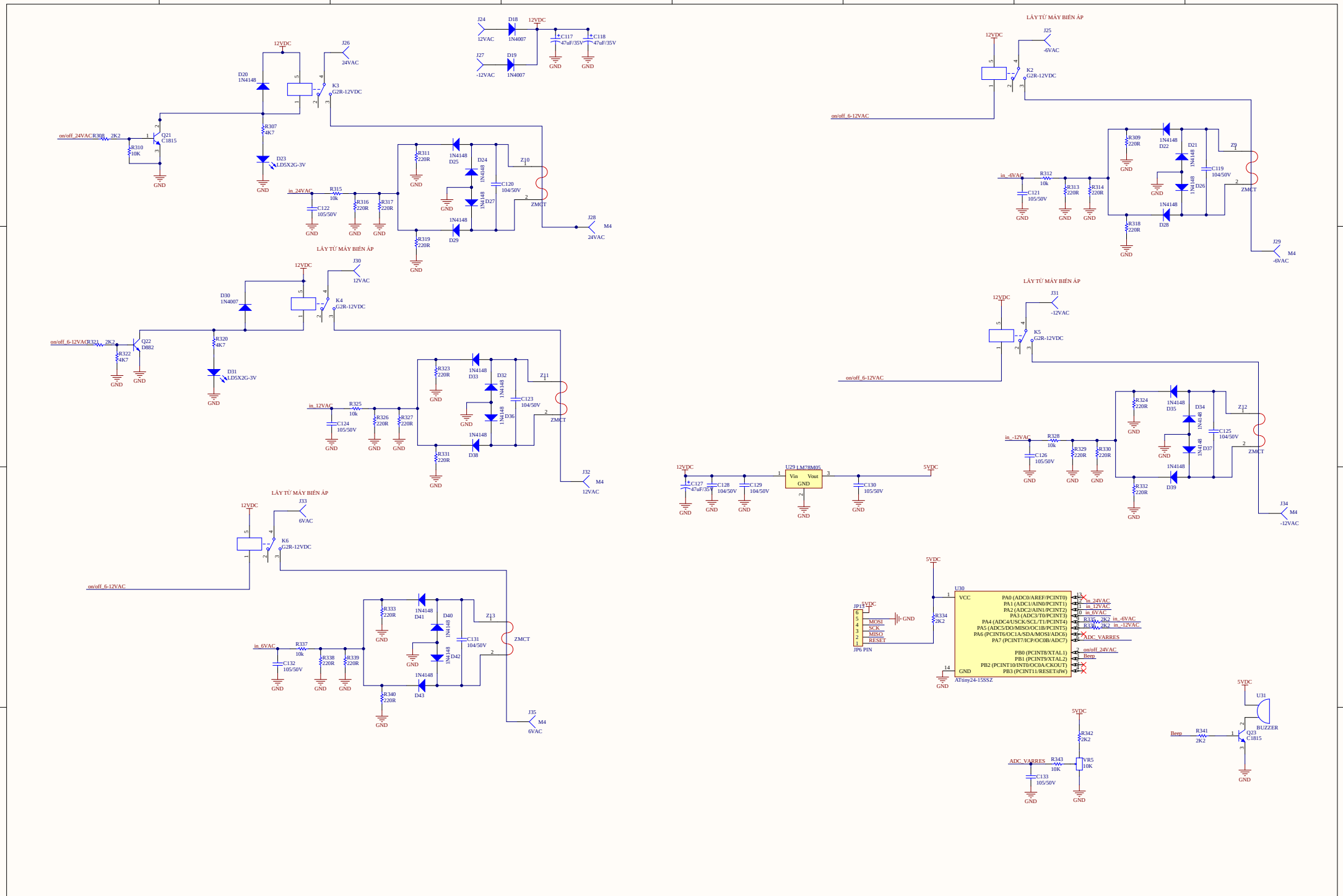

Title			Altium Limited L3, 12a Rodborough Rd Frenchs Forest NSW Australia 2086
Size: A3	Number:	Revision:	
Date: 26/10/2018	Time: 7:08:29 CH	Sheet of	

File: D:\Mydata\Work\Tan Phat\Bien doi nguon 3 phase\File nguyen ly boc tach\AC power Supply Fix 12V6V0V6V12V24V (MCU + Protect).SchDoc