Spring 2026

46705 Power Grid Analysis

Assignment 3: Security Analysis and Protection

Issued: 14/04/2026

Submission date: 08/05/2026

In this assignment you will work in small groups to extend the implemented Python code from Assignment 1 to conduct a steady-state security analysis of the system you already implemented in Assignment 1. In addition, you will design a protection system. The goals of the assignment are to:

- Explain the concept of power system security and describe how security assessment is performed in modern power system control centers, including the roles of monitoring, analysis, and control.
- Implement a steady-state contingency (N–1) security analysis for a transmission system by extending an existing power flow program, and automatically detect violations of operational limits.
- Interpret contingency analysis results and assess system security by identifying critical outages, voltage violations, thermal overloads, and loss of load-flow convergence.
- Propose and evaluate corrective actions (e.g. generator redispatch, voltage setpoint adjustment, transformer tap changes) to mitigate security violations and improve N–1 robustness.
- Design a protection system for a transmission network by defining protection zones and selecting suitable primary protection principles for generators, transformers, buses, and lines.
- Design and justify protection relay settings for overcurrent and distance protection, including pickup currents, impedance zones, and coordination with backup protection.
- Analyze the interaction between protection design and system security, including the effects of protection coordination, and breaker failure on system integrity and service continuity.

You should be able to already solve Part A, Part B and Part C after the security analysis lecture. You should also be able to start Part D after the first protection lecture.

Test System

In this case study you will analyse the same transmission system studied in Assignment 1 and Assignment 2. Additional data is provided in order for you to be able to perform the security analysis and design the protection scheme.

Table 1: System parameters and limits.

Generator Ratings
G_1: $100\,\text{MVA}$, $13.8\,\text{kV}$, $x'' = 0.12\,\text{p.u.}$, $x_1 = x_2 = 0.14\,\text{p.u.}$, $x_0 = 0.05\,\text{p.u.}$, $-43.5\,\text{MVAr} \leq Q_{G1} \leq 43.5\,\text{MVAr}$
G_2: $200\,\text{MVA}$, $15\,\text{kV}$, $x'' = 0.12\,\text{p.u.}$, $x_1 = x_2 = 0.14\,\text{p.u.}$, $x_0 = 0.05\,\text{p.u.}$, $-87\,\text{MVAr} \leq Q_{G2} \leq 87\,\text{MVAr}$
Generators are Y-connected with their neutrals solidly grounded.
Transformer Ratings
T_1: $100\,\text{MVA}$, $13.8\,\text{kV}\Delta/\ 230\,\text{kV}$Y, $x = 0.1\,\text{p.u.}$
T_2: $200\,\text{MVA}$, $15\,\text{kV}\Delta/230\,\text{kV}$Y, $x = 0.1\,\text{p.u.}$
Transformer neutrals are solidly grounded.
Transmission Line Ratings
All lines: $230\,\text{kV}$, $z_1' = (0.08 + j0.5)\Omega\,\text{km}^{-1}$, $y_1' = j3.3\mu\text{S}\,\text{km}^{-1}$
$\underline{z}_0' = (0.2+j1.5)\Omega\,\text{km}^{-1}$ Maximum Loading: $400\,\text{MVA}$
Line lengths ℓ are provided in the single line diagram. x corresponds to the number of your group.
Power Flow Data
Bus 1: Swing bus $V_1 = 13.8\,\text{kV}\angle 0°$
Bus 2,3,4,5,6: Load buses
Bus 7: Constant voltage magnitude bus
$V_7 = 15\,\text{kV}$
Generators G_1 and G_2 share active power according to the ratio of their nominal capacities.
Voltage limits: ± 0.05 p.u.
System Base Quantities
$S_{base} = 100\,\text{MVA}$ (Three-phase)
$V_{base} = 13.8\,\text{kV}$ (line-to-line) in the zone of G1

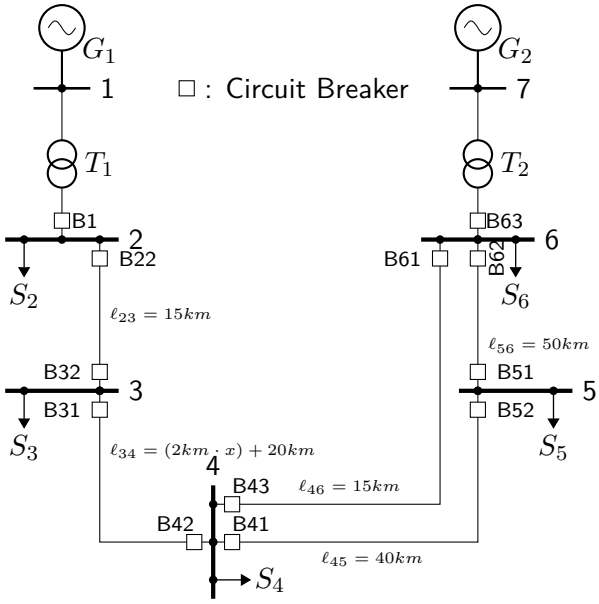

Figure 1: Single line diagram of the three phase transmission system.

Table 2: Operating points.

High Loading Point (Operating Point A)
$S^a = S_2^a = S_3^a = S_4^a = S_5^a = S_6^a = 50\,\text{MW}+\text{j}\,30\,\text{MVAr}$
Low Loading Condition (Operating Point B)
At every node, the apparent power for condition B is calculated as $S^b = c \cdot S^a$ with : $c = [0.2 + (x-1) \cdot 0.01]$ and x is your group number.

Part A: Extend Python Code for Security Analysis

The purpose of this part of the assignment is to create a Python program that carries out a contingency analysis of a given system. To achieve this, you will need to extend your Python code from Assignment I and Exercise I as well as creating new functions for the contingency analysis. The core idea behind the Python program that carries out the contingency analysis is depicted as a flow-diagram in Figure 2. Code 1 shows an example script which has implemented some of the steps in the figure. The functions marked in red represent the functions and libraries you will need to write or modify.

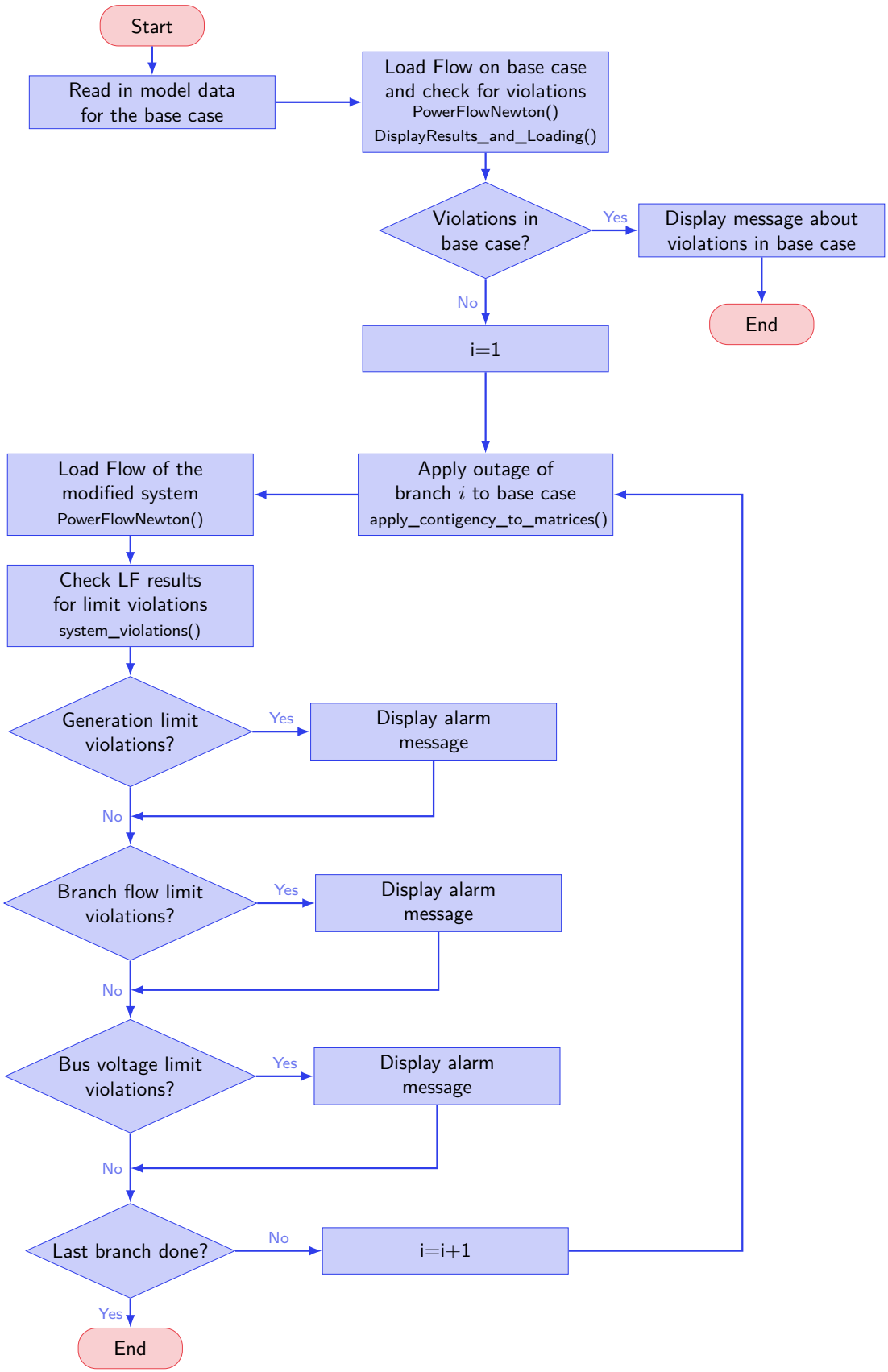

Figure 2: Flow-diagram for a proposed structure of the contingency analysis program to be created in this assignment.

```python
import numpy as np
import PowerFlow_46705 as pf  # import Power Flow functions
import LoadNetworkData as lnd     # load the network data to global variables
max_iter = 30   # Iteration settings
err_tol = 1e-3
# Load the Network data ...
filename = "./TestSystem4SA.txt"
lnd.LoadNetworkData(filename) # makes Ybus available as lnd.Ybus etc.
##############################################################
#   Part I:  Study the base case and display results (with % loading) #
##############################################################
# Carry out load flow of the base case.....
V,success,n = pf.PowerFlowNewton(lnd.Ybus,lnd.Sbus,lnd.V0,lnd.pv_index,lnd.pq_index,max_iter,err_tol)
if success: # Display results if the power flow analysis converged
    pf.DisplayResults_and_loading(V,lnd)
##############################################################
#    Part II: Simplified contingency analysis (only branch outages)
##############################################################
print('*'*50)
print('*              Contingency Analysis                *')
print('*'*50)
for i in range(len(lnd.br_f)): #sweep over branches
fr_ind = lnd.br_f[i]
to_ind = lnd.br_t[i]
br_ind = i
Ybr_mat = lnd.br_Ymat[i]
Ybus_mod,Yfr_mod,Yto_mod = apply_contingency_to_Y_matrices(lnd.Ybus,lnd.Y_fr,lnd.Y_to,fr_ind,to_ind,br_ind,Ybr_mat)
str_status = '-'*63 + 'Tripping of branch {:} (bus {:} - bus{:})'
str_status = str_status.format(i+1,lnd.ind_to_bus[fr_ind],lnd.ind_to_bus[to_ind])
try:    # Carry out load flow of the base case.....
V,success,n = pf.PowerFlowNewton(Ybus_mod,lnd.Sbus,lnd.V0,lnd.pv_index,lnd.pq_index,max_iter,err_tol,print_progress=False)
except:
str_ = ' --> Load Flow error (Jacobian) when branch {:} (bus {:} - bus {:}) is tripped'
str_ = str_.format(i+1,lnd.ind_to_bus[fr_ind],lnd.ind_to_bus[to_ind])
print(str_status+ ' [CONVERGENCE ISSUES!]')
print(str_)
else:
if success: # Display results if the power flow analysis converged
violations = System_violations(V,Ybus_mod,Yfr_mod,Yto_mod,lnd)
if not violations: #no violations, print status and move on
print(str_status + ' [OK!]')
else: # if violation, display them
print(str_status + ' [Violations!]')
for str_ in violations:
    print(str_)
else: #no convergence...
str_ = ' --> No load-flow convergence when branch {:} (bus {:} - bus {:}) is tripped'
str_=str_.format(i+1,lnd.ind_to_bus[fr_ind],lnd.ind_to_bus[to_ind])
print(str_status + ' [CONVERGENCE ISSUES!]')
print(str_)
```

Code 1: Example script for carrying out contingency analysis in Python. The functions or library colored in red are the one you need to create/modify compared to Assignment I.

1. Key Functions of Power System Security Assessment

Briefly describe the concept of power system security and describe how the security assessment can be broken down into three major functions that are carried out in system operators' control centers.

2. Change Code Output

Modify your previous `DisplayResults()` function in such a way that it shows the loading levels of the generators (in respect to their MVA rating) and branches in percentages (the modified function is called `DisplayResults_and_loading()`). Furthermore, extend the function such that it can appropriately handle generation and load connected to one bus. The output from the modified function could resemble the one shown in Code 2.

```
================================================================================
 Bus results
================================================================================
Bus             Bus Voltage      Generation              Load
nr    Label     Mag(pu) Ang(deg) P (pu) Q(pu)    loading P (pu)  Q(pu)
----- --------- ------- ------- ------- -------- ------- ------- -------
1011  BUS1011   0.989   1.02    -       -        -       2.000   0.800
1012  BUS1012   1.000   4.80    6.000   1.851    78.49%  3.000   1.000
1013  BUS1013   1.000   9.76    3.000   0.808    51.78%  1.000   0.400
1014  BUS1014   1.000   13.14   5.500   -0.543   78.95%  -       -
........ and so on ..........
==========================================================================
 Branch flow
==========================================================================
Branch From To    From Bus Injection       To Bus Injection
nr    Bus   Bus   P (pu)  Q (pu)   loading P (pu)  Q (pu)  loading
----- ----- ----- ------- -------- ------- ------- ------- -------
1     1011  1013  -2.103  0.296    42.47%  2.149   0.013   42.98%
2     1011  1013  -2.103  0.296    42.47%  2.149   0.013   42.98%
3     1012  1014  -1.556  0.351    31.89%  1.591   -0.139  31.95%
4     1012  1014  -1.556  0.351    31.89%  1.591   -0.139  31.95%
........ and so on ..........
```

Code 2: Example showing which type of information could be printed out automatically when the modified function `DisplayResults_and_loading()` is called.

3. Check for System Violations

Write the function `System_violations()` that automatically investigates whether any power flow limits or voltage limits have been violated. The function should return a list of strings that describe the found violations. Code 3 shows a template for the function.

```python
def System_violations(V,Ybus,Y_from,Y_to,lnd):
# Inputs:
# V = results from the load flow
# Ybus = the bus admittance matrix used in the load flow
# Y_from,Y_to = the admittance matrices used to determine the branch flows
# lnd = the LoadNetworkData object for easy access to other model data

#store variables as more convenient names
br_f=lnd.br_f; br_t=lnd.br_t;   #from and to branch indices
ind_to_bus=lnd.ind_to_bus;      # the ind_to_bus mapping object
bus_to_ind=lnd.bus_to_ind;      # the bus_to_ind mapping object
br_MVA = lnd.br_MVA             # object containing the MVA ratings of the branches
br_id  = lnd.br_id              # (you have to update LoadNetworkData for this)


#line flows and generators injection....
S_to = V[br_t]*(Y_to.dot(V)).conj()         # the flow in the to end..
S_from = V[br_f]*(Y_from.dot(V)).conj()     # the flow in the from end
S_inj = V*(Ybus.dot(V)).conj()              # the injected power
SLD=lnd.S_LD                                # The defined loads on the PQ busses
S_gen = S_inj + SLD                         # the generator arrays

gen_ind = np.where(lnd.buscode>1)[0] #find the generator nodes
gen_str = ' --> Generator at bus {:} overloaded ({})'
violations = []

##############################################################################
# YOUR CODE COMES HERE:
# 1. Check flow in all branches (both ends) and report if limits are violated
# 2. Check output of all generators and see if limits are exceeded
# 3. Check voltages on all busses and see if it remains within pre-defined bounds
##############################################################################
return violations #return the list with description of all of the violations
```

Code 3: Template for the function `System_violations()`.

4. Changes in Admittance Matrices

Write the function `apply_contingency_to_Y_matrices()` which takes as input the original admittance matrices (Ybus,Y_fr and Y_to) and returns the modified version of those matrices where the contingency (branch tripping) has been applied. A template for the function is provided in Code 4.

```python
def apply_contingency_to_Y_matrices(Ybus,Yfr,Yto,fr_ind,to_ind,br_ind,Ybr_mat):
# input:
# The original admittance matirces: Ybus,Yfr,Yto
# The from and to end indices for the branch (fr_ind, to_ind)
# The indice for where the branch is in the branch list (br_ind)
# The 2x2 admittance matrix for the branch Ybr_mat
##########################################################
# This is important, you must copy the original matrices
Ybus_mod = Ybus . copy ( ) # otherwise you will change the original Ybus matrix
Yfr_mod = Yfr . copy ( ) # when ever you make changes to Ybus_mod
Yto_mod = Yto . copy ( ) # using the .copy() function avoids this
##################################################################################
# YOUR CODE COMES HERE:
# 1. Remove the branch from the Ybus_mod matrix
# 2. Remove the branch from the Yto and Yfr matrices
##################################################################################
return Ybus_mod, Yfr_mod, Yto_mod
```

Code 4: Template for the function `apply_contingency_to_Y_matrices()`.

Part B: Perform Security Analysis of a Small Test System

In this part of the assignment, you will use the developed code from Part A and conduct a contingency analysis for your test system. The goal is to assess the N-1 security of the system and suggest measures to improve it.

5. **Intuition: Impact of Line Trippings**
   Before running any analysis, which line trippings do you expect to be more and less critical for the provided test system? Which line trippings can potentially be survived by the system? Which ones probably cannot? No simulations are required for this task.

6. **Intuition: Impact of Generator Outages**
   Do you expect the system to be secure against generator outages for both loading conditions? For which loading conditions do you expect overloadings or voltage violations? No simulations are required for this task.

7. **Intuition: Impact of Loading Conditions**
   How do you expect the loading condition, e.g. Operating Point A or B, to impact the N-1 security agains line outages? Which one is the more challenging condition, and why?

8. **Add a Transmission Line**
   Generally, we design transmission systems such that they remain interconnected for any line outage. To achieve this with the provided test system, you are allowed to build **one** additional transmission line. The line parameters are the same as provided in Table 1. The distances between all nodes are provided in Table 3. Complete the following tasks:

   (a) **Topology Reasoning:** What are all possible connections of lines that will potentially make the system N-1 secure against line outages? In other words, which are all possible options where the addition of one line would not cause the system to split into two parts for all N-1 line outages? No simulations are required to answer this question.

   (b) **Base-Case Comparison:** Compare the base case power flow results for the identified added lines. Which one improves the base case the most?

   (c) **Contingency Ranking:** For the one line that had the largest improvements on the base case power flow, run the contingency analysis for both operating conditions of the test system. Compute the line flow performance index and voltage performance index defined in class for all contingencies and rank them accordingly. Choose n and m and explain your choice. Is the system N-1 secure for both operating conditions? If not, which one is the most critical condition and contingency?

   (d) **Maximum Loading:** What is the maximum loading in % for which the updated system is N-1 secure against line outages? Consider only line outages, not transformer outages.

Table 3: Node distances.

From / To	Bus 2	Bus 3	Bus 4	Bus 5	Bus 6
Bus 2	-	$15\,\mathrm{km}$	$40\,\mathrm{km}$	$100\,\mathrm{km}$	$60\,\mathrm{km}$
Bus 3	$15\,\mathrm{km}$	-	$(2\,\mathrm{km} \cdot x) + 20\,\mathrm{km}$	$40\,\mathrm{km}$	$120\,\mathrm{km}$
Bus 4	$40\,\mathrm{km}$	$(2\,\mathrm{km} \cdot x) + 20\,\mathrm{km}$	-	$50\,\mathrm{km}$	$110\,\mathrm{km}$
Bus 5	$100\,\mathrm{km}$	$40\,\mathrm{km}$	$50\,\mathrm{km}$	-	$50\,\mathrm{km}$
Bus 6	$60\,\mathrm{km}$	$120\,\mathrm{km}$	$110\,\mathrm{km}$	$50\,\mathrm{km}$	-

Part C: Security Analysis of a Large Transmission System

So far, we have only studied a smaller test system. The purpose of this part of the Assignment is to perform a security analysis for a larger, well-known test system: The 32-bus Nordic system detailed in Figure 3. Your task is to perform a N-1 security analysis and to try to resolve N-1 congestion issues for one selected case.

Note that all system files are already available and you do not need formulate the data file. You should be able to run the analysis of this test system with your code developed in Part A of this assignment.

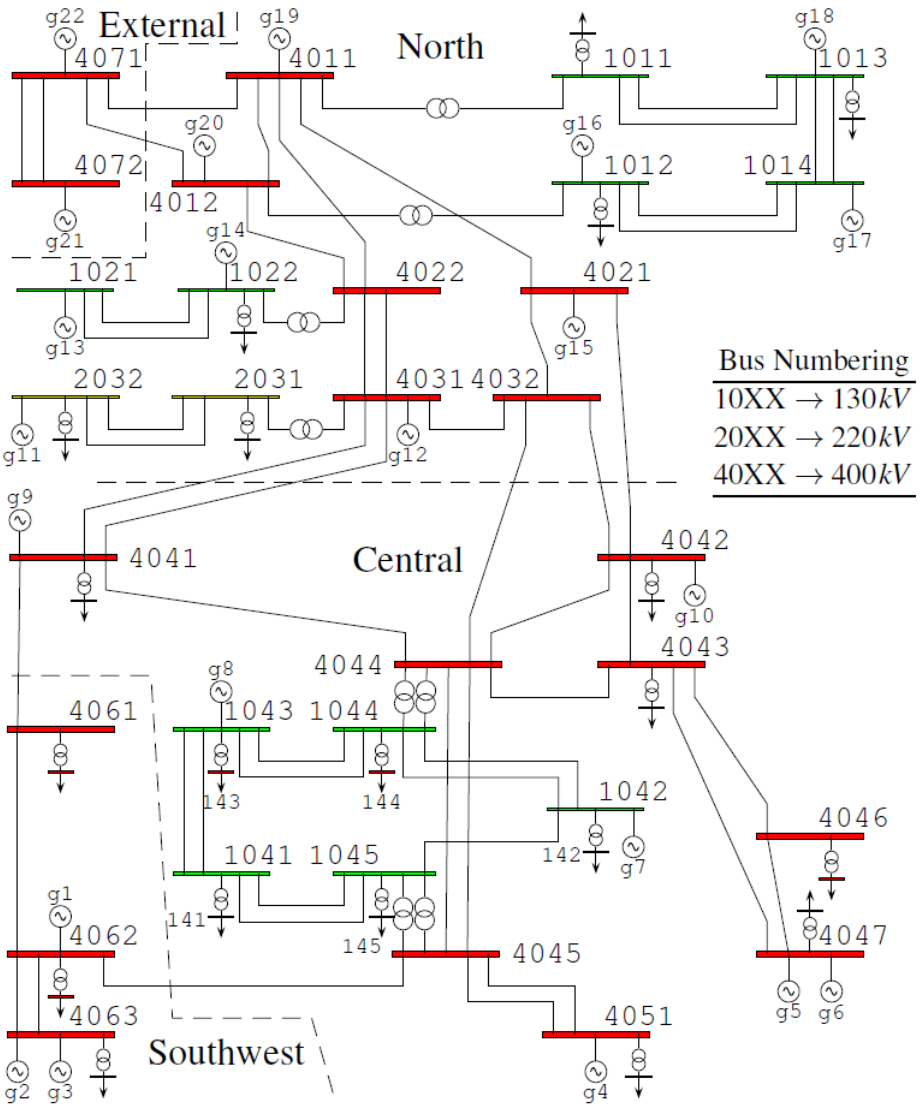

Figure 3: Single line diagram of the Nordic 32 bus test system.

9. Prepare Nordic32 System Studies

Load the Nordic32 model and run the load flow. Examine whether there are any line flow or voltage violations in the base case.

10. Perform Contingency Analysis

Run the contingency analysis for all line outages and study the results. Provide the following:

(a) Evaluate and rank all contingencies using the line flow and voltage perfomance indices. Choose the exponents n and m. State and justify your choice. Which are the worst 3 contingencies?

(b) Provide an example of one contingency that is secure.

(c) Provide an example of one contingency that results in a voltage limit violation.

(d) Provide an example of one contingency that results in no load-flow convergence.

11. Improve System Performance

Pick one of the scenarios from Question 9 that was causing violations and try to fix the problem. You are allowed to change generator voltage setpoints, redispatch active power generation, and adjust transformer taps (assume a range of ± 0.05p.u. for all transformers). Briefly describe the measures that were successful.

12. Key Findings for Security Analysis

Summarize your key learnings in the area of security analysis of small and large test systems. How should such analysis be performed? Which are the most critical contingencies that you observed? Which actions are potentially most useful to achieve N-1 security? Which actions should not be taken as they could worsen the situation?

Part D: Protection Design

The design of the protection in more general system configurations involves dividing the system into protection zones. The protection zones are defined by the equipment available and the available circuit breakers. In this part of the exercise, you will design different protection schemes for the test system provided in Figure 1.

13. Protection Zones

Define the protection zones for the test system shown in Figure 1. For each zone select and clearly identify:

- the protected element
- the primary protection principle, e.g. overcurrent, distance, differential

Explain your choices, especially for the selected protection principle per zone, and include a diagram showing the protection zones in your report. Furthermore, explain how the overlap of zones is accomplished in practice.

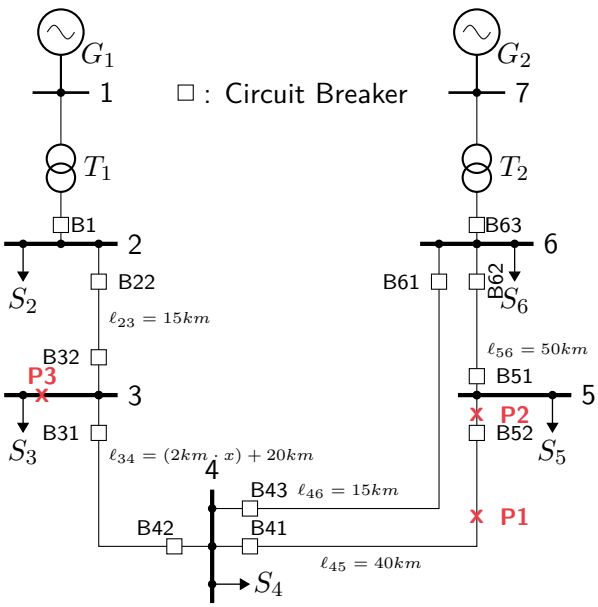

Figure 4: Fault locations.

14. Circuit Breaker Operation

Considering your designed protection zones, determine which circuit breakers should open for which fault indicated in Figure 4. The faults occur at the locations P1, P2 and P3.

15. Design a Distance Relay

We now design a distance relay for breaker B31 in the system depicted by Figure 1. Complete the following steps:

(a) Describe the basic principle of distance relays and explain the difference between impedance and mho relays.

(b) Select suitable CT and VT transformers for the location at B31, by choosing appropriate transformation ratios that will result in the range of standardized voltages and currents for measurements. The transmission rations detailed in Table 4. We aim to achieve a secondary line-to-line voltage of $115\,\mathrm{V}$, and a standardized nominal secondary line current of $1\,\mathrm{A}$.

(c) Determine appropriate relay settings for a three-zone directional impedance relay for a three-zone impedance relay connected at B31. The positive sequence impedances of all the lines

are provided in Table 1. Report the impedance values in Ω for each zone Z_{z1}, Z_{z2} and z_{z3} of the directional impedance relay as seen by the relay.

(d) Draw the characteristics for the three zones for a mho relay and an impedance relay with directional restraint. Use the same relay settings as determined in the previous subquestion. Add the oparting point corresponding to an emergency loading of $4000\,\mathrm{A}$ (per phase) at a lagging power factor of 0.95 at nominal voltage to your drawings. Will any of the relays trip during these emergency conditions?

Table 4: Standard VT and CT Transmission Ratios.

VT Ratios		**CT Ratios**		
1:1	200:1	50:5	600:6	2500:5
2:1	300:1	100:5	800:5	3000:5
2.5:1	400:1	150:5	900:5	3200:5
4:1	600:1	200:5	1000:5	4000:5
5:1	800:1	250:5	1200:5	5000:5
20:1	1000:1	300:5	1500:5	6000:5
40:1	2000:1	400:5	1600:5	
60:1	3000:1	450:5	2000:5	
100:1	4500:1	500:5	2400:5	

16. Key Findings for Protection Systems

Reflect on your key learnings regarding power system protection. How do you advise an operator to compromise the five performance criteria? How should protection systems be parameterized?

Guidelines for Report Writing

When writing the report for the assignment, the below listed points should be followed:

- The report must start with a self-evaluation section, where the authors state whether the report represents an even contribution from all group members or whether some participants were not effectively contributing to the report. All group members must sign the self-evaluation section.
- The report must contain a section informing about the AI policy of the group, and the usage of AI in completing the assignment and the report. All group members must sign the declaration of the usage of AI.
- The front page of the report should contain your names and student numbers.
- Your Python code used for the solution of this assignment has to be included in appendix.
- The report shall contain the answer to each of the questions. The answers shall be clearly separated from each other and come in the same order as the questions in the assignment. It is not necessary to repeat the text from the assignment in your report.
- When answering the questions, both the results as well as an explanation on how you came up with your results should be included in the answer.
- Always when asked to provide plots of something (time responses, curves etc.) you must provide your interpretation of the figure.
- Make sure that the assignment's learning objectives are reflected in your report.
- When your reports are evaluated, points are awarded for the general setup of the report. We are looking for a professional look of the report, where among others the following is considered:
  - Readability (appropriate font sizes, margins etc.) and consistence in styles applied (same look for body text, headings, captions etc. throughout the report).
  - Presentation of equations should be of an appropriate quality (do not copy/paste equations as screenshot pictures from the lecture handouts).
  - Plots and figures should be of good quality (no fuzzy looking screenshots in the report). You can always ask the teachers how you can export figures of good quality in Python/-Matlab.
  - Figures and tables must have a label and caption (e.g. Figure 1: plot of active power in respect to ....).
  - If you are citing external material, you need to include a properly set-up reference list (you can use any citation style you prefer).
  - Does the report contain a conclusion section?
- You will also be awarded points for the general formulation of the report where focus is on:
  - The flow in the text when explaining how you came up with your answers and correct use of relevant terminology.
  - Interpretation and reflection of results when appropriate.
  - Grammar and spelling.

Guidelines for the Upload of the Report and the Python Code

The report submission is carried out on DTU-LEARN where the following shall be uploaded:

- PDF version of your report, with your Python code in appendix.
- Your Python code used for solving the assignment (the *.py). The code shall include your comments where you explain the meaning behind the code.