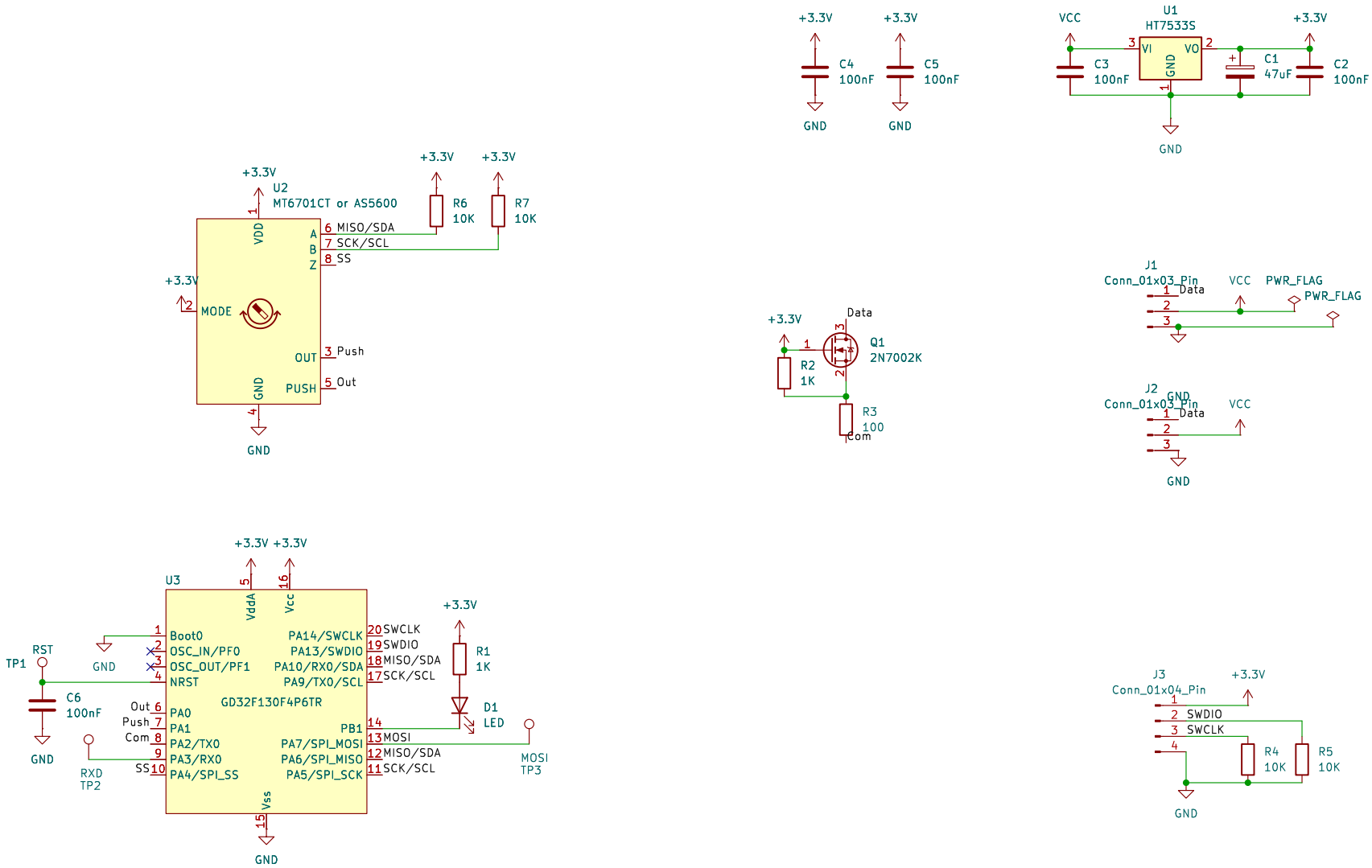

H1
MountingHole

H2
MountingHole

Sheet: /
File: gd32_encoder.kicad_sch

Title:

Size: A4	Date:	Rev:
KiCad E.D.A. 8.0.5		Id: 1/1