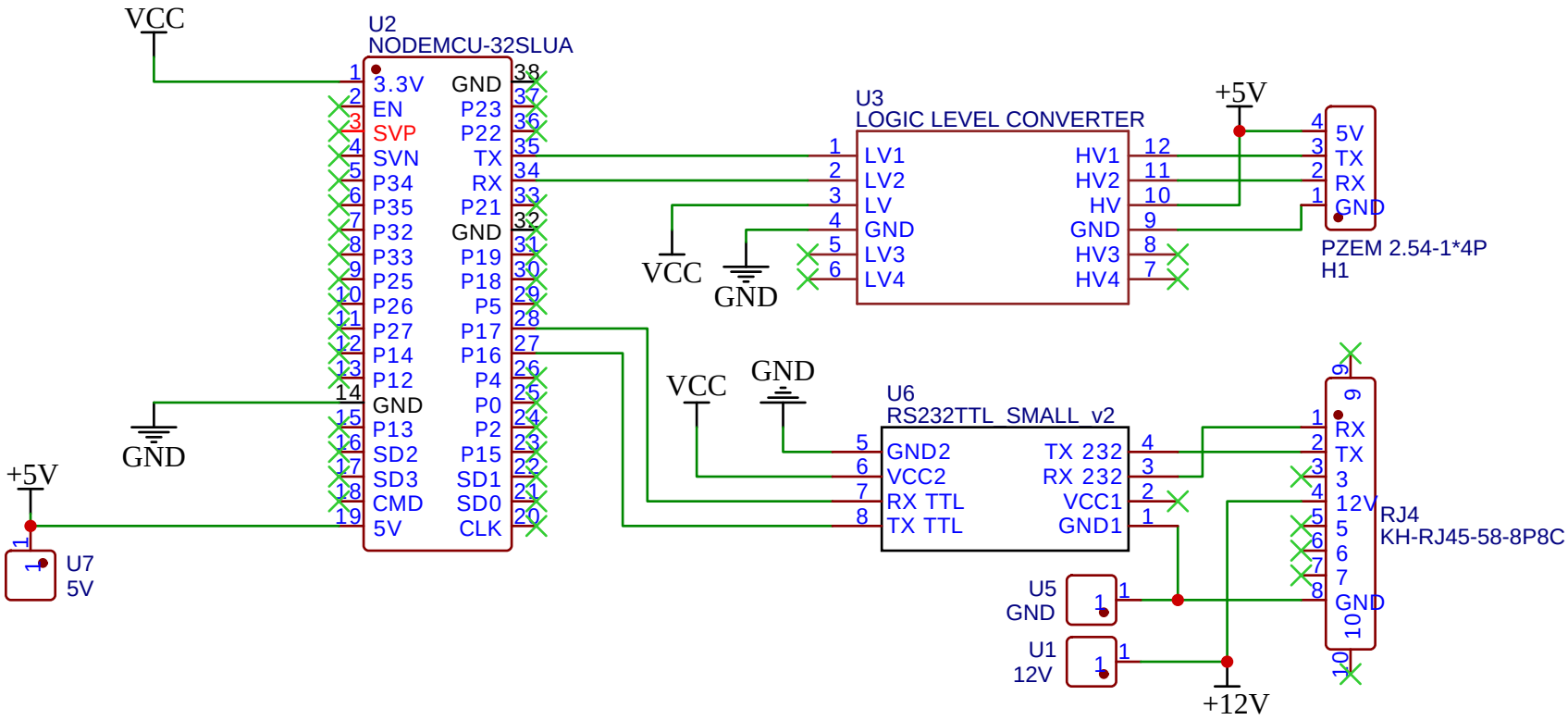

TITLE: ESPHome PowMr Inverter		REV: 1.2
嘉立创EDA	Company: Your Company	Sheet: 1/1
	Date: 2023-07-14 Drawn By: Andrey Ganzevich	

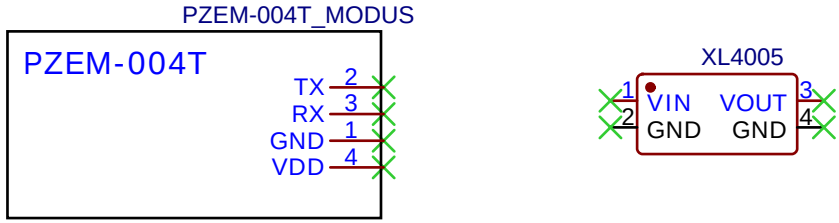

TITLE: Modules		REV: 1.0
EasyEDA	Company: Your Company	Sheet: 1/1
	Date: 2023-09-29 Drawn By: odya-kun	