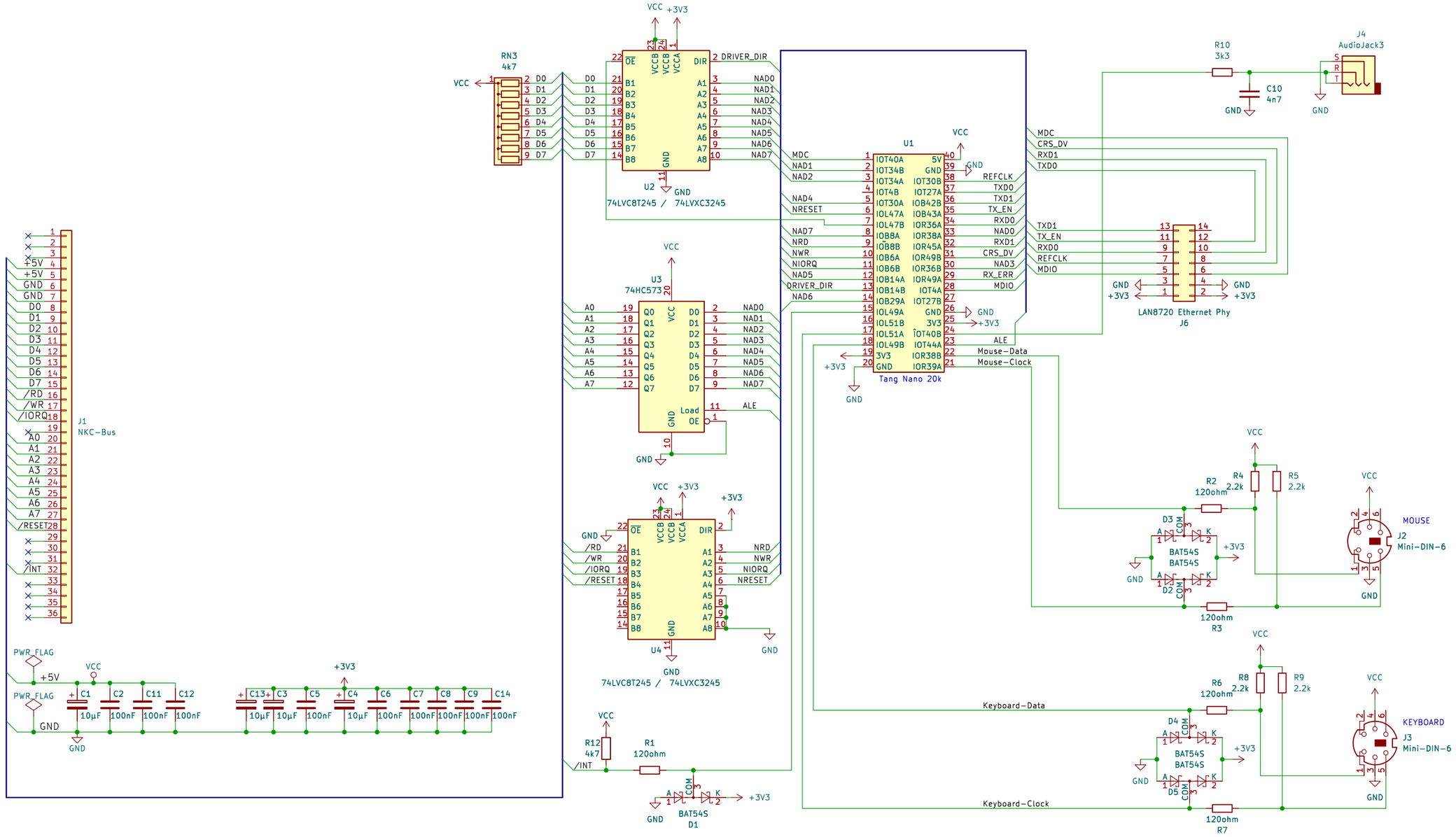

Andreas Voggeneder

Sheet: /

File: gdp.kicad_sch

Title: Tang Nano SOC

Size: A3	Date: 23.09.2024	Rev: 2.0
KiCad E.D.A. 9.0.3		Id: 1/1