I^2C-Master Core Specification

Author: Richard Herveille
rherveille@opencores.org

Rev. 0.9
March 8, 2026

This page has been intentionally left blank

Revision History

Rev.	Date	Author	Description
0.1	17/02/01	Richard Herveille	First draft release
0.2	01/03/01	Richard Herveille	Some cleaning up throughout the document Added 'Programming Examples' section
0.3		Richard Herveille	Added some comments after core-changes - added BUSY bit (status register) - changed I2C IO for ASIC support - added comment for FGPA IO
0.4	10/19/01	Richard Herveille	Changed core's databus size to 8bit. Changed documentation to reflect changes. Changed port names to new naming convention.
0.5	18/02/02	Richard Herveille	Changed table headers. Added OpenCores logo.
0.5a	05/02/02	Richard Herveille	Reviewed entire document.
0.6	21/03/02	Richard Herveille	Added Appendix A, Synthesis Results
0.7	25/06/02	Richard Herveille	Changed Prescale Register formula
0.8	30/12/02	Richard Herveille	Added Multi-Master capabilities. New timing diagrams.
0.9	03/07/03	Richard Herveille	Changed '0x5C' to '0xAC' in Example1. Changed 'RW' to 'W' in Command Register. Changed 'RW' to 'W' in Transmit Register.
1.0	08/03/26	Andreas Voggeneder	Reordered Register for NKC

1 Introduction

I²C is a two-wire, bi-directional serial bus that provides a simple and efficient method of data exchange between devices. It is most suitable for applications requiring occasional communication over a short distance between many devices. The I²C standard is a true multi-master bus including collision detection and arbitration that prevents data corruption if two or more masters attempt to control the bus simultaneously.

The interface defines 3 transmission speeds:
- Normal: 100Kbps
- Fast: 400Kbps
- High speed: 3.5Mbps

Only 100Kbps and 400Kbps modes are supported directly. For High speed special IOs are needed. If these IOs are available and used, then High speed is also supported.

FEATURES

- **Compatible with Philips I²C standard**
- **Multi Master Operation**
- **Software programmable clock frequency**
- **Clock Stretching and Wait state generation**
- **Software programmable acknowledge bit**
- **Interrupt or bit-polling driven byte-by-byte data-transfers**
- **Arbitration lost interrupt, with automatic transfer cancelation**
- **Start/Stop/Repeated Start/Acknowledge generation**
- **Start/Stop/Repeated Start detection**
- **Bus busy detection**
- **Supports 7 and 10bit addressing mode**
- **Operates from a wide range of input clock frequencies**
- **Static synchronous design**
- **Fully synthesizable**

2

IO ports

2.1 Core Parameters

Parameter	Type	Default	Description
ARST_LVL	Bit	1'b0	Asynchronous reset level

2.1.1 ARST_LVL

The asynchronous reset level can be set to either active high (1'b1) or active low (1'b0).

2.2 WISHBONE interface signals

Port	Width	Direction	Description
wb_clk_i	1	Input	Master clock
wb_rst_i	1	Input	Synchronous reset, active high
arst_i	1	Input	Asynchronous reset
wb_adr_i	3	Input	Lower address bits
wb_dat_i	8	Input	Data towards the core
wb_dat_o	8	Output	Data from the core
wb_we_i	1	Input	Write enable input
wb_stb_i	1	Input	Strobe signal/Core select input
wb_cyc_i	1	Input	Valid bus cycle input
wb_ack_o	1	Output	Bus cycle acknowledge output
wb_inta_o	1	Output	Interrupt signal output

The core features a WISHBONE RevB.3 compliant WISHBONE Classic interface. All output signals are registered. Each access takes 2 clock cycles.
arst_i is not a WISHBONE compatible signal. It is provided for FPGA implementations. Using [arst_i] instead of [wb_rst_i] can result in lower cell-usage and higher performance, because most FPGAs provide a dedicated asynchronous reset path. Use either [arst_i] or [wb_rst_i], tie the other to a negated state.

2.3 External connections

Port	Width	Direction	Description
scl_pad_i	1	Input	Serial Clock line input
scl_pad_o	1	Output	Serial Clock line output
scl_pad_oe	1	Output	Serial Clock line output enable
sda_pad_i	1	Input	Serial Data line input
sda_pad_o	1	Output	Serial Data line output
sda_pad_oe	1	Output	Serial Data line output enable

The I²C interface uses a serial data line (SDA) and a serial clock line (SCL) for data transfers. All devices connected to these two signals must have open drain or open collector outputs. Both lines must be pulled-up to VCC by external resistors.

The tri-state buffers for the SCL and SDA lines must be added at a higher hierarchical level. Connections should be made according to the following figure:

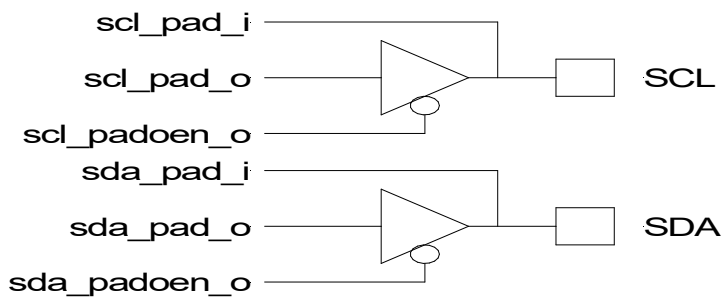

For FPGA designs the compiler can automatically insert these buffers using the following VHDL code:

```
scl <= scl_pad_o when (scl_padoen_oe = '0') else 'Z';
sda <= sda_pad_o when (sda_padoen_oe = '0') else 'Z';
scl_pad_i <= scl;
scl_pad_i <= sda;
```

Verilog code:

```
assign scl = scl_padoen_oe ? 1'bz : scl_pad_o;
assign sda = sda_padoen_oe ? 1'bz: sda_pad_o;
assign scl_pad_i = scl;
assign sda_pad_i = sda;
```

3

Registers

3.1 Registers list

Name	NKC IO-Address	Width	Access	Description
CR	0x08	8	RW	Command register
PRERlo	0x09	8	RW	Clock Prescale register lo-byte
PRERhi	0x0A	8	RW	Clock Prescale register hi-byte
CTR	0x0B	8	RW	Control register
TXR	0x0C	8	W	Transmit register
RXR	0x0D	8	R	Receive register
SR	0x0E	8	R	Status register

3.2 Register description

3.2.1 Prescale Register

This register is used to prescale the SCL clock line. Due to the structure of the I²C interface, the core uses a 5*SCL clock internally. The prescale register must be programmed to this 5*SCL frequency (minus 1). Change the value of the prescale register only when the 'EN' bit is cleared.

Example: wb_clk_i = 40MHz, desired SCL = 100KHz

$$prescale = \frac{40MHz}{5 * 100KHz} - 1 = 79(dec) = 46(hex)$$

Reset value: 0xFFFF

3.2.2 Control register

Bit #	Access	Description
7	RW	EN, I²C core enable bit. When set to '1', the core is enabled. When set to '0', the core is disabled.
6	RW	IEN, I²C core interrupt enable bit. When set to '1', interrupt is enabled. When set to '0', interrupt is disabled.
5:0	RW	*Reserved*

Reset Value: 0x00

The core responds to new commands only when the 'EN' bit is set. Pending commands are finished. Clear the 'EN' bit only when no transfer is in progress, i.e. after a STOP command, or when the command register has the STO bit set. When halted during a transfer, the core can hang the I^2C bus.

3.2.3 Transmit register

Bit #	Access	Description
7:1	W	Next byte to transmit via I^2C
0	W	In case of a data transfer this bit represent the data's LSB. In case of a slave address transfer this bit represents the RW bit. '1' = reading from slave '0' = writing to slave

Reset value: 0x00

3.2.4 Receive register

Bit #	Access	Description
7:0	R	Last byte received via I^2C

Reset value: 0x00

3.2.5 Command register

Bit #	Access	Description
7	W	STA, generate (repeated) start condition
6	W	STO, generate stop condition
5	W	RD, read from slave
4	W	WR, write to slave
3	W	ACK, when a receiver, sent ACK (ACK = '0') or NACK (ACK = '1')
2:1	W	*Reserved*
0	W	IACK, Interrupt acknowledge. When set, clears a pending interrupt.

Reset Value: 0x00

The STA, STO, RD, WR, and IACK bits are cleared automatically. These bits are always read as zeros.

3.2.6 Status register

Bit #	Access	Description
7	R	RxACK, Received acknowledge from slave. This flag represents acknowledge from the addressed slave. '1' = No acknowledge received '0' = Acknowledge received
6	R	Busy, I²C bus busy '1' after START signal detected '0' after STOP signal detected
5	R	AL, Arbitration lost This bit is set when the core lost arbitration. Arbitration is lost when: • a STOP signal is detected, but non requested • The master drives SDA high, but SDA is low. See *bus-arbitration* section for more information.
4:2	R	*Reserved*
1	R	TIP, Transfer in progress. '1' when transferring data '0' when transfer complete
0	R	IF, Interrupt Flag. This bit is set when an interrupt is pending, which will cause a processor interrupt request if the IEN bit is set. The Interrupt Flag is set when: • one byte transfer has been completed • arbitration is lost

Reset Value: 0x00

*Please note that all **reserved bits** are read as zeros. To ensure forward compatibility, they should be written as zeros.*

4

Operation

4.1 System Configuration

The I²C system uses a serial data line (SDA) and a serial clock line (SCL) for data transfers. All devices connected to these two signals must have open drain or open collector outputs. The logic AND function is exercised on both lines with external pull-up resistors.

Data is transferred between a Master and a Slave synchronously to SCL on the SDA line on a byte-by-byte basis. Each data byte is 8 bits long. There is one SCL clock pulse for each data bit with the MSB being transmitted first. An acknowledge bit follows each transferred byte. Each bit is sampled during the high period of SCL; therefore, the SDA line may be changed only during the low period of SCL and must be held stable during the high period of SCL. A transition on the SDA line while SCL is high is interpreted as a command (see START and STOP signals).

4.2 I²C Protocol

Normally, a standard communication consists of four parts:
1) START signal generation
2) Slave address transfer
3) Data transfer
4) STOP signal generation

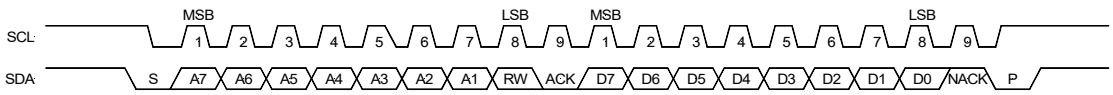

4.2.1 START signal

When the bus is free/idle, meaning no master device is engaging the bus (both SCL and SDA lines are high), a master can initiate a transfer by sending a START signal. A START signal, usually referred to as the S-bit, is defined as a high-to-low transition of SDA while SCL is high. The START signal denotes the beginning of a new data transfer. A Repeated START is a START signal without first generating a STOP signal. The master uses this method to communicate with another slave or the same slave in a

different transfer direction (e.g. from writing to a device to reading from a device) without releasing the bus.

The core generates a START signal when the STA-bit in the Command Register is set and the RD or WR bits are set. Depending on the current status of the SCL line, a START or Repeated START is generated.

4.2.2 Slave Address Transfer

The first byte of data transferred by the master immediately after the START signal is the slave address. This is a seven-bits calling address followed by a RW bit. The RW bit signals the slave the data transfer direction. No two slaves in the system can have the same address. Only the slave with an address that matches the one transmitted by the master will respond by returning an acknowledge bit by pulling the SDA low at the 9th SCL clock cycle.

Note: The core supports 10bit slave addresses by generating two address transfers. See the Philips I²C specifications for more details.

The core treats a Slave Address Transfer as any other write action. Store the slave device's address in the Transmit Register and set the WR bit. The core will then transfer the slave address on the bus.

4.2.3 Data Transfer

Once successful slave addressing has been achieved, the data transfer can proceed on a byte-by-byte basis in the direction specified by the RW bit sent by the master. Each transferred byte is followed by an acknowledge bit on the 9th SCL clock cycle. If the slave signals a No Acknowledge, the master can generate a STOP signal to abort the data transfer or generate a Repeated START signal and start a new transfer cycle.

If the master, as the receiving device, does not acknowledge the slave, the slave releases the SDA line for the master to generate a STOP or Repeated START signal.

To write data to a slave, store the data to be transmitted in the Transmit Register and set the WR bit. To read data from a slave, set the RD bit. During a transfer the core set the TIP flag, indicating that a Transfer is In Progress. When the transfer is done the TIP flag is reset, the IF flag set and, when enabled, an interrupt generated. The Receive Register contains valid data after the IF flag has been set. The user may issue a new write or read command when the TIP flag is reset.

4.2.4 STOP signal

The master can terminate the communication by generating a STOP signal. A STOP signal, usually referred to as the P-bit, is defined as a low-to-high transition of SDA while SCL is at logical '1'.

4.3 Arbitration Procedure

4.3.1 Clock Synchronization

The I²C bus is a true multimaster bus that allows more than one master to be connected on it. If two or more masters simultaneously try to control the bus, a clock synchronization procedure determines the bus clock. Because of the wired-AND connection of the I²C signals a high to low transition affects all devices connected to the bus. Therefore a high to low transition on the SCL line causes all concerned devices to count off their low period. Once a device clock has gone low it will hold the SCL line in that state until the clock high state is reached. Due to the wired-AND connection the SCL line will therefore be held low by the device with the longest low period, and held high by the device with the shortest high period.

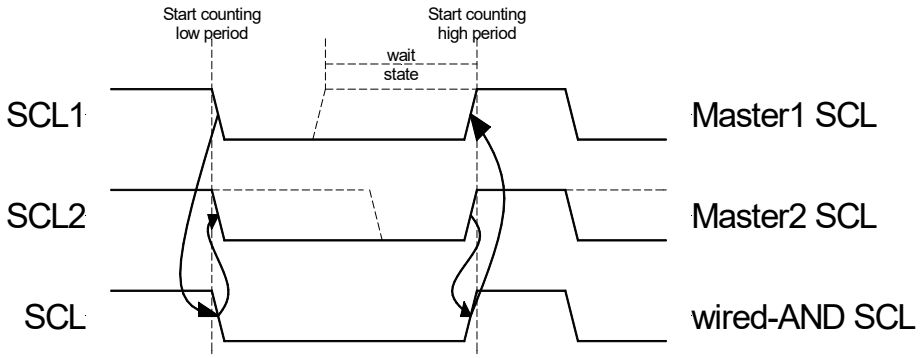

4.3.2 Clock Stretching

Slave devices can use the clock synchronization mechanism to slow down the transfer bit rate. After the master has driven SCL low, the slave can drive SCL low for the required period and then release it. If the slave's SCL low period is greater than the master's SCL low period, the resulting SCL bus signal low period is stretched, thus inserting wait-states.

5 Architecture

The I2C core is built around four primary blocks; the Clock Generator, the Byte Command Controller, the Bit Command Controller and the DataIO Shift Register. All other blocks are used for interfacing or for storing temporary values.

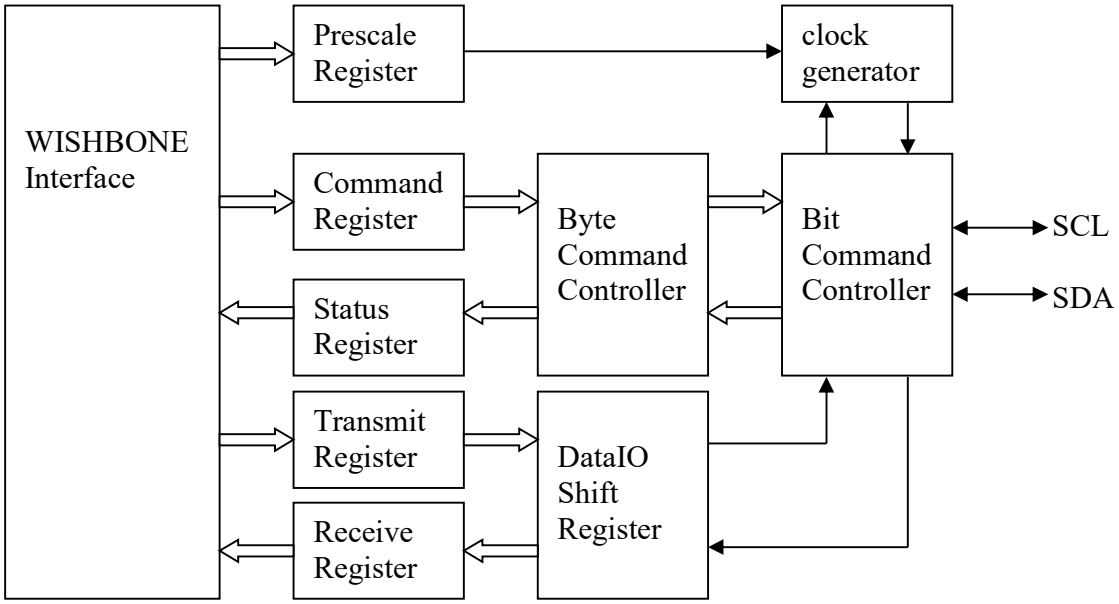

Fig. 5.1 Internal structure I2C Master Core

5.1 Clock Generator

The Clock Generator generates an internal 4*Fscl clock enable signal that triggers all synchronous elements in the Bit Command Controller. It also handles clock stretching needed by some slaves.

5.2 Byte Command Controller

The Byte Command Controller handles I2C traffic at the byte level. It takes data from the Command Register and translates it into sequences based on the transmission of a single byte. By setting the START, STOP, and READ bit in the Command Register, for example, the Byte Command Controller generates a sequence that results in the

generation of a START signal, the reading of a byte from the slave device, and the generation of a STOP signal. It does this by dividing each byte operation into separate bit-operations, which are then sent to the Bit Command Controller.

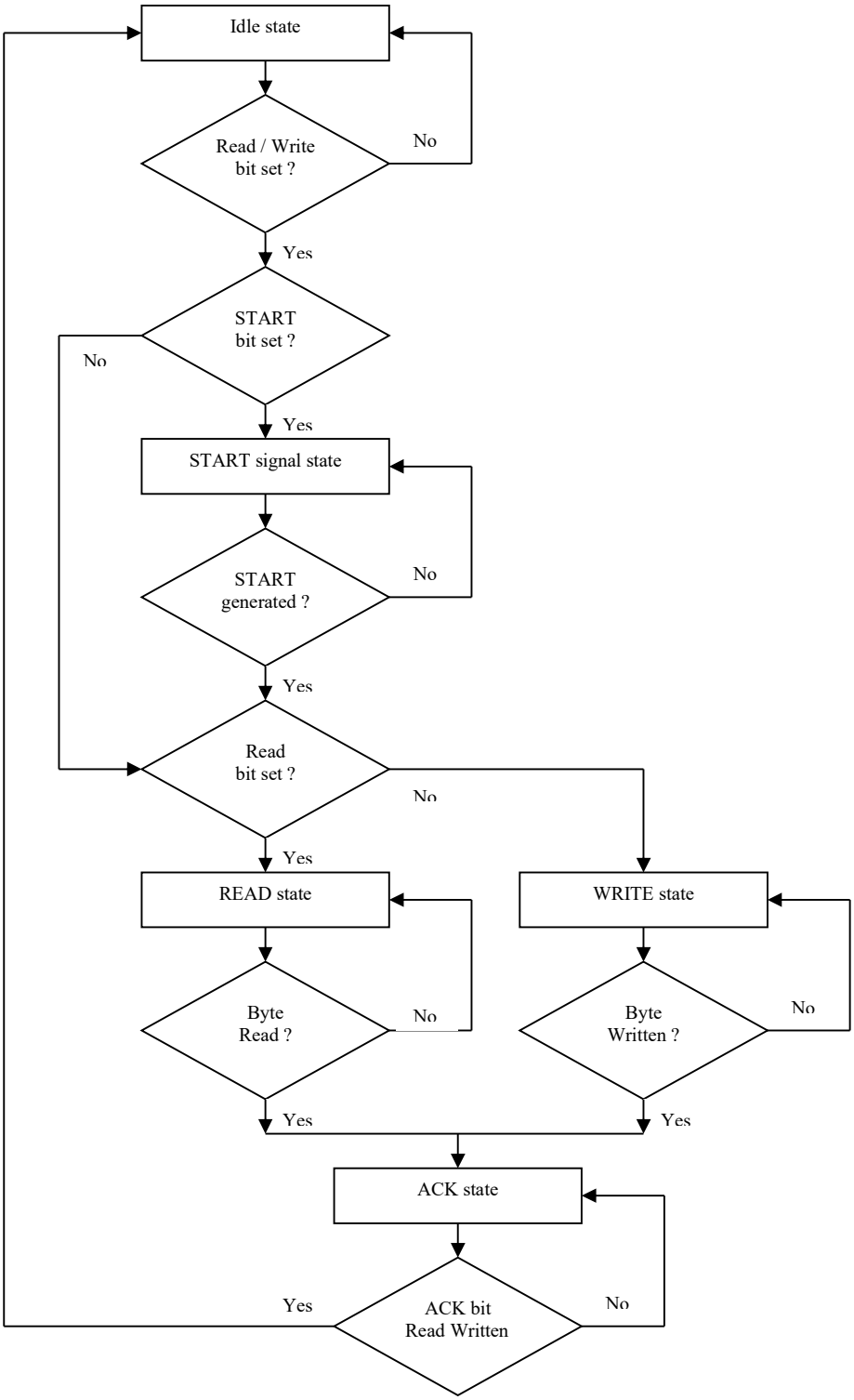

5.3 Bit Command Controller

The Bit Command Controller handles the actual transmission of data and the generation of the specific levels for START, Repeated START, and STOP signals by controlling the SCL and SDA lines. The Byte Command Controller tells the Bit Command Controller which operation has to be performed. For a single byte read, the Bit Command Controller receives 8 separate read commands. Each bit-operation is divided into 5 pieces (idle and A, B, C, and D), except for a STOP operation which is divided into 4 pieces (idle and A, B, and C).

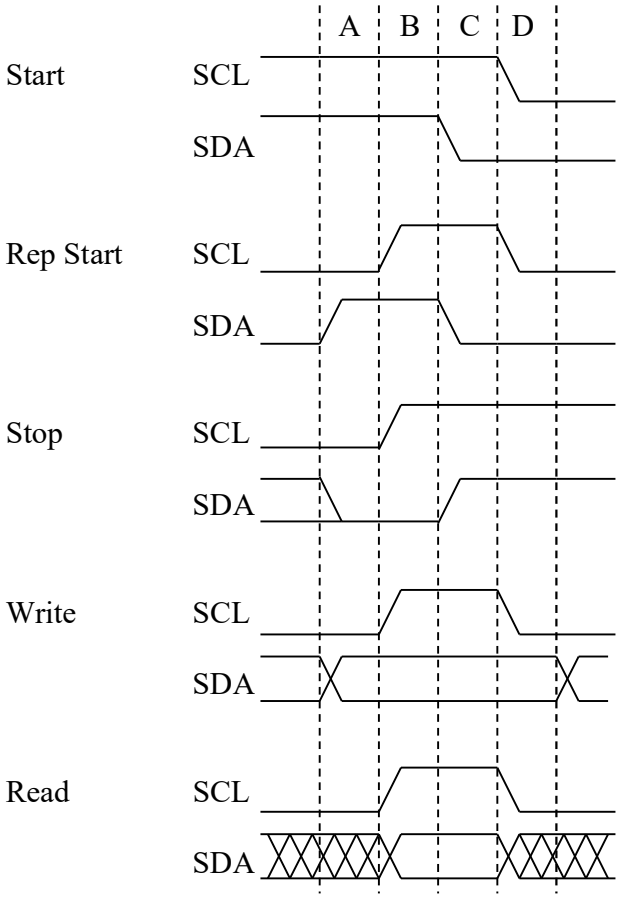

5.4 DataIO Shift Register

The DataIO Shift Register contains the data associated with the current transfer. During a read action, data is shifted in from the SDA line. After a byte has been read the contents are copied into the Receive Register. During a write action, the Transmit Register's contents are copied into the DataIO Shift Register and are then transmitted onto the SDA line.

6

Programming examples

Example 1

Write 1 byte of data to a slave.

Slave address = 0x51 (b"1010001")
Data to write = 0xAC

I2C Sequence:
1) generate start command
2) write slave address + write bit
3) receive acknowledge from slave
4) write data
5) receive acknowledge from slave
6) generate stop command

Commands:
1) write 0xA2 (address + write bit) to Transmit Register, set STA bit, set WR bit.
-- wait for interrupt or TIP flag to negate --
2) read RxACK bit from Status Register, should be '0'.
write 0xAC to Transmit register, set STO bit, set WR bit.
-- wait for interrupt or TIP flag to negate --
3) read RxACK bit from Status Register, should be '0'.

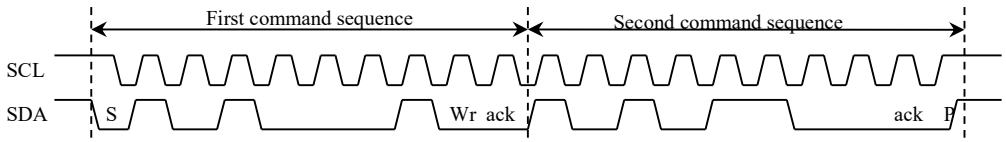

Please note that the time for the Interrupt Service Routine is not shown here. It is assumed that the ISR is much faster then the I²C cycle time, and therefore not visible.

Example 2

Read a byte of data from an I2C memory device.

Slave address = 0x4E
Memory location to read from = 0x20

I2C sequence:
1) generate start signal
2) write slave address + write bit
3) receive acknowledge from slave
4) write memory location
5) receive acknowledge from slave
6) generate repeated start signal
7) write slave address + read bit
8) receive acknowledge from slave
9) read byte from slave
10) write no acknowledge (NACK) to slave, indicating end of transfer
11) generate stop signal

Commands:
1) write 0x9C (address + write bit) to Transmit Register, set STA bit, set WR bit.
-- wait for interrupt or TIP flag to negate --
2) read RxACK bit from Status Register, should be ‘0’.
write 0x20 to Transmit register, set WR bit.
-- wait for interrupt or TIP flag to negate --
3) read RxACK bit from Status Register, should be ‘0’.
write 0x9D (address + read bit) to Transmit Register, set STA bit, set WR bit.
-- wait for interrupt or TIP flag to negate --
4) set RD bit, set ACK to ‘1’ (NACK), set STO bit

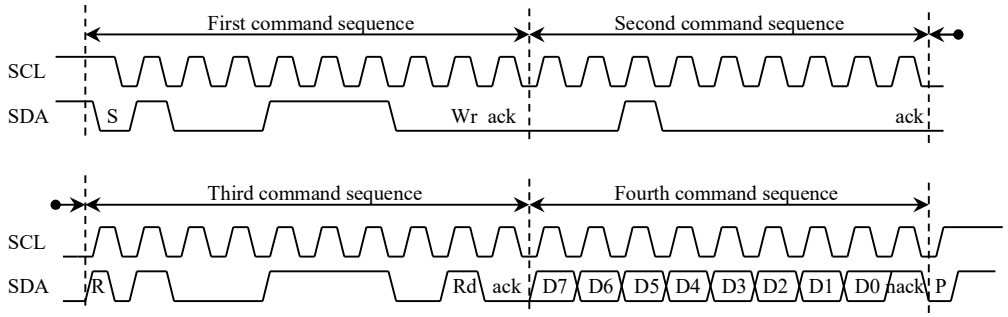

Please note that the time for the Interrupt Service Routine is not shown here. It is assumed that the ISR is much faster then the I²C cycle time, and therefore not visible.

Appendix A

Synthesis results

Synthesis tool: Synplify Pro

Technology	Device	Speed grade	Fmax	Resource usage
ACTEL	A54SX16ATQ100	std	58MHz	Modules: 352
Altera	EP10K50ETC144	-3	82MHz	LCs: 294
	EP20K30ETC144	-3	74MHz	ATOMS: 257
Xilinx	2s15CS144	-5	82MHz	LUTs: 229
	XCV50ECS144	-8	118MHz	LUTs: 230