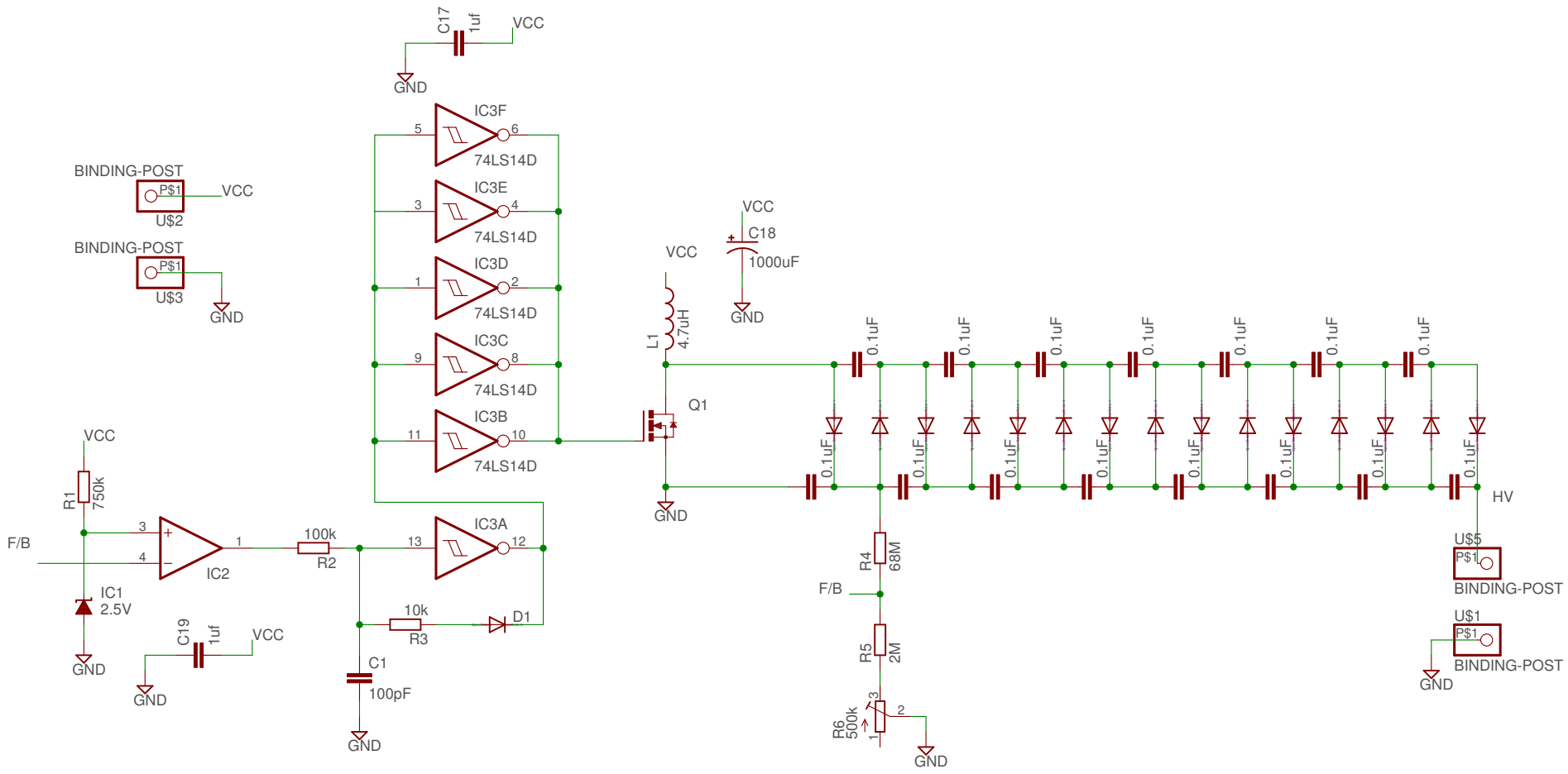

CEPS GM-COUNTER

TITLE: High Voltage Step-Up Converter	
Document Number: 1/1	REV: 1
Date: 2016/09/11	Sheet: 1/1