Sadiq S.

Practical 2

Aim: Develop the serial port communication between two microcontrollers using the UART port. Try to send the message from one system to another using proteus or keil compiler or any other similar simulator.

Theory:

Microcontrollers:

A microcontroller is a small and low-cost microcomputer, which is designed to perform the specific tasks of embedded systems like displaying microwave's information, receiving remote signals, etc.

The general microcontroller consists of the processor, the memory (RAM, ROM, EPROM), Serial ports, peripherals (timers, counters), etc.

Microcontrollers are used to execute a single task within an application. Its designing and hardware cost is low. It is Easy to replace. It is built with CMOS technology, which requires less power to operate.

Microcontrollers are widely used in various different devices such as − Light sensing and controlling devices like LED, Temperature sensing and controlling devices like microwave oven, chimneys, Fire detection and safety devices like Fire alarm, Measuring devices like Volt Meter.

a) UseCase1: Using I/O port programming:

Device used:

- 2 80c51 – core microcontroller
- 1 Led-red
- 1 switch
- 2 Ground

Diagram:

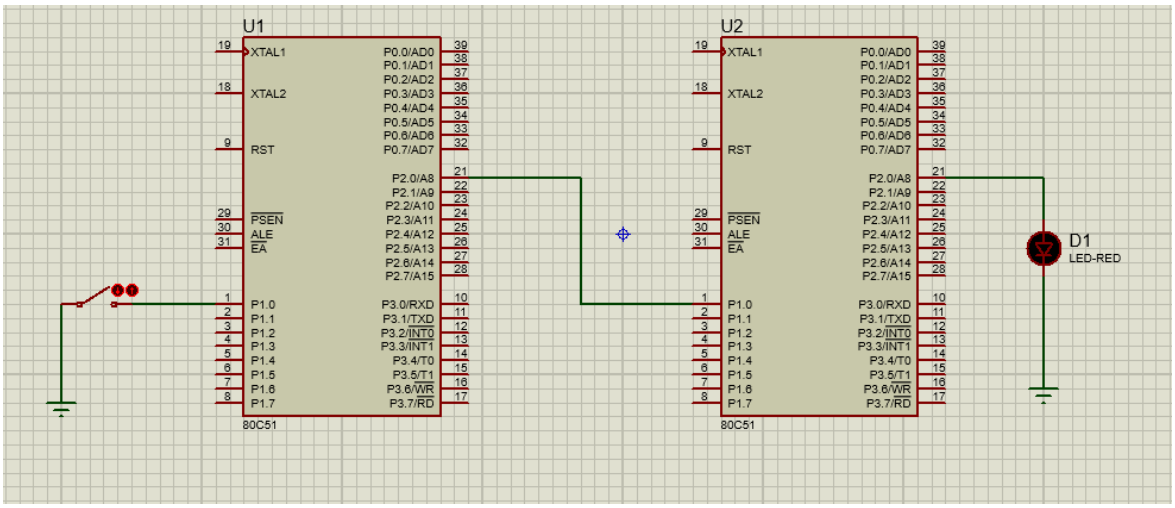

Code:

We write code for each microcontroller in Keil. And create the hex code for both the codes and then insert the respective code into the microcontroller.

1. **Code for U1 microcontroller:**

```
#include<reg51.h>
sbit sw=P1^0;
sbit outPin=P2^0;

void main (void)
{
	while(1)
	{
		if(sw==0)
		{
			outPin=1;
		}
		else
		{
			outPin=0;
		}
	}
}
```

2. **Code for U2 microcontroller:**

```
#include<reg51.h>
sbit inPin=P1^0;
sbit led=P2^0;

void main (void)
{
	while(1)
	{
		if(inPin==1)
		{
			led=1;
		}
		else
		{
			led=0;
		}
	}
}
```

Output:

When Switch is off:

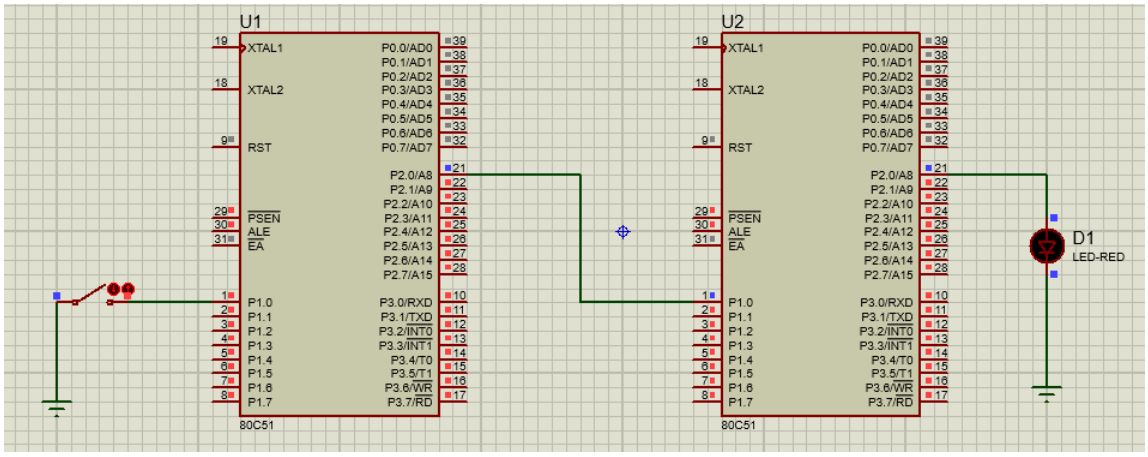

The LED won't glow.

When switch is on:

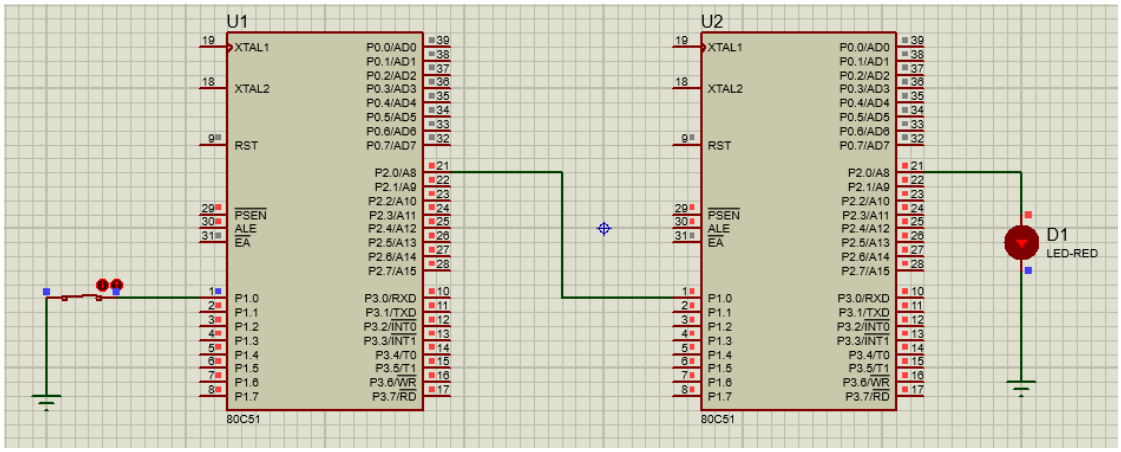

The LED will glow.

b) UseCase2: using Serial communication programming (UART)

Device used:

- 2 80c51 – core microcontroller
- 1 Led-red
- 1 Switch
- 3 Ground
- 2 LCD (LM016L)

Diagram:

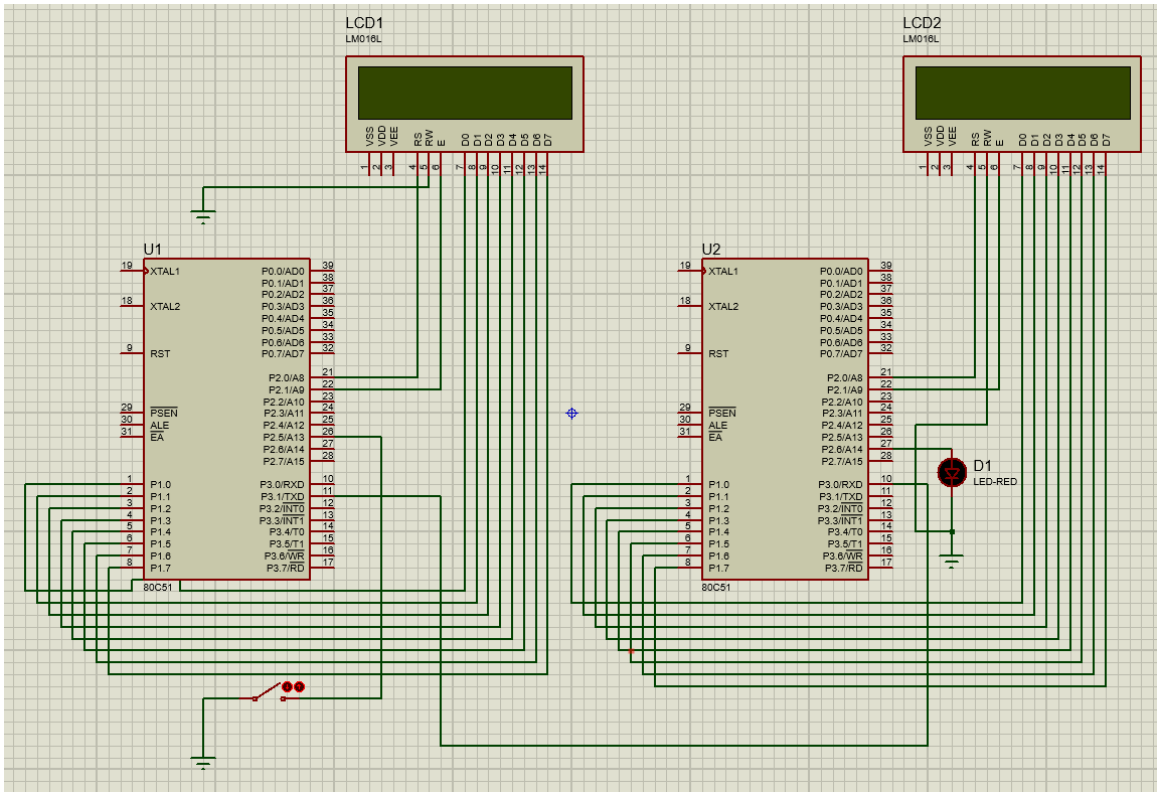

1. Code for Microcontroller U1:

```
#include<reg51.h>
void delay(unsigned int i);
void lcd_cmd(unsigned char a);
void lcd_data(unsigned char b);
void lcd_init(void);
void lcd_str(unsigned char *str);
void sendser_char(unsigned char b);
void sendser_str(unsigned char *str);
sbit rs=P2^0;
sbit en=P2^1;
sbit sw=P2^5;
//sbit led=P2^6;
sfr ldata=0x90;//port1
void main()
{
```

```
        //led=0;//led off
        TMOD=0x20;//timer1 mode2 -auto reload mode
        TH1=0xfd;//9600 baud rate
        SCON=0x50;//8bit data ,1start bit,1stop bit
        TR1=1;
lcd_init();
        lcd_str("   WELCOME TO   ");
        lcd_cmd(0xc0);
        lcd_str("   MY PROJECT   ");

        delay(65000);
        lcd_cmd(0x01);
        lcd_cmd(0x80);
lcd_str("   SADIQ   ");
        lcd_cmd(0xc0);
        lcd_str("   SONALKAR   ");
        delay(65000);
        lcd_cmd(0x01);
        lcd_cmd(0x80);
        lcd_str("   SW STATUS:  ");
        while(1)
{
        if(sw==0)
        {
        //led=1;//led on
                lcd_cmd(0xc0);
        lcd_str("   SW PRESSED  ");
        //sendser_str("   LED ON  ");
                sendser_char('A');
        }
```

```
                    else
                    {
                    //   led=0;//led off
                                        lcd_cmd(0xc0);
                    lcd_str(" SW NOT PRESSED  ");
                    //sendser_str("   LED OFF  ");
                        sendser_char('B');
                    }
}

}

void lcd_init()
{
lcd_cmd(0x38);
                    lcd_cmd(0x0c);
                    lcd_cmd(0x01);
                    lcd_cmd(0x80);
}
void delay(unsigned int i)
{
unsigned int j;
                    for(j=0;j<i;j++);
}

void lcd_cmd(unsigned char a)
{
  rs=0;//cmd
                    ldata=a;
                    en=1;
```

```
                delay(5);
                en=0;
                delay(5);
}
void lcd_data(unsigned char b)
{
 rs=1;//data
                ldata=b;
                en=1;
                delay(5);
                en=0;
                delay(5);
}
void lcd_str(unsigned char *str)
{
while(*str)
{
                lcd_data(*str++);
}

}
void sendser_char(unsigned char b)
{
SBUF=b;
                while(TI==0);
                TI=0;
}
void sendser_str(unsigned char *str)
{
while(*str)
```

```
{
                    sendser_char(*str++);
}

}
```

2. Code for microcontroller U2:

```
#include<reg51.h>
void delay(unsigned int i);
void lcd_cmd(unsigned char a);
void lcd_data(unsigned char b);
void lcd_init(void);
void lcd_str(unsigned char *str);
void sendser_char(unsigned char b);
void sendser_str(unsigned char *str);
sbit rs=P2^0;
sbit en=P2^1;
//sbit sw=P2^5;
sbit led=P2^6;
sfr ldata=0x90;//port1
unsigned char rx;
void main()
{
                        led=0;//led off
                    TMOD=0x20;//timer1 mode2 -auto reload mode
                    TH1=0xfd;//9600 baud rate
                    SCON=0x50;//8bit data ,1start bit,1stop bit
                    TR1=1;
lcd_init();
                    lcd_str("   WELCOME TO   ");
                    lcd_cmd(0xc0);
```

```
                lcd_str("   MY PROJECT   ");

                delay(65000);
                    lcd_cmd(0x01);
                    lcd_cmd(0x80);
lcd_str("   YT TRAINING   ");
                lcd_cmd(0xc0);
                lcd_str("   INSTITUTE   ");
                    delay(65000);
                    lcd_cmd(0x01);
                    lcd_cmd(0x80);
                lcd_str("   LED STATUS:  ");
                while(1)
{
                while(RI==0);
                rx=SBUF;
                RI=0;

                if(rx=='A')
                {
                led=1;//led on
                                lcd_cmd(0xc0);
                lcd_str("   LED ON  ");
                    //sendser_str("   LED ON  ");
                                //sendser_char(0x0d);
                }
                else if (rx=='B')
                {
                    led=0;//led off
                                lcd_cmd(0xc0);
```

```
                    lcd_str("   LED OFF  ");
//                  sendser_str("   LED OFF  ");
                    //   sendser_char(0x0d);
                    }
                    else
                    {
                    }
}
}
void lcd_init()
{
lcd_cmd(0x38);
                    lcd_cmd(0x0c);
                    lcd_cmd(0x01);
                    lcd_cmd(0x80);
}
void delay(unsigned int i)
{
unsigned int j;
                    for(j=0;j<i;j++);
}

void lcd_cmd(unsigned char a)
{
  rs=0;//cmd
                    ldata=a;
                    en=1;
                    delay(5);
                    en=0;
                    delay(5);
```

```
}
void lcd_data(unsigned char b)
{
  rs=1;//data
                    ldata=b;
                    en=1;
                    delay(5);
                    en=0;
                    delay(5);
}
void lcd_str(unsigned char *str)
{
while(*str)
{                   lcd_data(*str++);
}
}
void sendser_char(unsigned char b)
{
SBUF=b;
while(TI==0);
                    TI=0;}
void sendser_str(unsigned char *str)
{
while(*str)
{
sendser_char(*str++);
}
}
```

Output:

When switch is off:

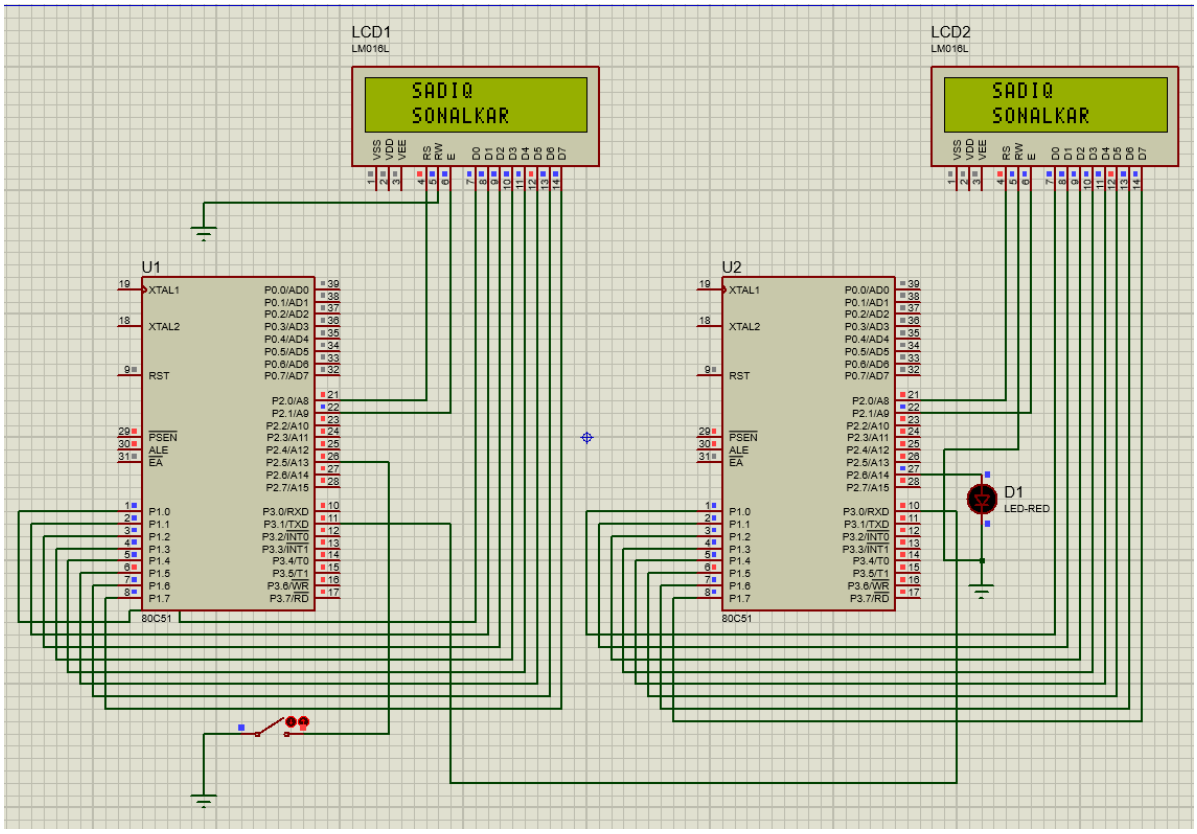

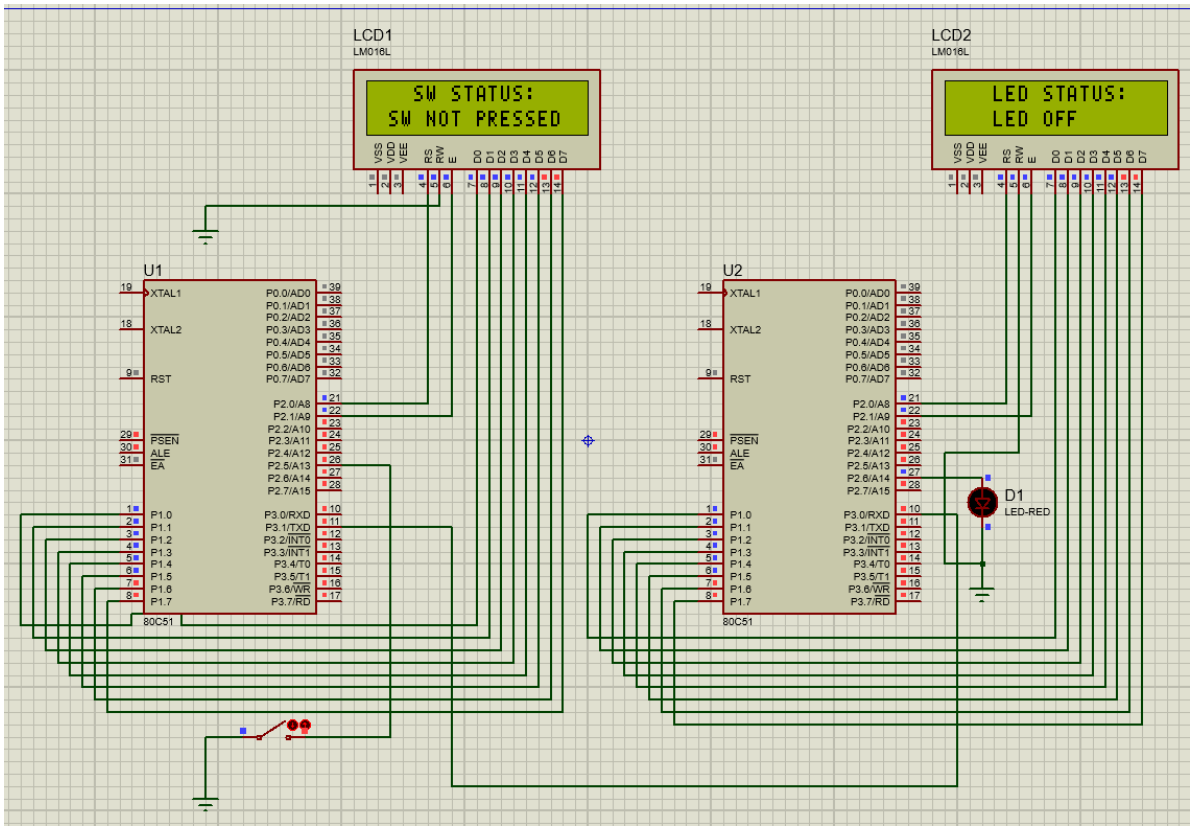
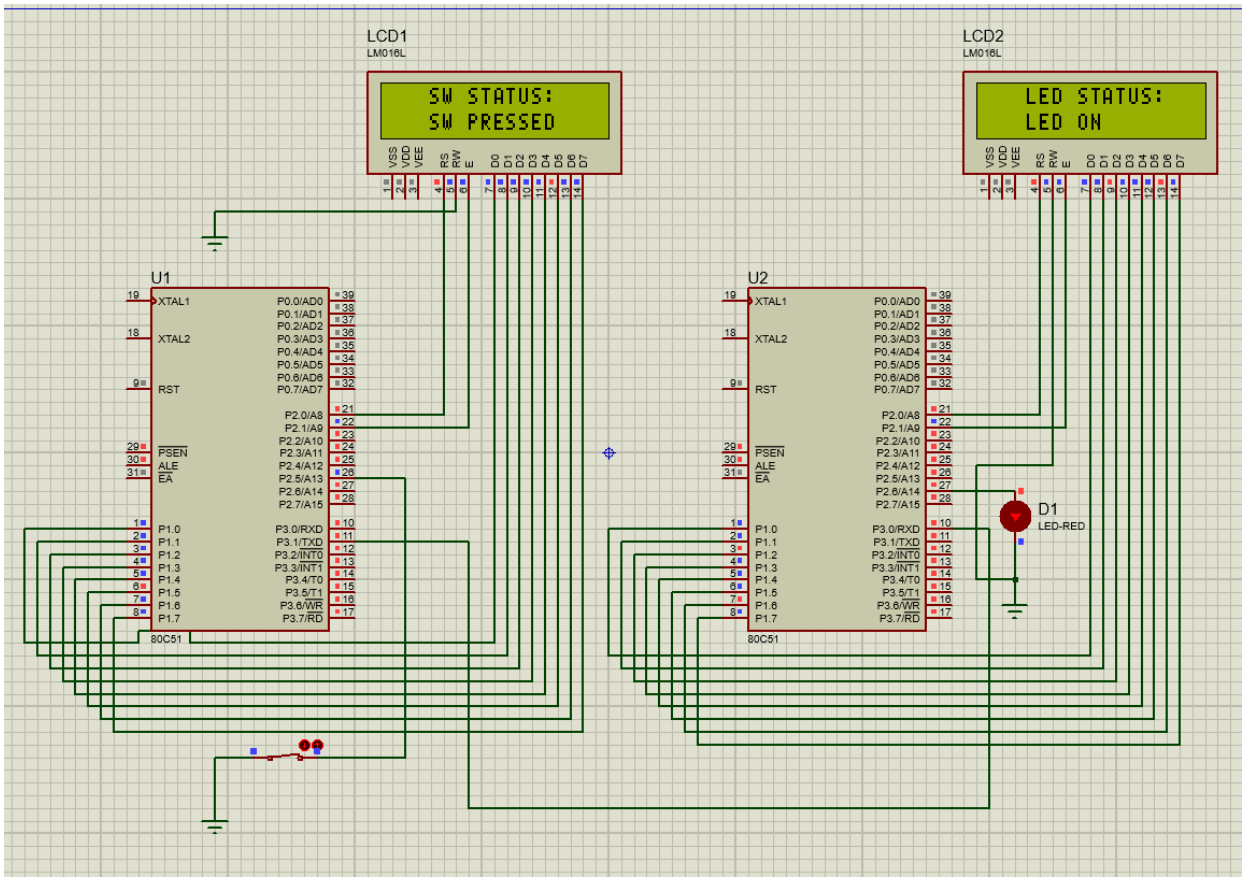
When switch is turned on: