Sadiq S.

Practical 3

Aim: Develop an IoT application for monitoring water levels in tanks and automatically start the motor to fill the tank if the level goes below the critical level.

Theory:

Microcontroller: A microcontroller is a small and low-cost microcomputer, which is designed to perform the specific tasks of embedded systems like displaying microwave's information, receiving remote signals, etc.

The general microcontroller consists of the processor, the memory (RAM, ROM, EPROM), Serial ports, peripherals (timers, counters), etc.

Relay: A Relay is a simple electromechanical switch. While we use normal switches to close or open a circuit manually, a Relay is also a switch that connects or disconnects two circuits.

But instead of a manual operation, a relay uses an electrical signal to control an electromagnet, which in turn connects or disconnects another circuit.

Transistor: A transistor is a miniature semiconductor that regulates or controls current or voltage flow in addition amplifying and generating these electrical signals and acting as a switch/gate for them.

Typically, transistors consist of three layers, or terminals, of a semiconductor material, each of which can carry a current.

Requirements:

- 1 Microcontoller (AT89C51RD2)
- 1 Relay
- 1 Motor
- 1 LCD (LM016L)
- 1 Battery
- 3 Transistor(BC547BP)
- 3 Logic Toggle
- 4 Power
- 3 Ground

Diagram:

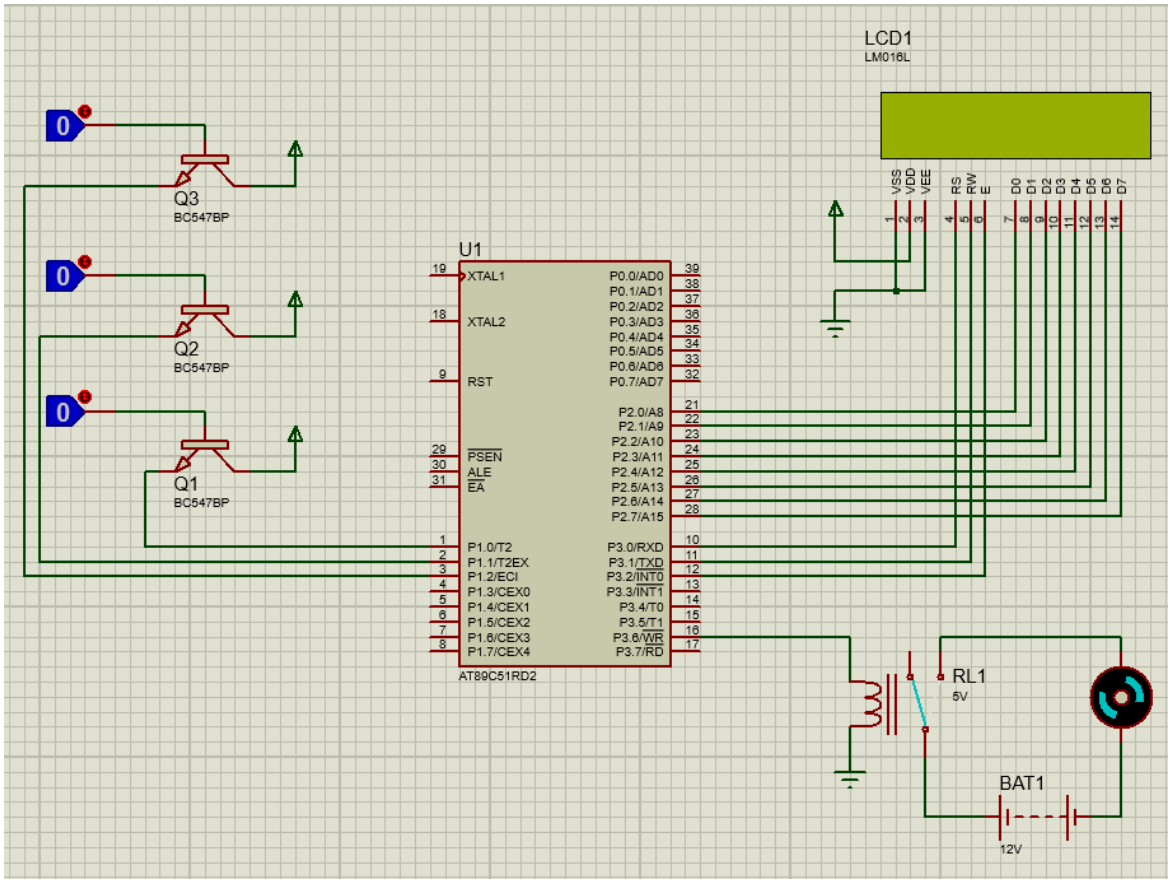

To write the code for Microcontroller U1:

1. Open Uvision and create a new project.
2. Select device as AT89C51RD2.
3. After creating the project click source group 1 and click on 'add new item to group'.
4. Select c file and type your filename then add it.

Code:

```
#include<reg51.h>

#define lcdport P2

sbit rs=P3^0;

sbit rw=P3^1;

sbit en=P3^2;


sbit half=P1^0;

sbit full=P1^2;

sbit mid=P1^1;

sbit motor=P3^6;
```

```
void lcdcmd(char);
void lcdint();
void lcddata(char);
void lcdstring(char *);
void delay(unsigned int);

void main()
{
P1=0x00;
half=full=mid=0;
motor=0;

while(1)
{
lcdint();
if(half==0&&full==0&&mid==0)
{
lcdcmd(0x85);
lcdstring("EMPTY");
}
if(half==1&&full==0&&mid==0)
{
lcdcmd(0x85);
lcdstring("LOW");
}
if(half==1&&full==0&&mid==1)
{
lcdcmd(0x85);
lcdstring("HALF");
```

```
}
if(half==1&&full==1&&mid==1)
{
motor=1;
lcdcmd(0x85);
lcdstring("FULL!!!");
lcdcmd(0xc3);
lcdstring("Motor Band Kar");
motor=0;
}
}
}

void delay(unsigned int x)
{
unsigned int i;
for(i=0;i<x;i++);
}
void lcdint()
{
lcdcmd(0x38);
delay(500);
lcdcmd(0x01);
delay(500);
lcdcmd(0x0c);
delay(500);
lcdcmd(0x80);
delay(500);
lcdcmd(0x0e);
delay(500);
```

```
}

void lcdcmd(char value)
{
lcdport = value;
rw=0;
rs=0;
en=1;
delay(500);
en=0;
}

void lcdstring(char *p)
{
while(*p!='\0')
{
lcddata(*p);
delay(10000);
p++;
}
}

void lcddata(char value)
{
lcdport = value;
rs=1;
rw=0;
en=1;
delay(500);
en=0;
```

}

After writing the code create the HEX file, translate the code and build it.

Then insert the HEX file in the microcontroller U1

Ouptut:

When all the logic button are 0 the tank will show EMPTY and the motor will start running.

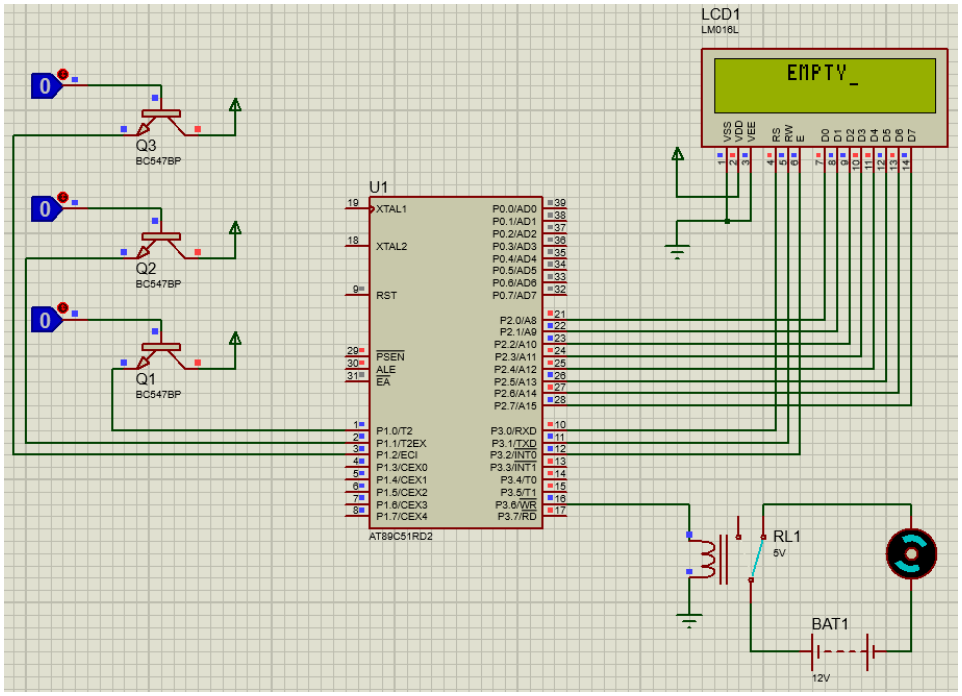

When the first logic button is 1 the tank will show LOW and the motor will continue to run.

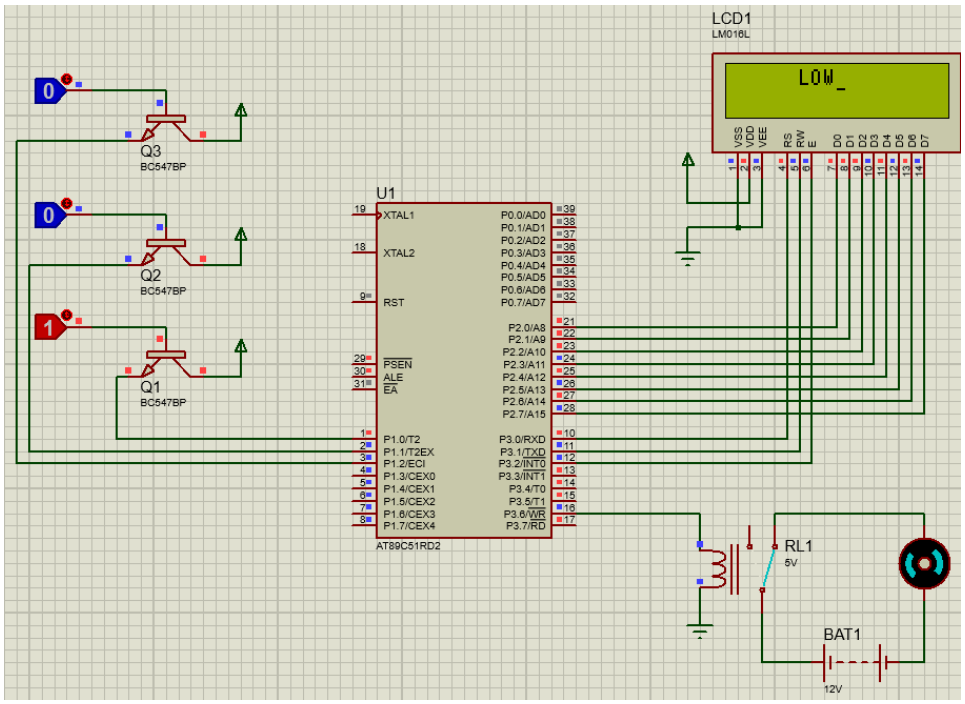

When the first and second logic button is 1 the tank will show HALF and the motor will continue to run.

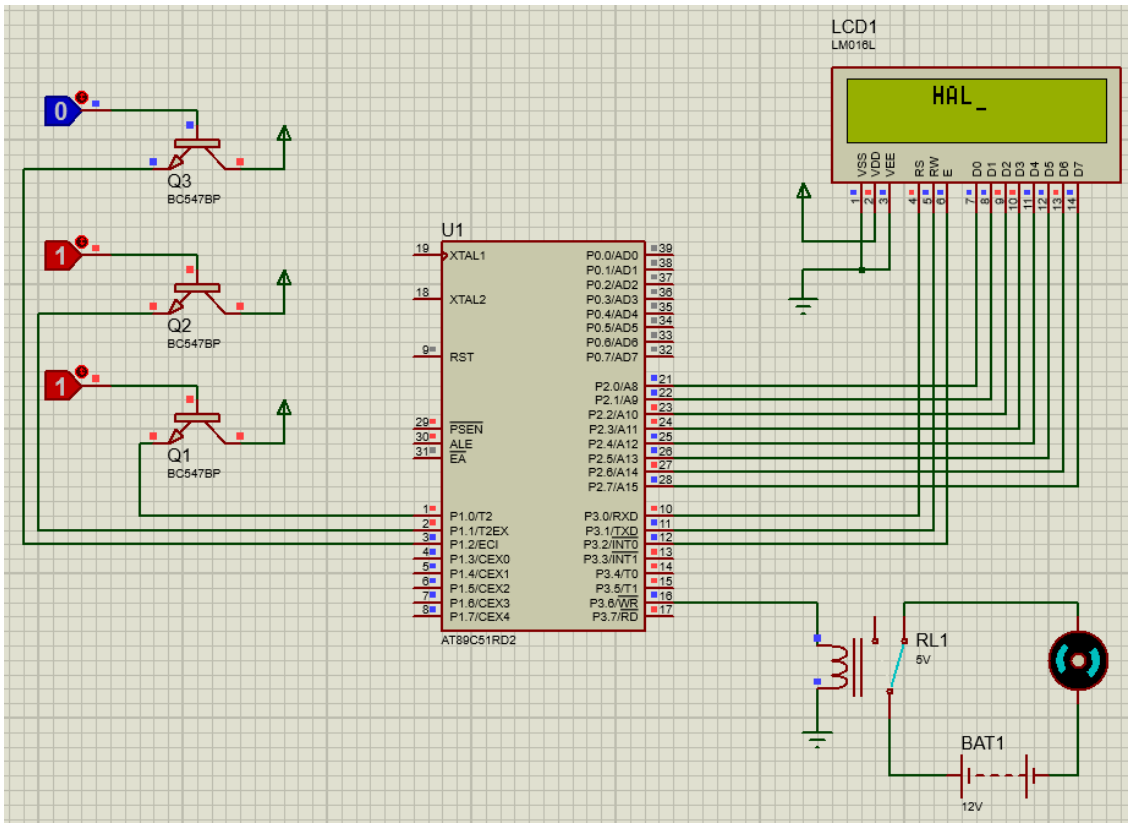
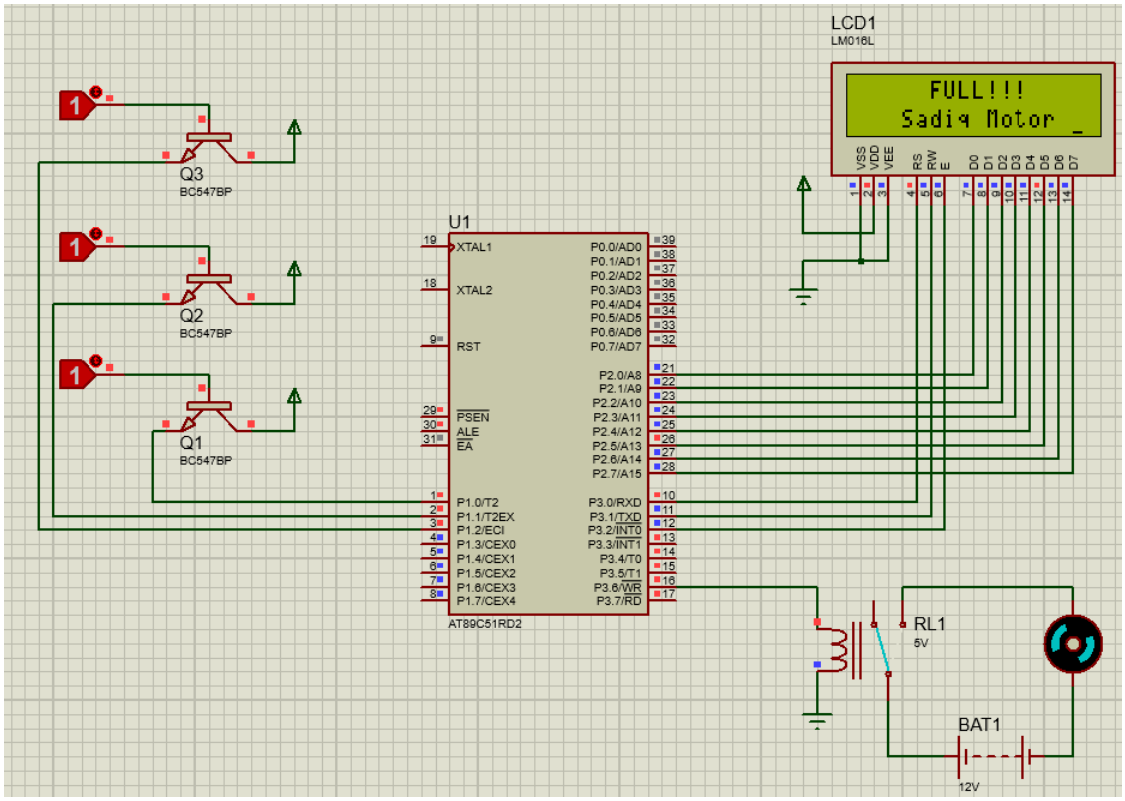
When all the logic button are 1 the tank will show Full and the motor will stop running.