Sadiq S.

Practical 6

Aim: Develop an IoT module to which measure the intensity of light.

Theory:

Arduino:

Arduino is an open-source platform used for building electronics projects. Arduino consists of both a physical programmable circuit board (often referred to as a microcontroller) and a piece of software, or IDE (Integrated Development Environment) that runs on your computer, used to write and upload computer code to the physical board.

Arduino is an open-source electronics platform based on easy-to-use hardware and software. Arduino boards are able to read inputs - light on a sensor, a finger on a button, and turn it into an output - activating a motor, turning on an LED light.

The Arduino software is easy-to-use for beginners, yet flexible enough for advanced users.

Arduino also simplifies the process of working with microcontrollers

Other advantage of Arduino:

- Inexpensive
- Cross-platform
- Simple, clear programming environment
- Open source and extensible software
- Open source and extensible hardware

Requirements:

- 1 Power
- 2 Ground
- 1 Arduino UNO
- 1 LCD Screen (LM016L)
- 1 Torch and Light Dependent Resistor (LDR)
- 1 Resistor 1kΩ

Step1: Install Arduino Libraries for Proteus to use: (https://www.theengineeringprojects.com/2015/12/arduino-library-proteus-simulation.html)

Extract the files in to the Library Folder of Proteus.

Step 2: Install Arduino IDE. (https://www.arduino.cc/en/software)

Step 3: Configure the system

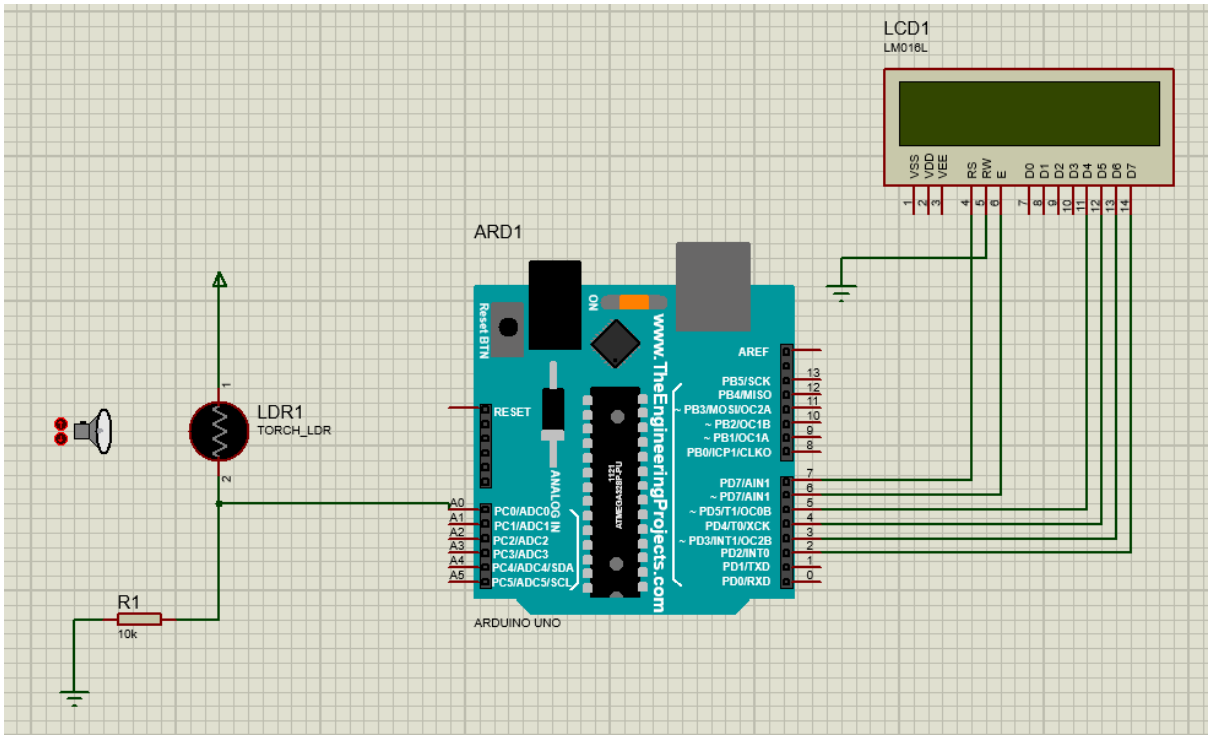

Write the code for the Arduino Microcontroller using the Arduino IDE which we have installed before

Code:

```
#include  <LiquidCrystal.h>

//Initialize libraries with the pin interface
LiquidCrystal lcd(7, 6, 5, 4, 3, 2);

void setup(){
  //Setup the LCD number of columns and rows
  lcd.begin(16,2);

  //Print
  lcd.setCursor(1,0);
  lcd.print("LDR Out=");
  lcd.setCursor(1,1);
  lcd.print("Light Intensity");
}
void loop(){
  //Put the main code here to run repeatedly
  int ldr= analogRead(A0);
  lcd.setCursor(10,0);
  lcd.print(ldr);
}
```

After compiling the in console .hex file path it will provide

Copy the .hex file which we got in Arduino and paste in program file of the Arduino in Proteus

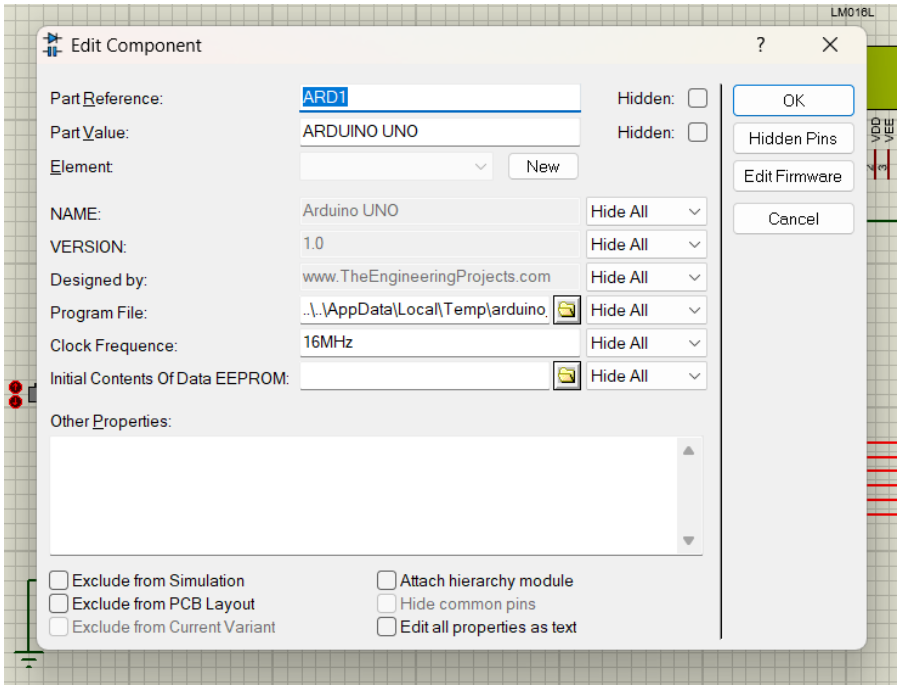

Output:

When we run the simulation there is a fixed intensity of light measure on the LCD screen.

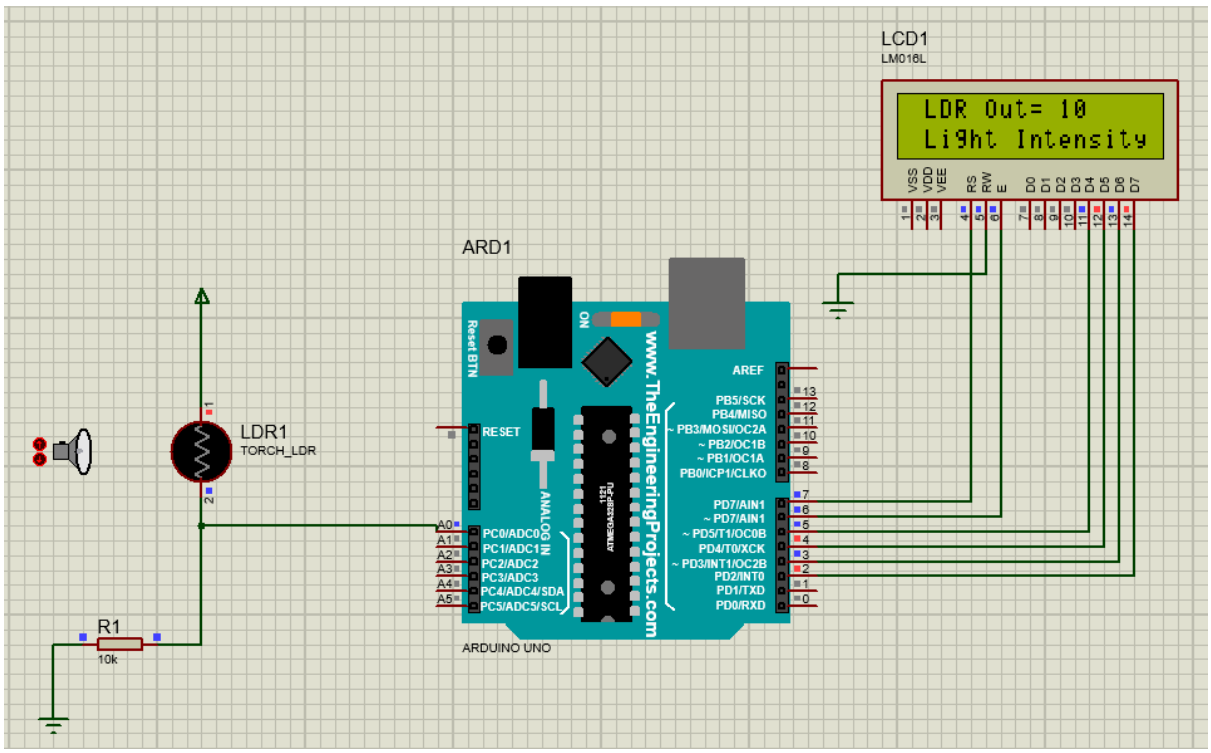

When we bring the torch closer to the LDR, the intensity increases.

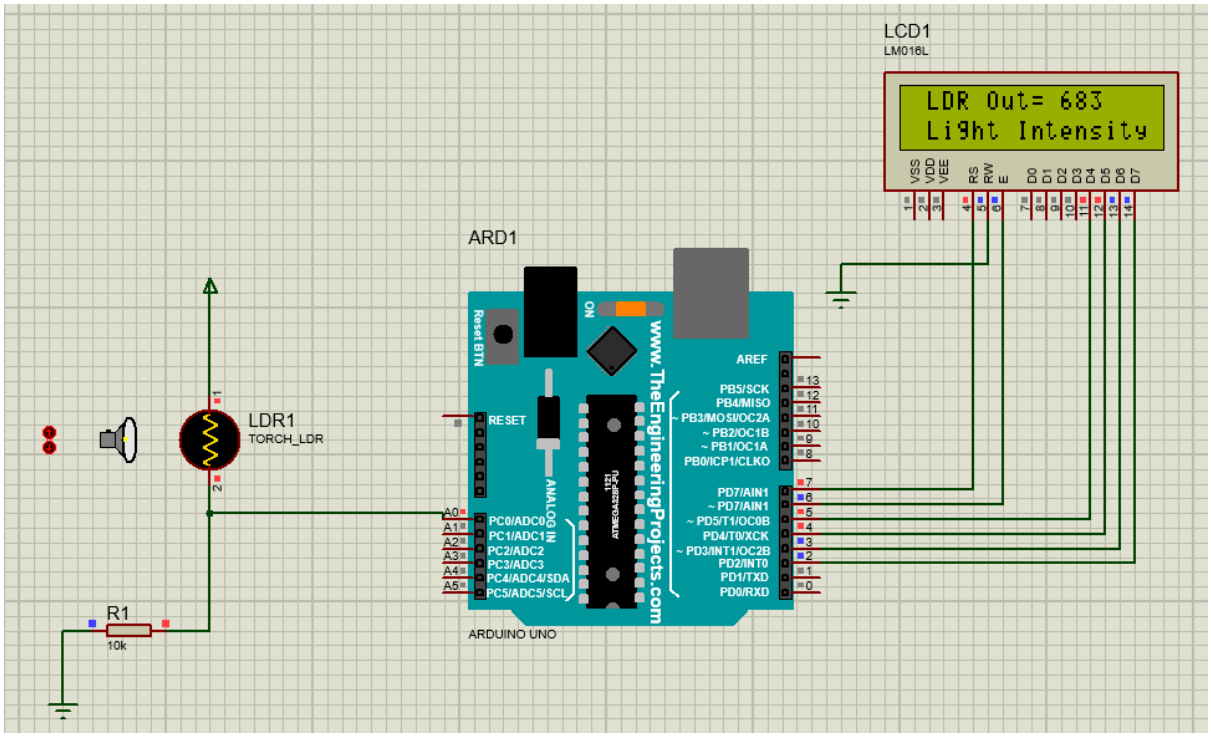

And as we take the torch away from the LDR the intensity decreases.

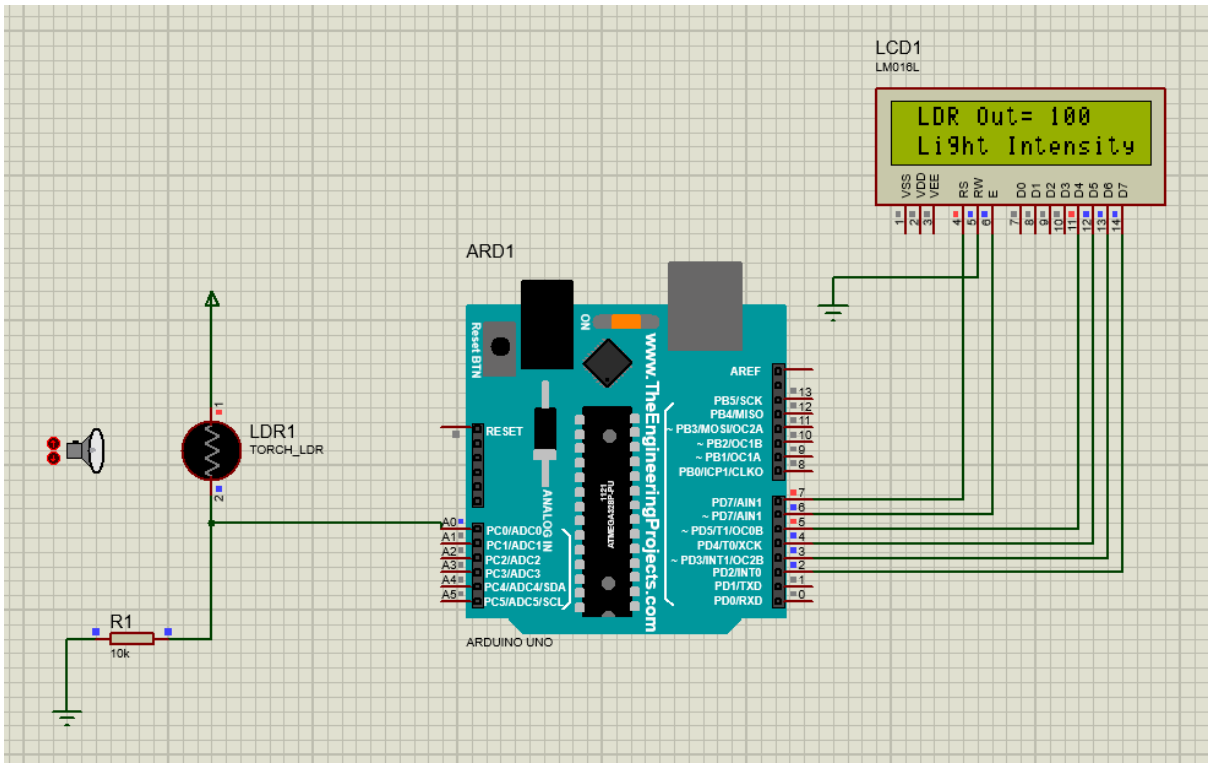

After 100 it won't decrease any further.