Sadiq S.

Practical 1

Aim: Design and implement basics embedded circuits

a) Automatic Alarm system – Alarm should get trigger by sensor
b) Timer based buzzer
c) Sensor based counting device

Theory:

Embedded System:

- An embedded system is any computer system contained within a product that is not described as a computer.
- Embedded systems are designed for a specific task. Although they use computer techniques, they cannot be used as a general-purpose computer using a variety of different programmes for different task. In this way their function can be focussed onto what they need to do, and they can accordingly be made cheaper and more efficiently.
- The software for embedded systems is normally referred to as firmware. Rather than being stored on a disc, where many programmes can be stored, the single programme for an embedded system is normally stored on chip and it is referred to as firmware.
- **Embedded systems contain two main elements:**
  - Embedded system hardware
  - Embedded system software

a) Automatic Alarm system – Alarm should get trigger by sensor

Requirements:

- 1 Led-Red
- 1 Transistor (TIP31)
- 2 Resistor
  - 100 Ohms
  - 1k Ohms
- 1 Buzzer
- 1 Power source (DC) – 12.5 Volts
- Ground
- Sw-dpst

We can change Volt and Ohms from 'Edit Properties' menu of the component.

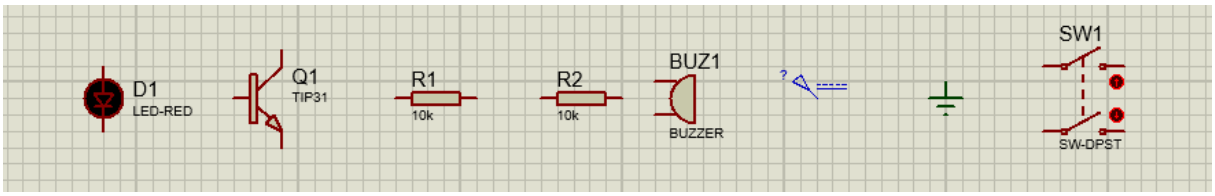

Now we will arrange and prepare our diagram.

Sadiq S.

Diagram:

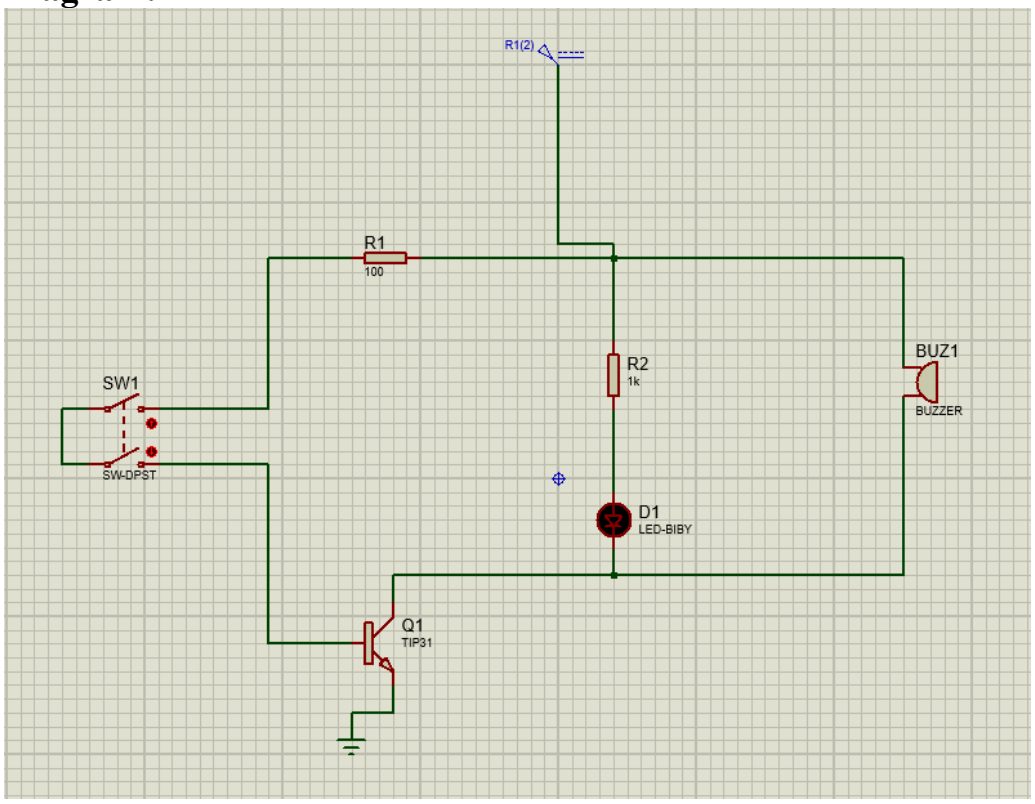

Output:

When we disconnect the switch the LED and buzzer will be off.
But the moment we connect the switch both LED and buzzer will turn on.

When the sensor is in the off state:

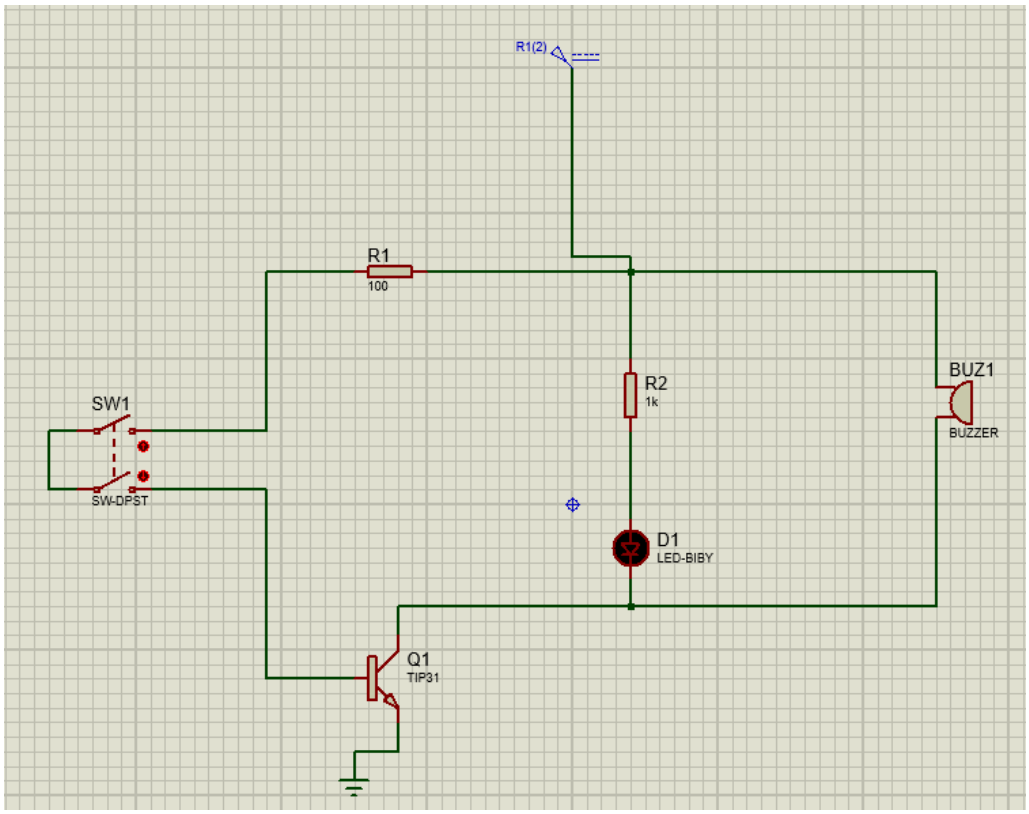

When the sensor is in the on state:

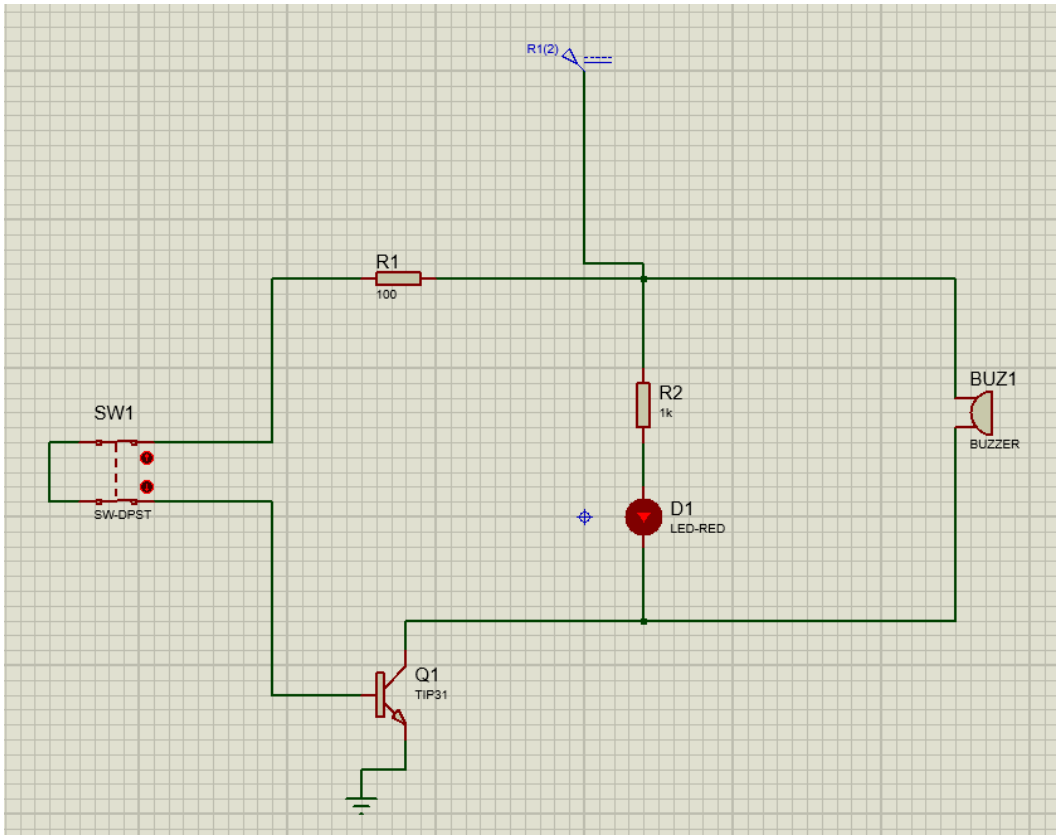

b) Timer based buzzer

Requirements:

- 1 Battery
  - 12 Volt
- 1 Led-Red
- 3 Resistor
  - 220 Ohms
  - 100k Ohms
  - 470 Ohms
- 3 Ground
- 1 Capacitor
  - 1 Farad
- 1 PCB (NE555)

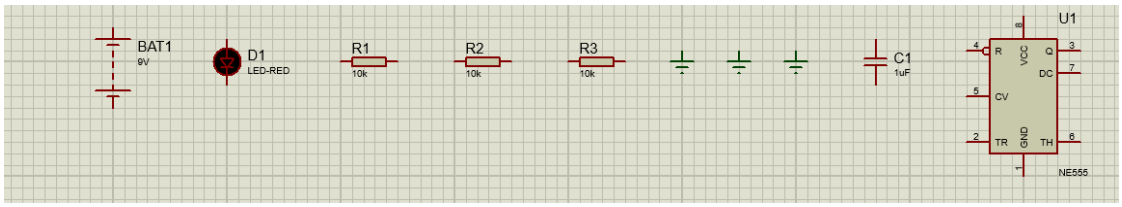

Now we will arrange and prepare our diagram.

Diagram:

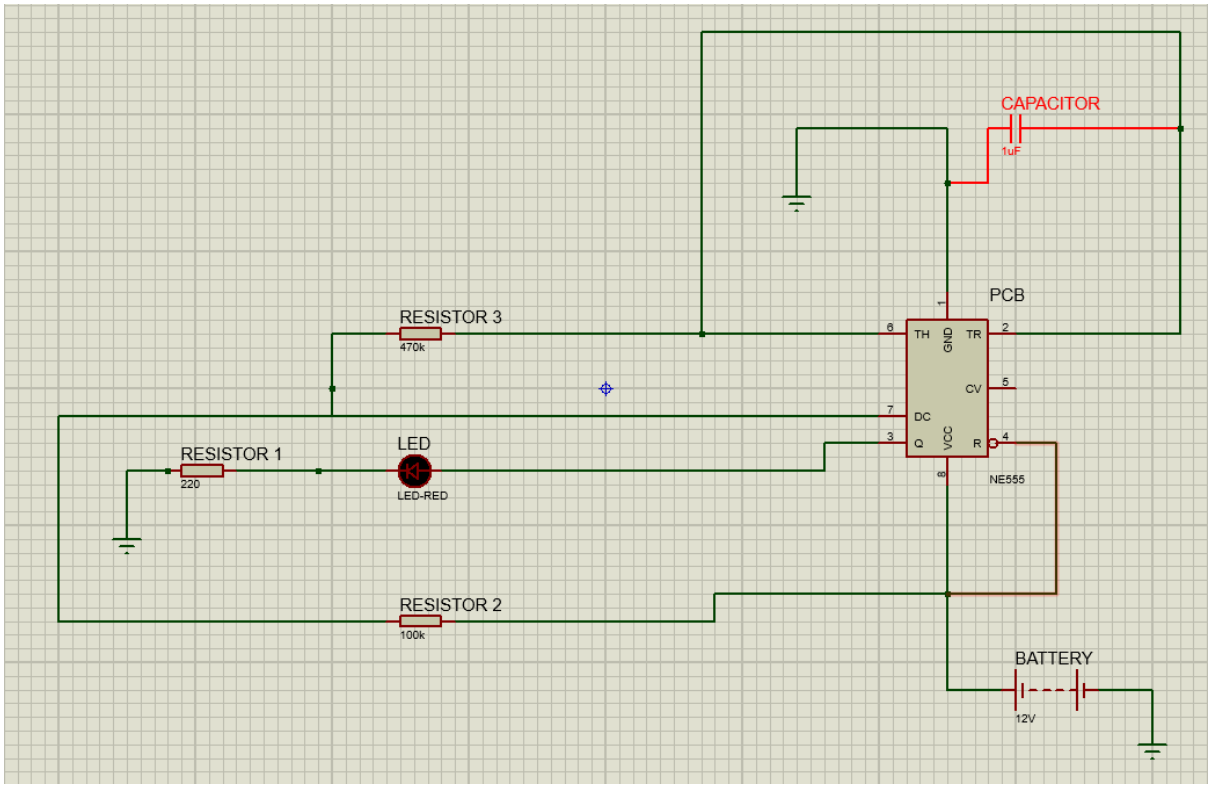

Output:

The simulation starts the Red LED will keep blinking based on the configuration made to the PCB (NE555).

When we starts the circuit the LED will starts blinking till we stops the circuit.

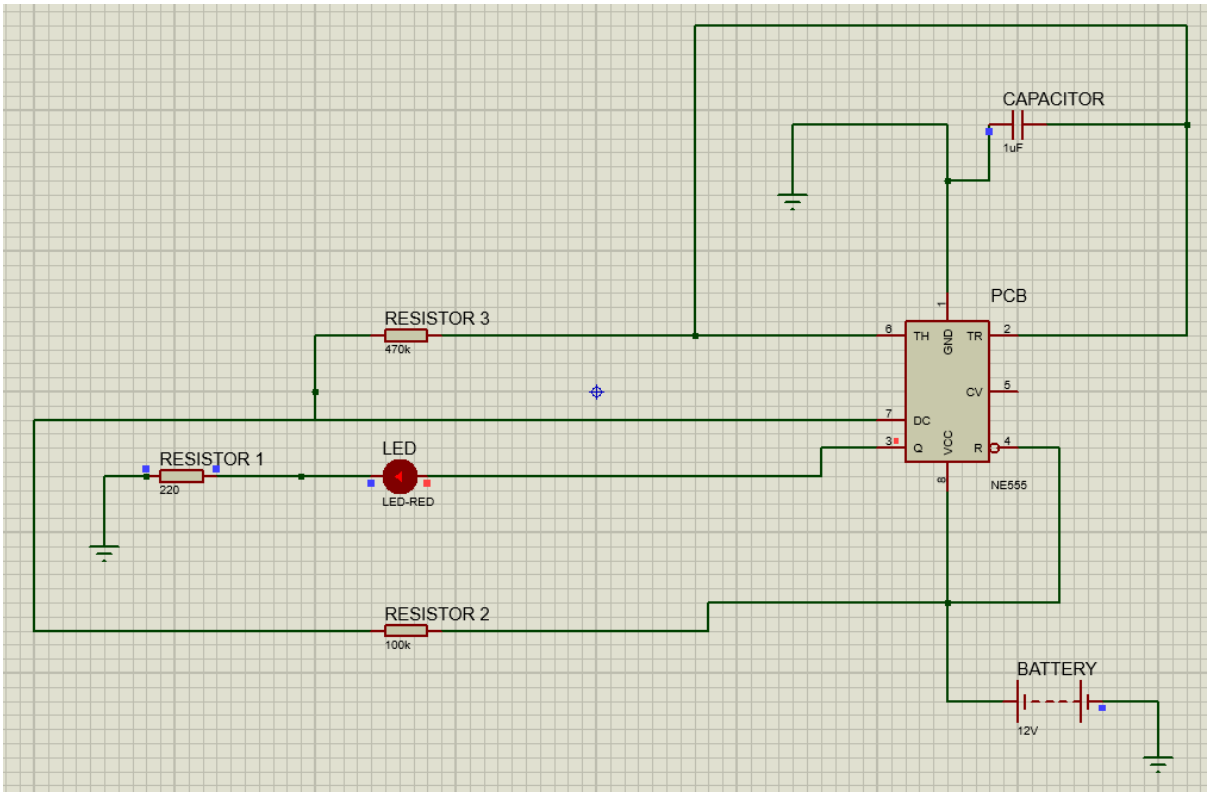

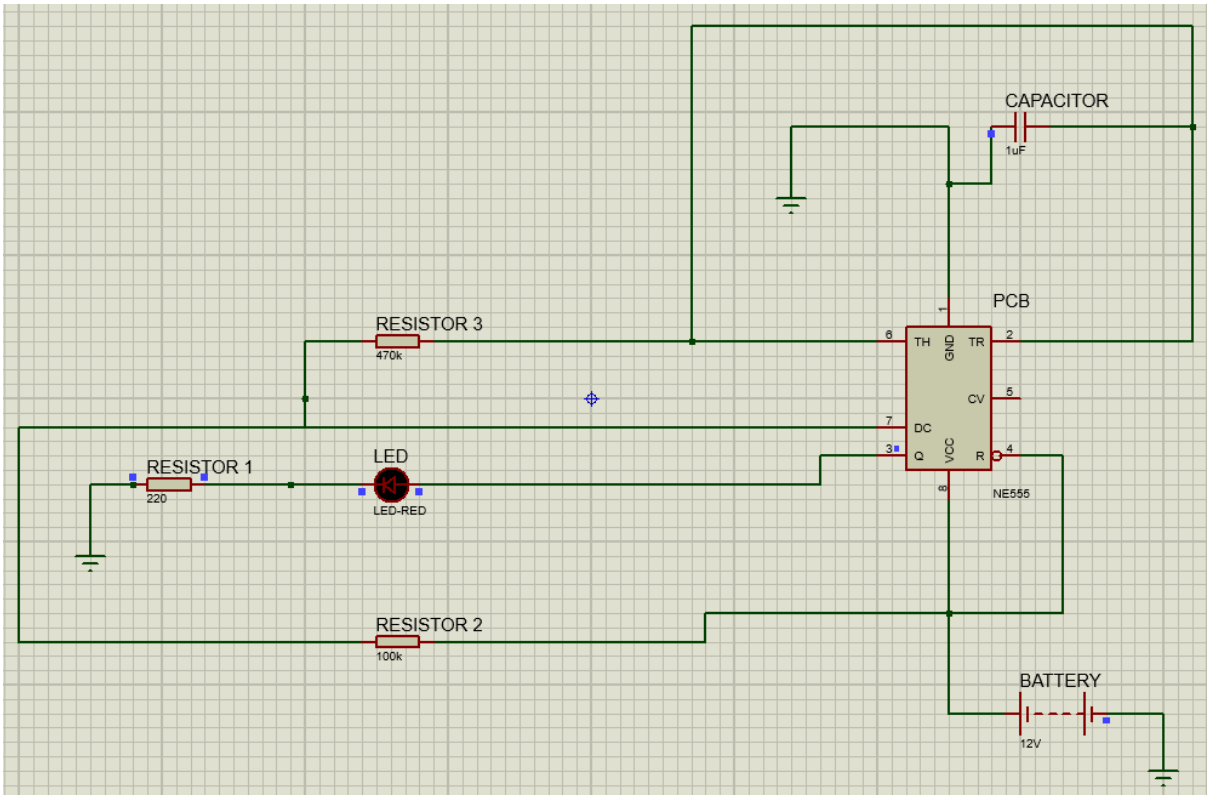

c) **Sensor based counting device**

Requirements:

- 1 led screen (7SEG-COM-CATHODE)
- 1 PCB (4026)
- 1 Resistor (MINRES10K)
  - 10K Ohms
- 1 TORCH_LDR
- 1 Power Source

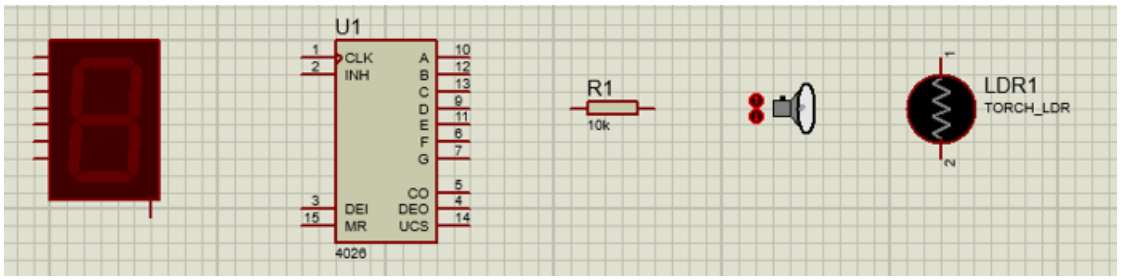

Now we will arrange and prepare our diagram.

Diagram:

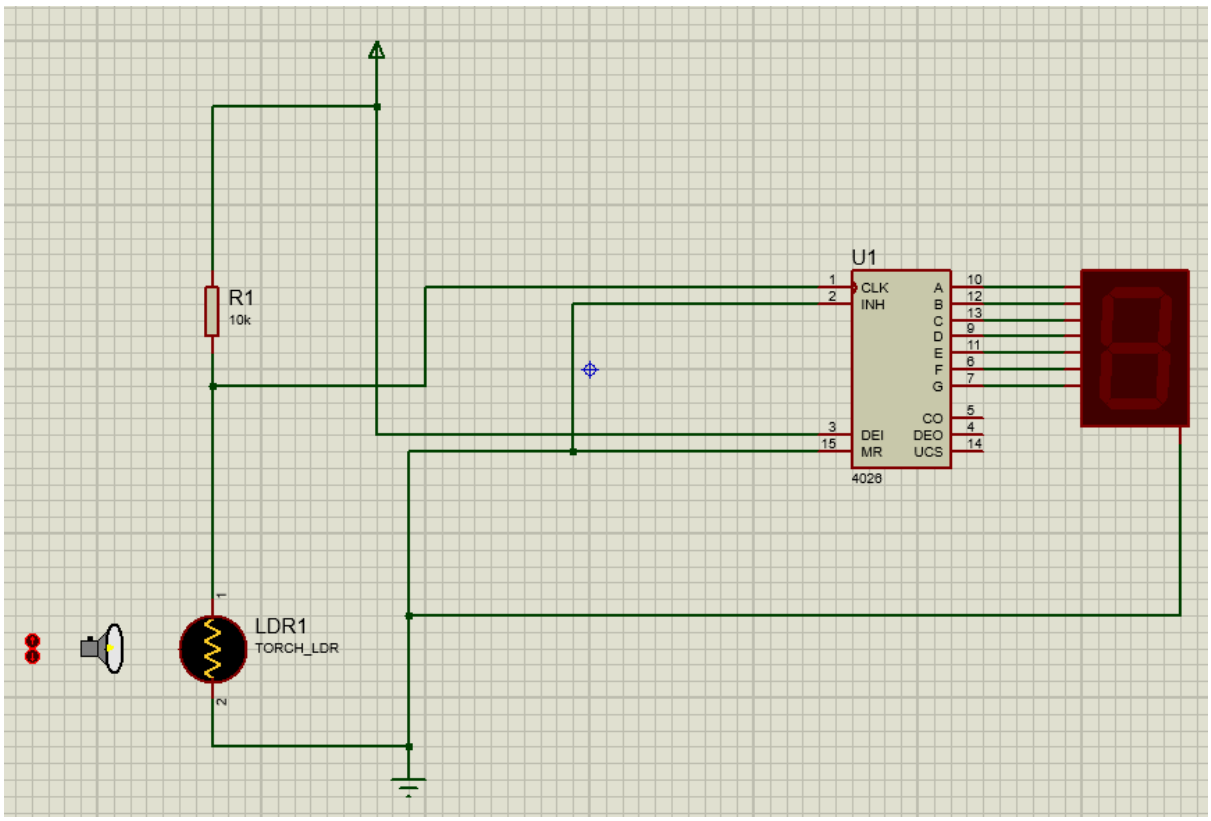

Output:

The simulation.
Press the '+' and '-' on the TORCH_LDR component to change the torch distance from the LDR.
When we press '+' and the '-' on the LDR, the count on the LED Screen will increase by 1.

I have not yet press the '+' and '-' on the LDR, so the count on LED is 0.

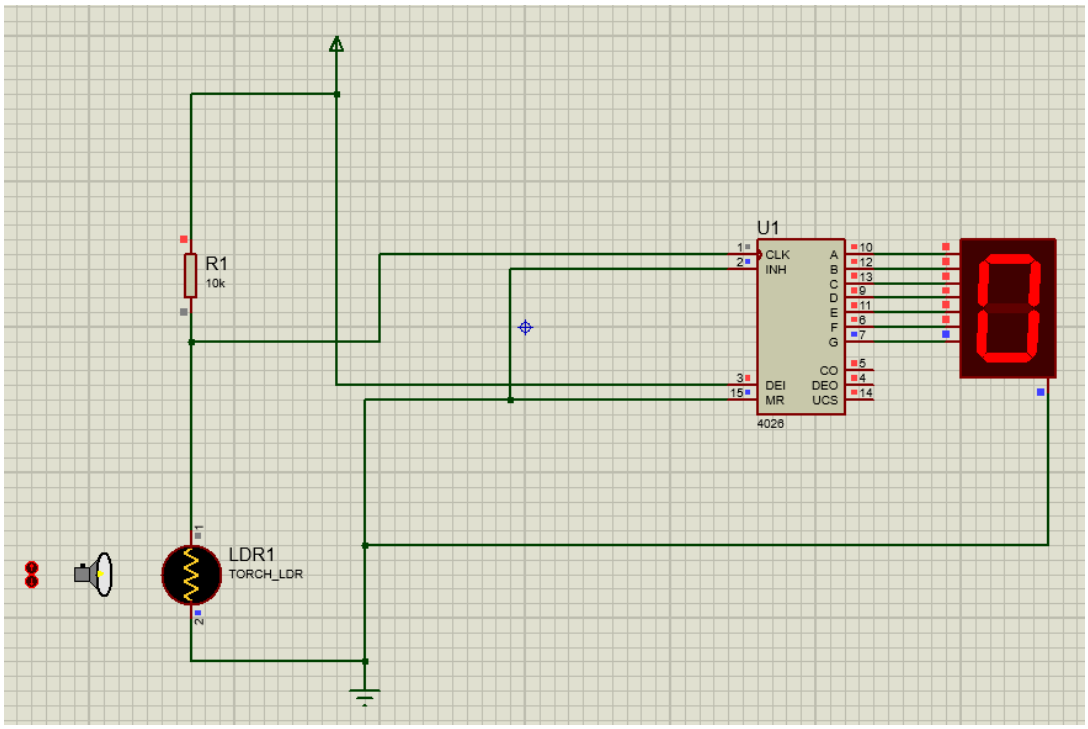
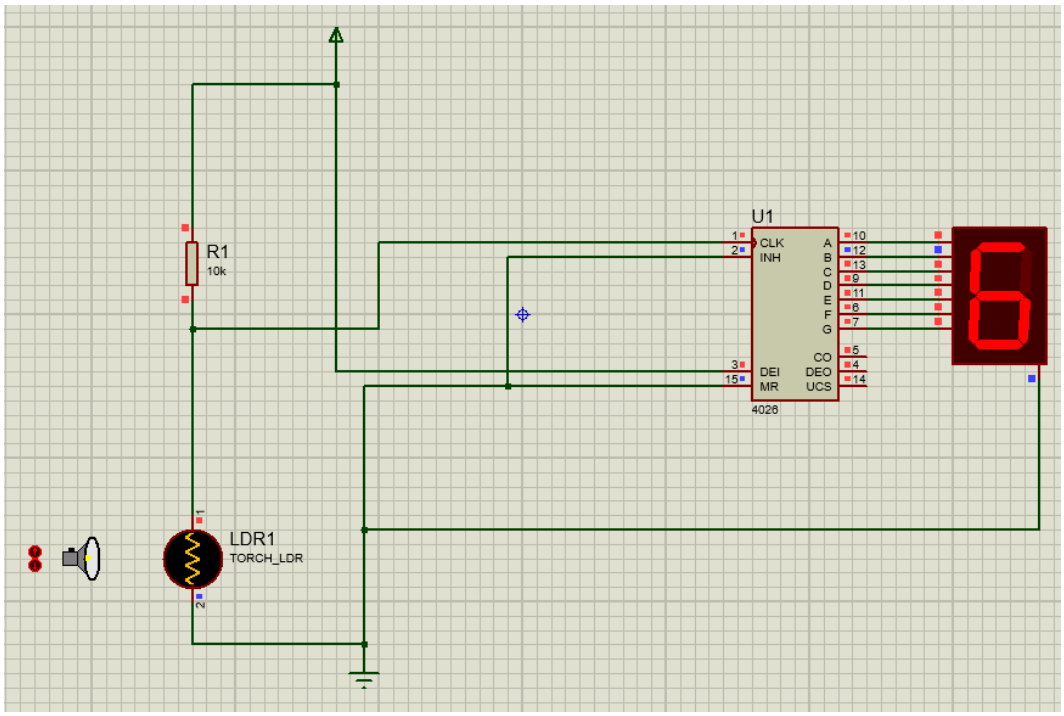
Now I have press '+' and '-' 6 times, so the count on LED is 6.