Practical 7

Aim: Build an IoT system to vend ticket before entering the bus.

Theory:

RFID (radio frequency identification):

RFID (radio frequency identification) is a form of wireless communication that incorporates the use of electromagnetic or electrostatic coupling in the radio frequency portion of the electromagnetic spectrum to uniquely identify an object, animal or person.

There are two main types of RFID tags:

- Active RFID. An active RFID tag has its own power source, often a battery.
- Passive RFID. A passive RFID tag receives its power from the reading antenna, whose electromagnetic wave induces a current in the RFID tag's antenna.

Some common uses for RFID applications include:

- asset tracking and equipment tracking
- inventory control
- vehicle tracking
- access control in security situations
- shipping
- healthcare
- manufacturing
- retail sales
- tap-and-go credit card payments

Home gateway: Home gateway has four Ethernet ports and wireless access point configured with the "Home Gateway" service set identifier (SSID).

All the devices are connected to gateway using config menu in each device, the name of the gateway has to entered.

This can be repeated to all sets of devices that has to be controlled in a home gateway. Ip config menu displays the list of devices connected to the home gateway

Sadiq S.

Requirement:

- RFID Card
- RFID Reader
- MCU Board
- LCD Display
- Door
- Home Gateway
- PC

Step 1: Configure the system

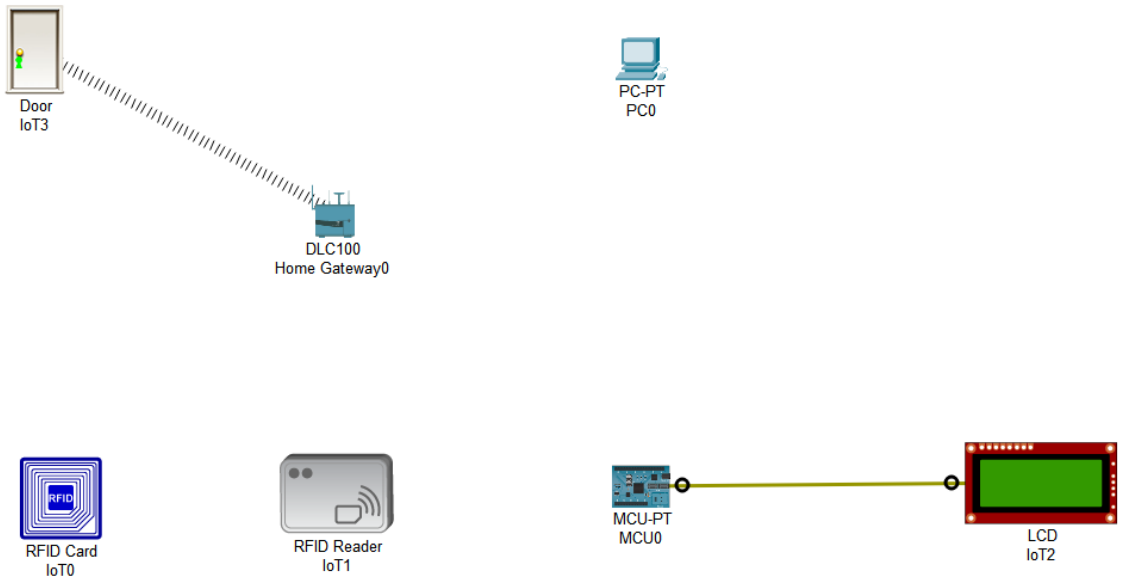

1. Connect LCD Display to MCU Board with IoT custom cables on the D0 port for both sides.
2. To connect RFID Reader to MCU, we have to go to I/O Config and set the Analog Slots to 2.
   And we will get 2 slots in RFID reader. Connect RFID reader to MCU board on port A1 on both the side.

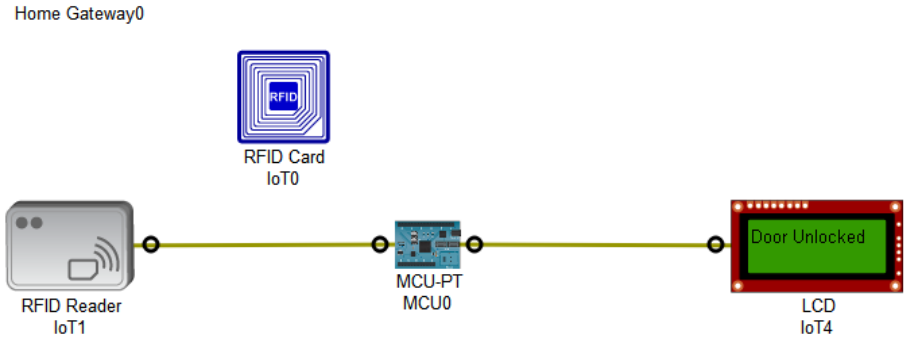

Step 2: Configure RFID Reader:

1. We have to connect RFID Reader to Gateway. So we will change the Network Adapter to 'PT-IOT-1W-AC'.

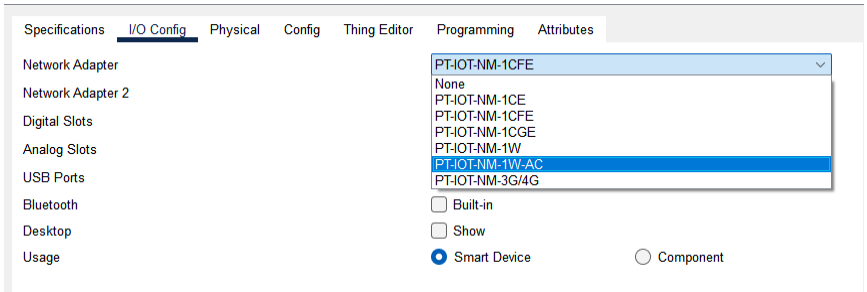

2. It will automatically get connected to the gateway.

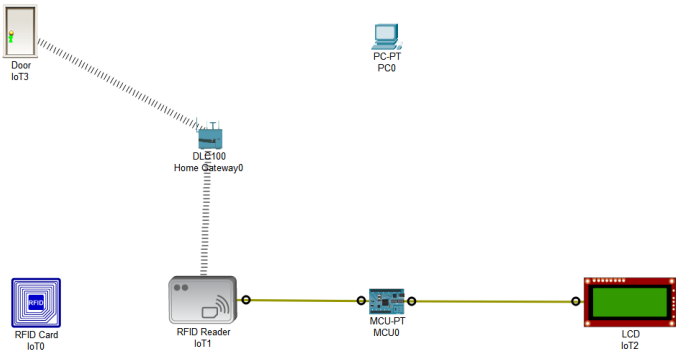

Step 3: Configure the PC:

1. To connect the PC to the gateway we replace its network component with a wireless one in the physical section of PC.

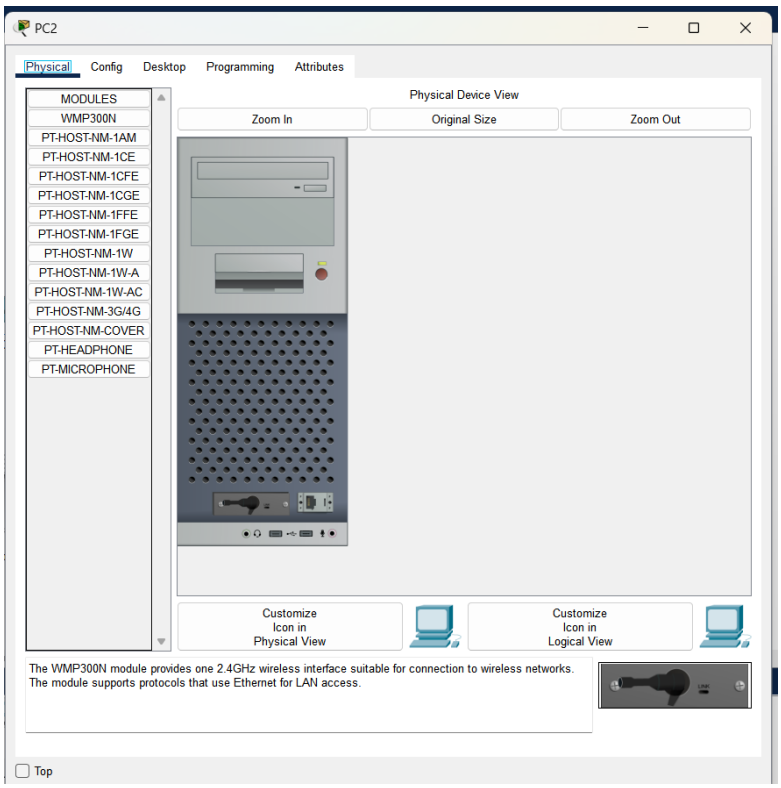

Our diagram will look like this, if all the configuration are made properly.

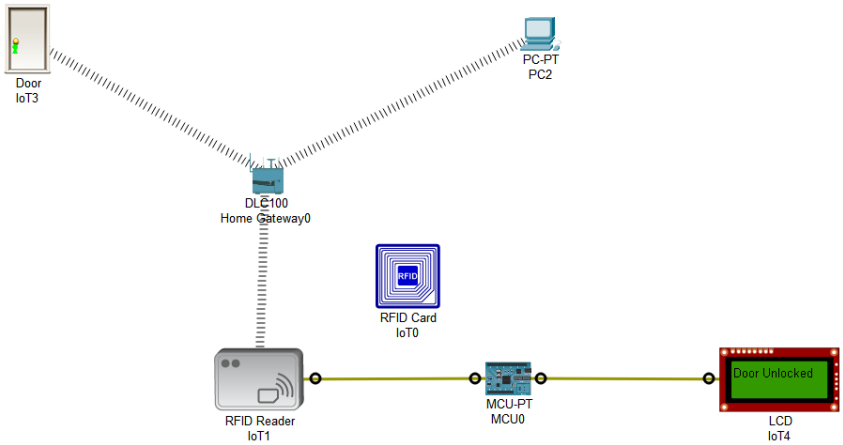

Step 4: Set SSID to HomeGateway in PC.

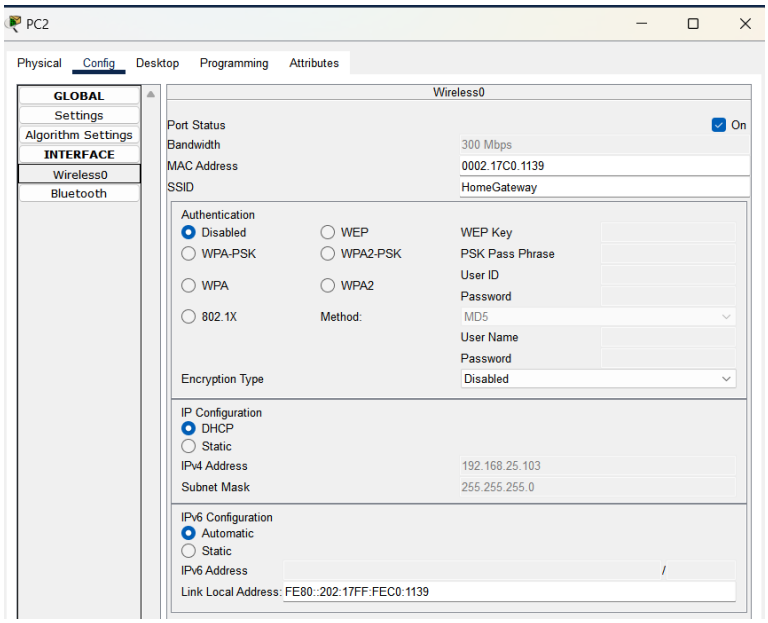

Step 5: We will write the code in python.

Now on MCU Board create an empty python project and type the code and run it.

```python
from gpio import *
from time import *
from ioeclient import IoEClient

def main():
    pinMode(0, OUT)
    pinMode(1, IN)

    while True:
        customWrite(0, "Door Locked")
        rfid = analogRead(A1)

        if rfid == 0:
            customWrite(0, "Door Unlocked")
            delay(3000)

if __name__ == "__main__":
    main()
```

Step 6: Now we will set IoTServer as 'HomeGateway' in all the devices.

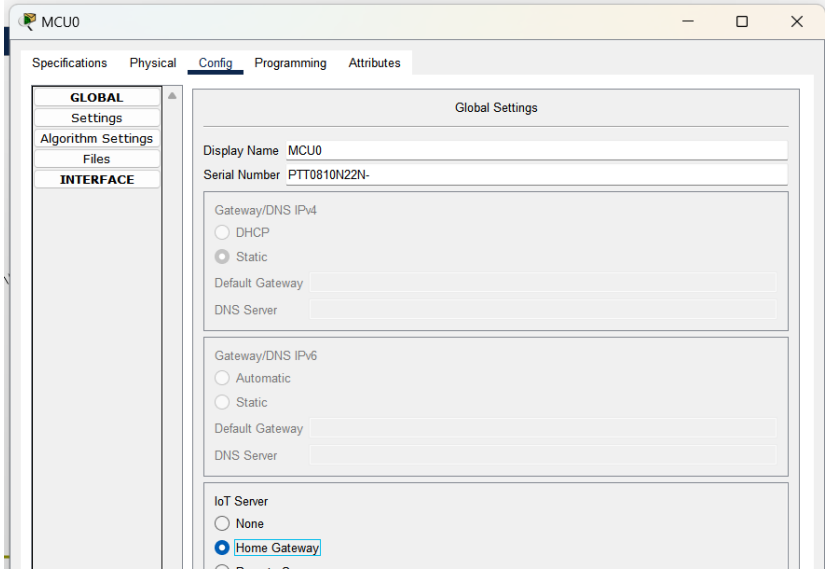

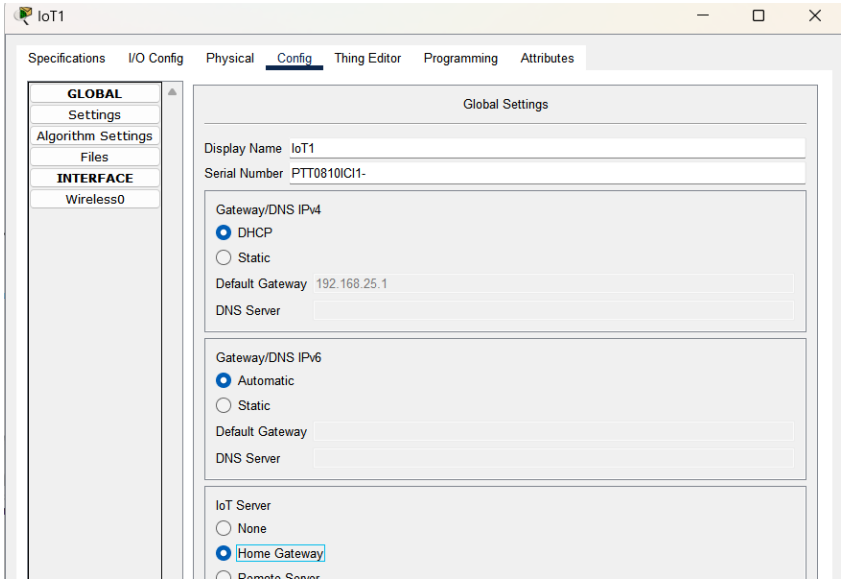

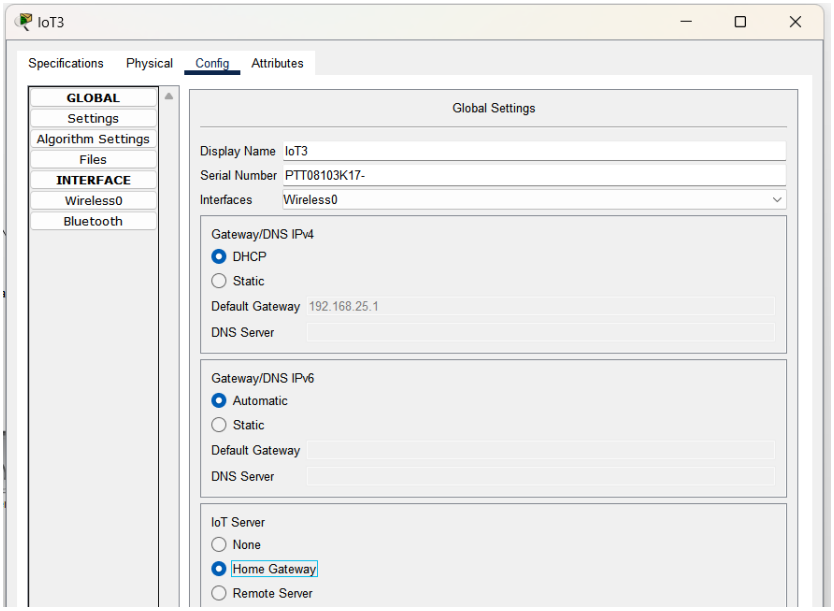

Step 7: Now in RFID Reader, go to programming and make the following changes in the loop function of main.py

Add the following line of code above delay(DELAY_TIME):

ifcardID == ‘1001’:

setState(0)

else:

setState(1)

the loop function should look like this:

```
    else:
        if lastCardID != cardID:
            lastCardID = cardID
            sendReport()

    if cardID == '1001':
        setState(0)
    else:
        setState(1)

    delay(DELAY_TIME)



def setState(newState):
```

Step 8: In PC, go to desktop and in desktop go to IoT Monitor and check RFID Reader and Door is present as below:

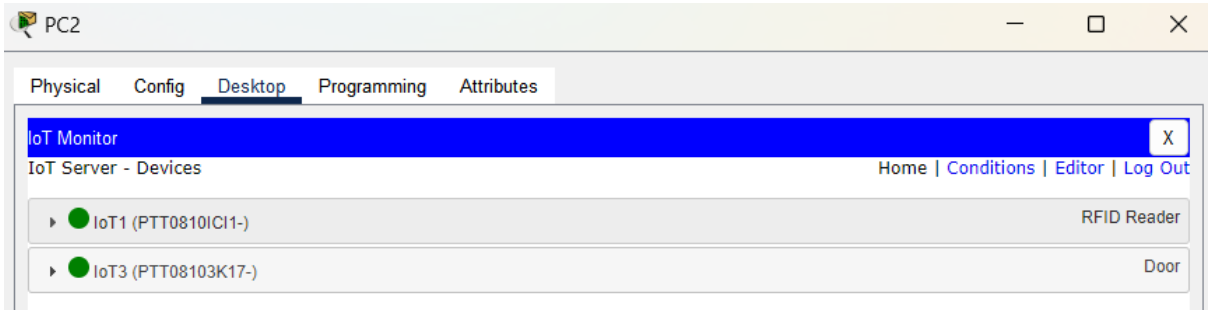

IoT1 = RFID Reader

IoT3 = Door

Step 9: In IoT Monitor we have to created conditions i.e., functions.

Create 2 functions as below:

1. This condition is used to unlock the door.

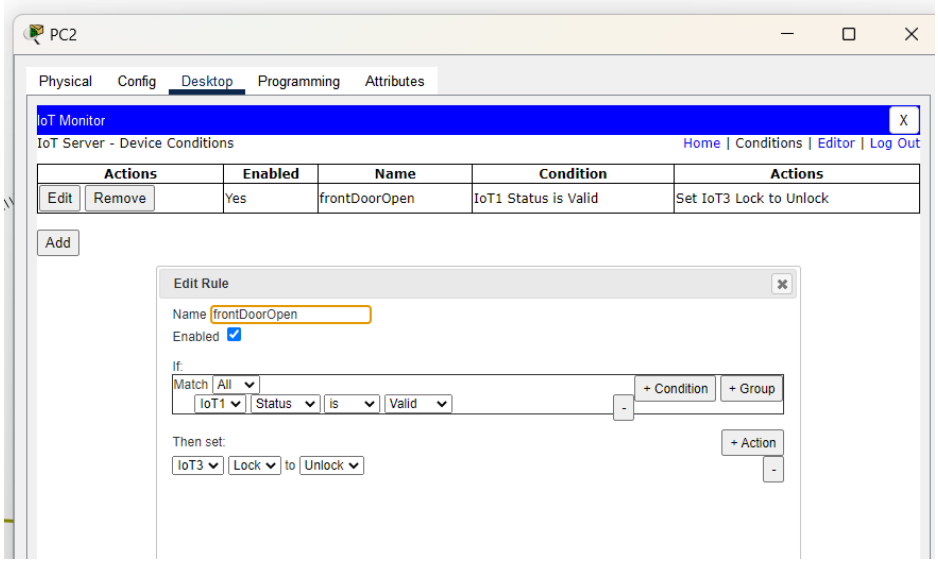

2. This condition is used to lock the door.

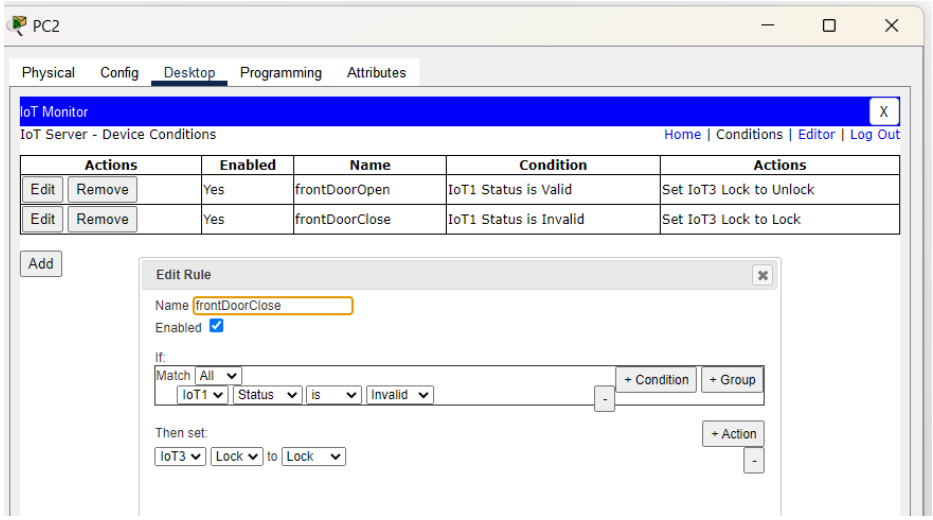

The 2 conditions will look like this:

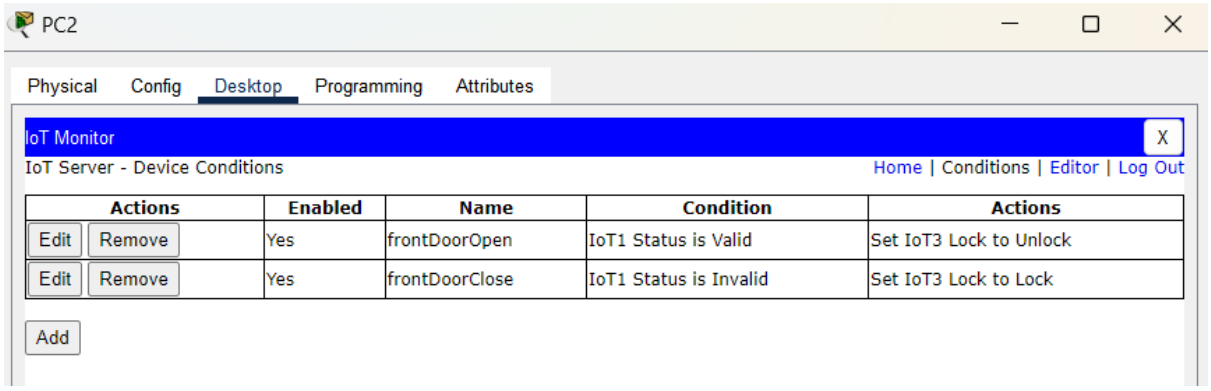

Output:

Door is Locked: I haven't placed the RFID card over RFID Reader so the door is displayed as locked in LCD Display.

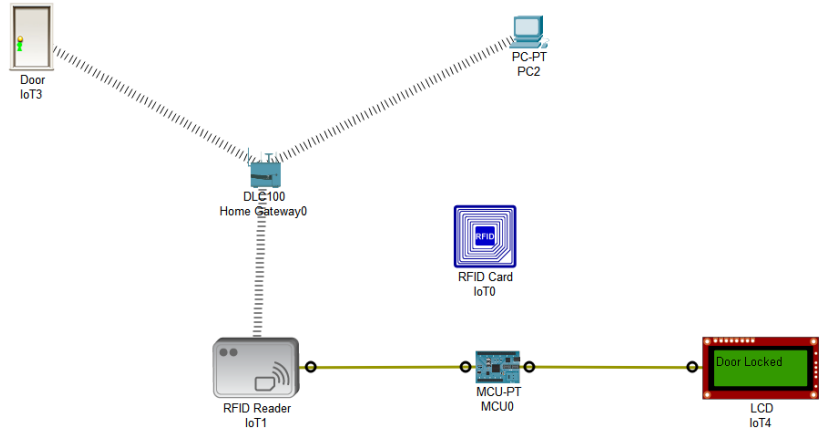

Door is Unlocked: I have now placed the RFID card over RFID Reader so the door is displayed as unlocked in LCD Display.

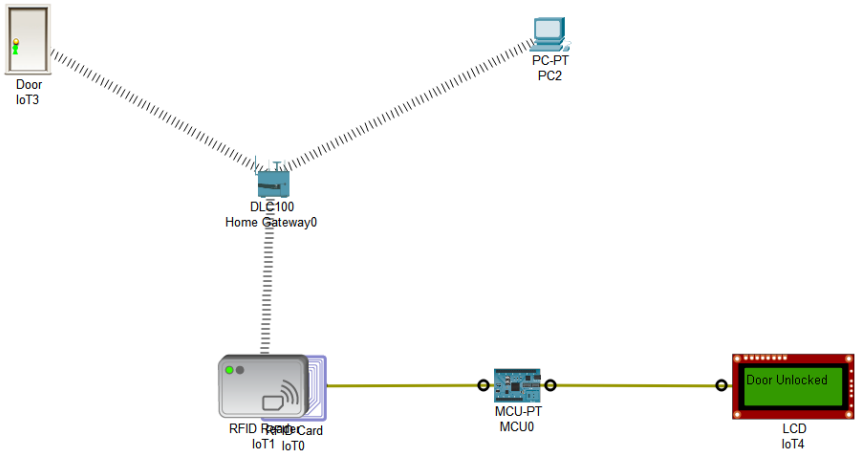
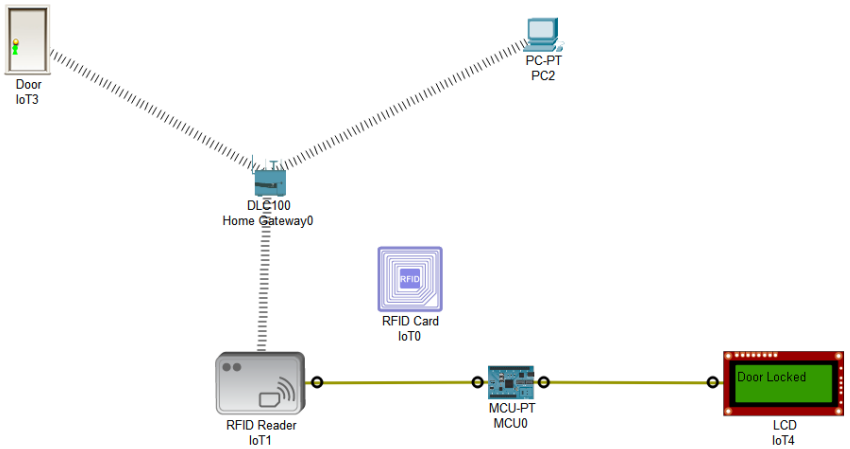
Door is Locked: I have now removed the RFID card over RFID Reader so the door will again be displayed as locked in LCD Display.