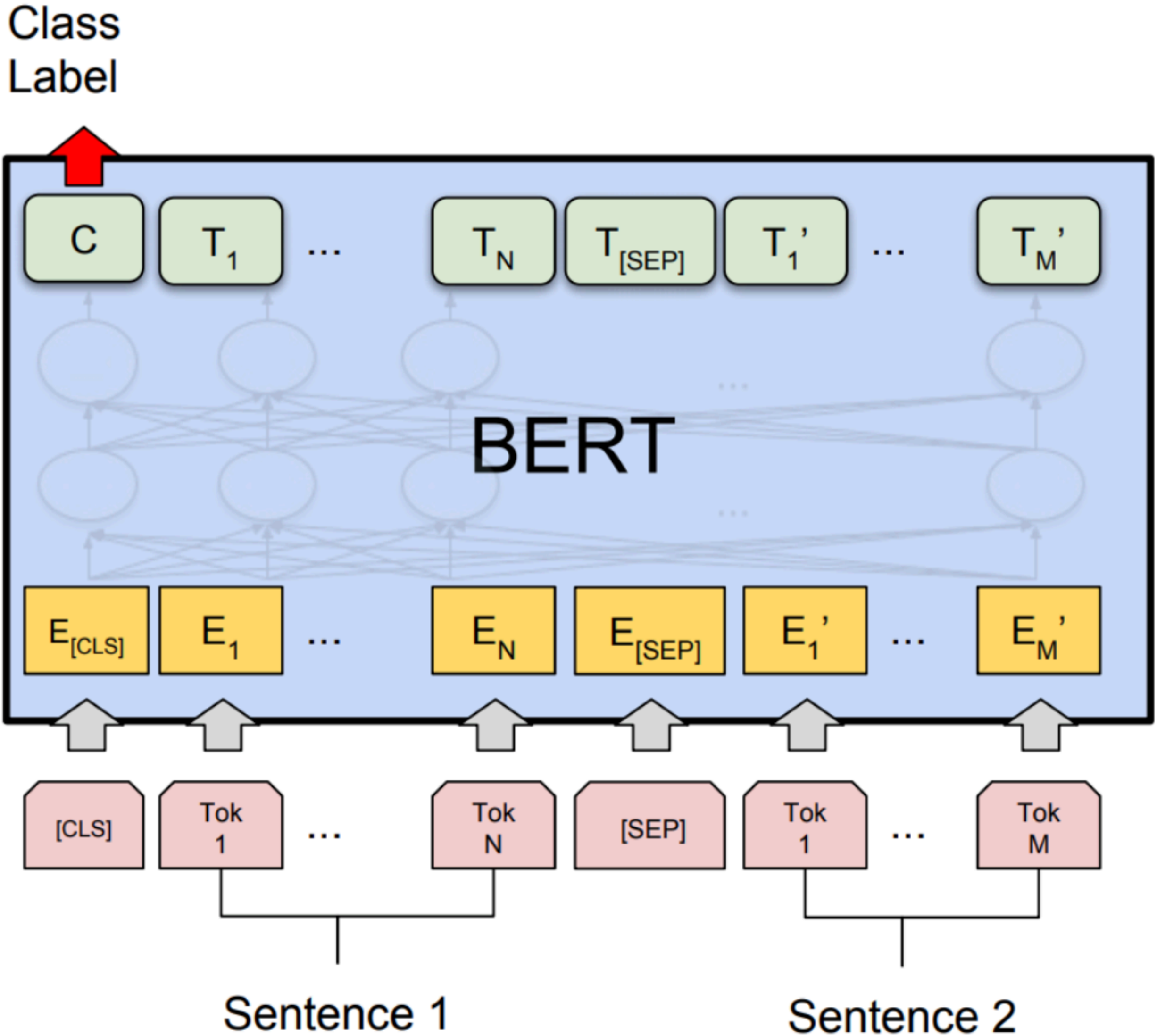
Class
Label
C
T1
...
TN
T[SEP]
T1'
...
TM'
BERT
E[CLS]
E1
...
EN
E[SEP]
E1'
...
EM'
[CLS]
Tok
1
...
Tok
N
[SEP]
Tok
1
...
Tok
M
Sentence 1
Sentence 2