NOTES:
1)THIS DRAWING IS 1:1 SCALE. VERIFY SCALE USING BORDER DIMENSIONS SHOWN.

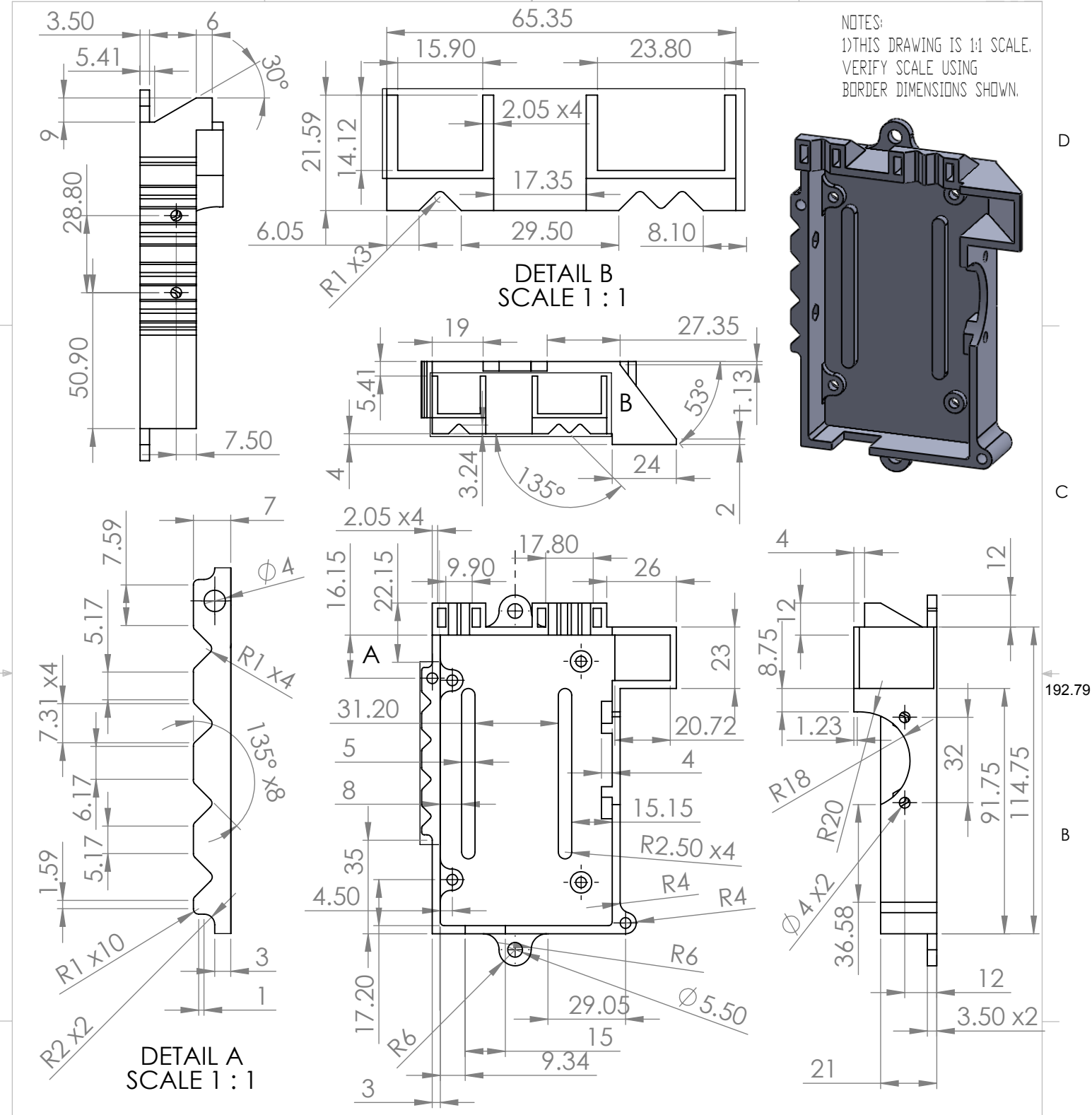


| | | | | | | | | |
|---|---|---|---|---|---|---|---|---|
| | | | | | | NAME | DATE | |
| | | | | MATERIAL: TBD | DRAWN | AVC | 3/9/16 | |
| | | | | UNLESS OTHERWISE SPECIFIED: | | | | |
| | | | | UNITS: MILLIMETER, GRAM, SECOND | | | | |
| | | | | TOLERANCES: | | | | |
| | | | | FRACTIONAL ± 1/16 | | | | |
| | | | | ANGULAR ± 2 DEG | | | | |
| | | | | TWO PLACE DECIMAL ± .100 | | | | |
| | | | | THREE PLACE DECIMAL ± .030 | | | | |
| | | | | THREE PLACE DECIMAL ± .015 | | | | |
| | | | | INTERPRET GEOMETRIC TOLERANCING PER: ASME Y14.5M | | | | |
| ZONE | REV. | DESCRIPTION | DATE | APP. | | | | |
| | | LOG OF REVISIONS | | | | | | |

COMMENTS:
ALL DOCUMENT AND DRAWING REFERENCES ARE LATEST APPROVED REVISIONS, UNLESS NOTED.

Department of Bioengineering
UNIVERSITY OF COLORADO
DENVER | ANSCHUTZ MEDICAL CAMPUS

TITLE
RAMPS Mount (1 of 2)

| SIZE | DWG. NO. | REV. |
|---|---|---|
| A | G1 | N/C |
| SCALE: 1:1 | WEIGHT: N/A | SHEET 1 OF 2 |

SOLIDWORKS Student Edition.
For Academic Use Only.

250.37

NOTES:
1)THIS DRAWING IS 1:1 SCALE. VERIFY SCALE USING BORDER DIMENSIONS SHOWN.

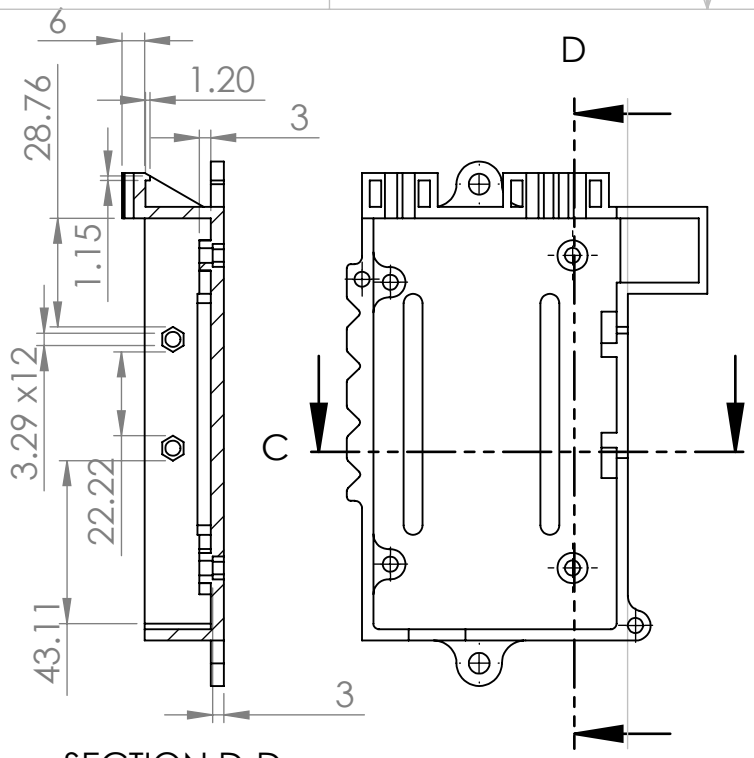


SECTION D-D

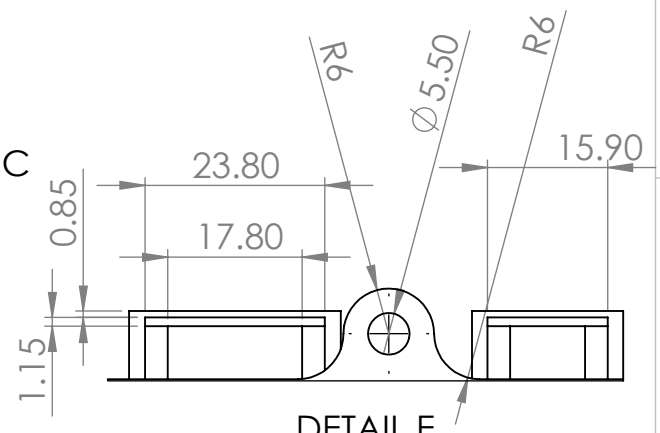


DETAIL E
SCALE 1 : 1

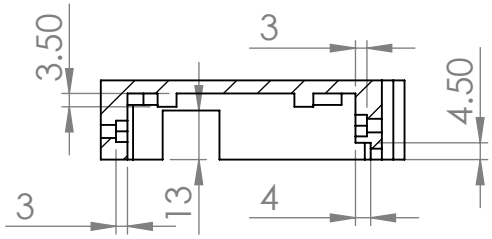


SECTION C-C

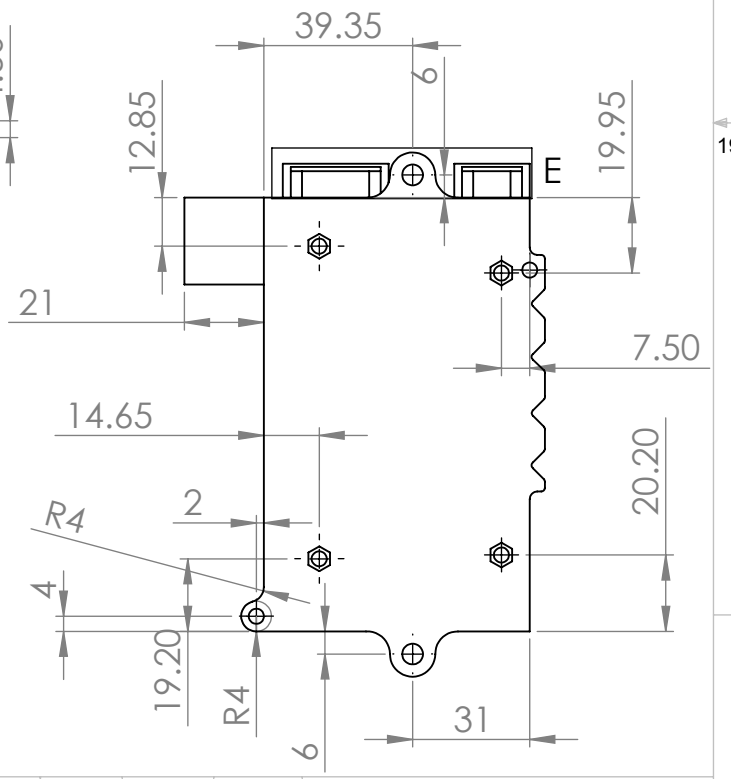


192.79

250.37

| | | | | | | | |
|---|---|---|---|---|---|---|---|
| ZONE | REV. | DESCRIPTION | DATE | APP. | | | |

LOG OF REVISIONS

MATERIAL: TBD

UNLESS OTHERWISE SPECIFIED:
UNITS:
MILLIMETER, GRAM, SECOND
TOLERANCES:
FRACTIONAL ± 1/16
ANGULAR ± 2 DEG
TWO PLACE DECIMAL ± .100
THREE PLACE DECIMAL ± .030
THREE PLACE DECIMAL ± .015
INTERPRET GEOMETRIC TOLERANCING PER: ASME Y14.5M

| | NAME | DATE |
|---|---|---|
| DRAWN | AVC | 3/9/16 |

COMMENTS:
ALL DOCUMENT AND DRAWING REFERENCES ARE LATEST APPROVED REVISIONS, UNLESS NOTED.

Department of Bioengineering
UNIVERSITY OF COLORADO
DENVER | ANSCHUTZ MEDICAL CAMPUS

TITLE
RAMPS Mount (2 of 2)

| SIZE | DWG. NO. | REV. |
|---|---|---|
| A | G1 | N/C |

SCALE: 1:1 | WEIGHT: N/A | SHEET 2 OF 2

SOLIDWORKS Student Edition.
For Academic Use Only.