NOTES:
1)THIS DRAWING IS 1:1 SCALE.
VERIFY SCALE USING
BORDER DIMENSIONS SHOWN.

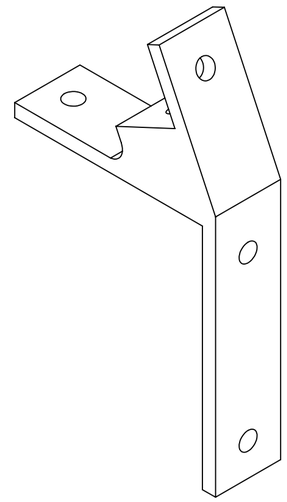

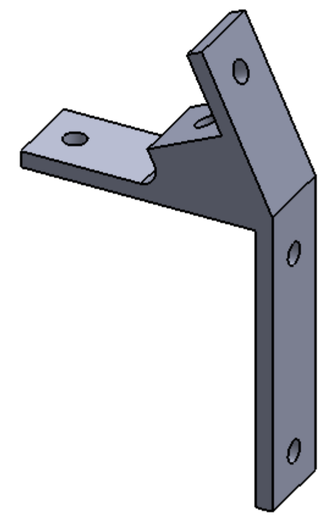

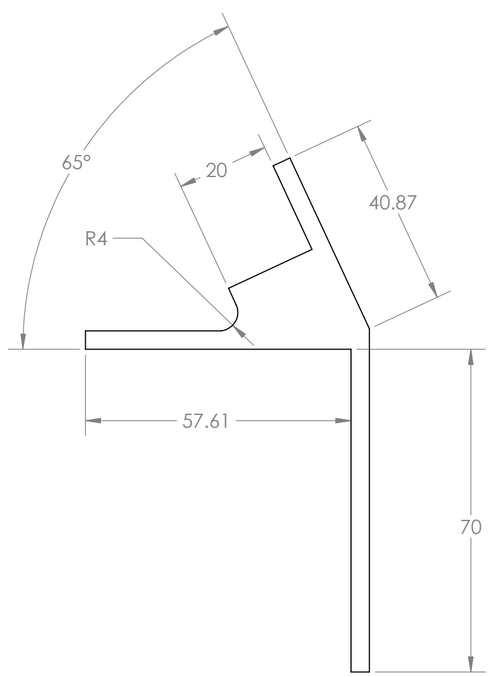

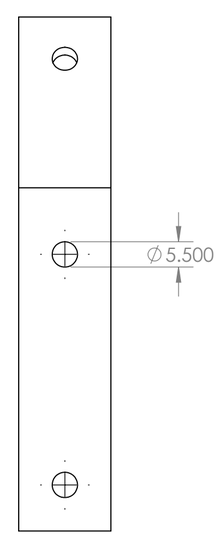

							NAME	DATE
					MATERIAL: TBD	DRAWN	RCC	5/7/16
					UNLESS OTHERWISE SPECIFIED: UNITS: MILLIMETER, GRAM, SECOND TOLERANCES: FRACTIONAL± 1/16 ANGULAR± 2 DEG ONE PLACE DECIMAL ± .100 TWO PLACE DECIMAL ± .030 THREE PLACE DECIMAL ± .015			
ZONE	REV.	DESCRIPTION	DATE	APP	INTERPRET GEOMETRIC TOLERANCING PER: ASME Y14.5M	COMMENTS: ALL DOCUMENT AND DRAWING REFERENCES ARE LATEST APPROVED REVISIONS, UNLESS NOTED.		
LOG OF REVISIONS								

Department of Bioengineering
ANSCHUTZ MEDICAL CAMPUS
DENVER | ANSCHUTZ MEDICAL CAMPUS

TITLE
Lower Middle Vertex

SIZE	DWG. NO.	REV.
C	A3	N/C
SCALE: 1:1	WEIGHT: N/A	SHEET 1 OF 1

SOLIDWORKS Student Edition.
For Academic Use Only.

533.40
412.75