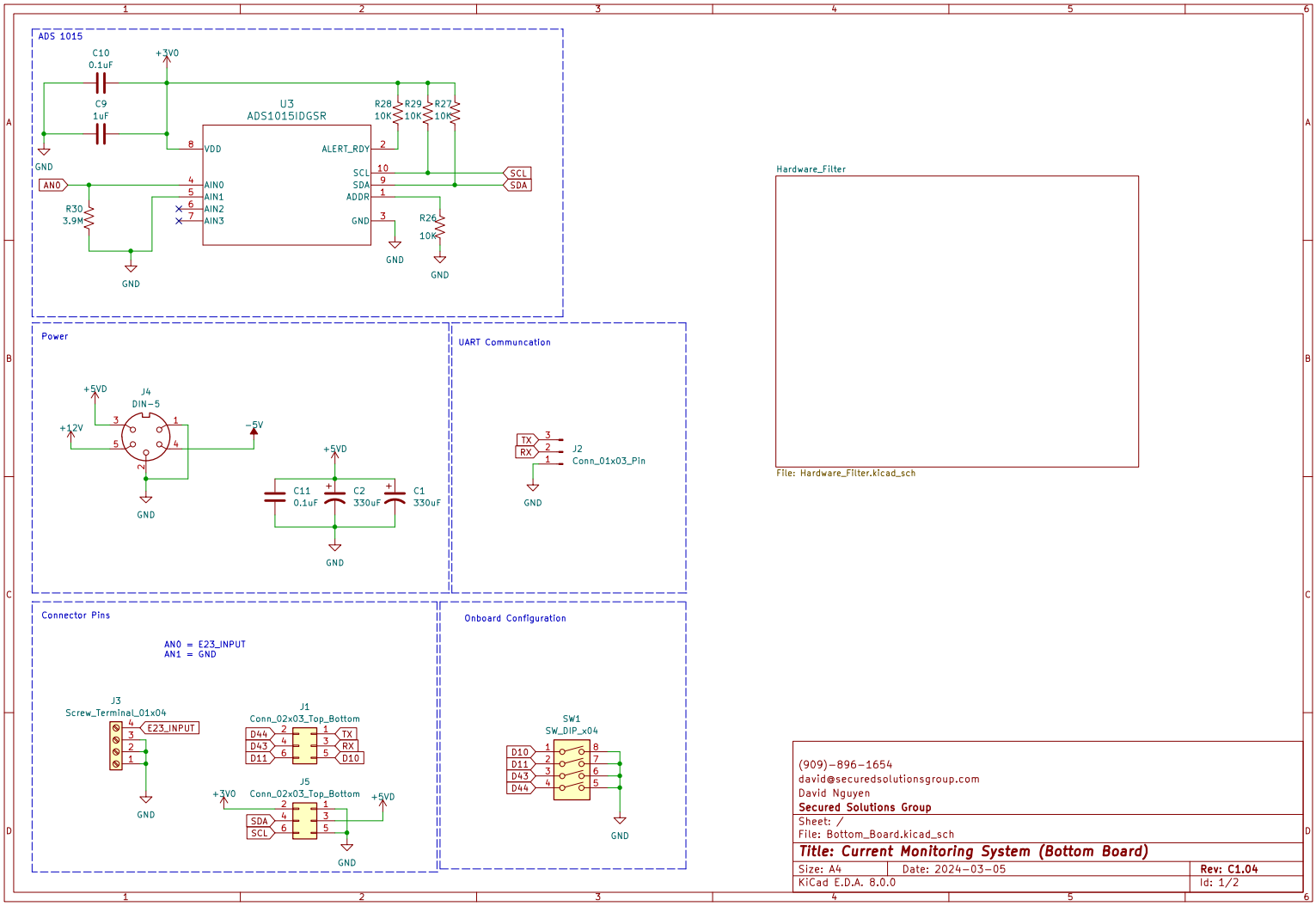

(909)-896-1654
david@securedsolutionsgroup.com
David Nguyen
Secured Solutions Group

Sheet: /
File: Bottom_Board.kicad_sch

Title: Current Monitoring System (Bottom Board)

Size: A4	Date: 2024-03-05	**Rev: C1.04**
KiCad E.D.A. 8.0.0		Id: 1/2

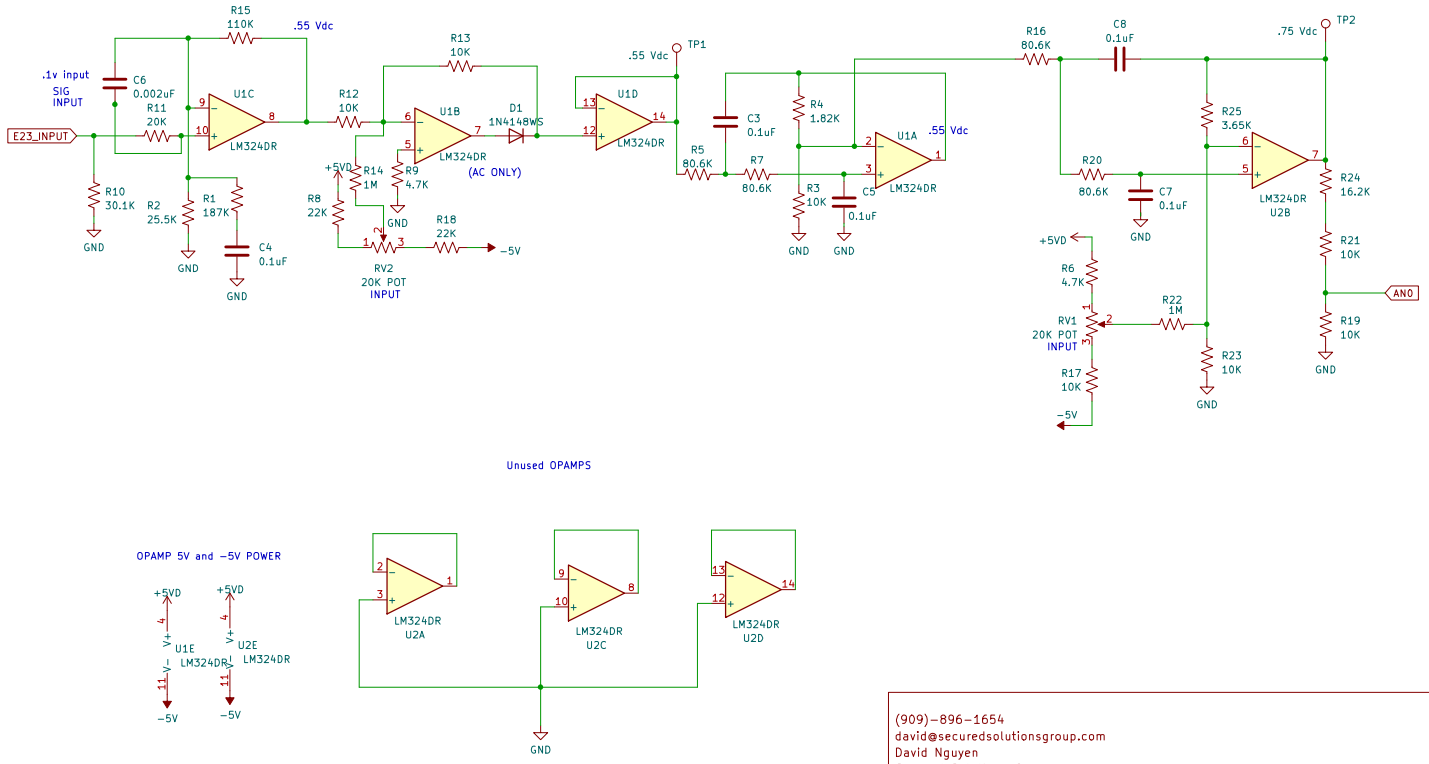

Unused OPAMPS

(909)-896-1654
david@securedsolutionsgroup.com
David Nguyen
Secured Solutions Group

Sheet: /Hardware_Filter/
File: Hardware_Filter.kicad_sch

Title: Current Monitoring System (Bottom Board)

Size: A4	Date: 2024-03-05	**Rev: C1.04**
KiCad E.D.A. 8.0.0		Id: 2/2