INSTALLATION INSTRUCTIONS

UNPACKING

1.Scratch or remove the sealing tape and take out the unit.
2.Follow the **ATTACHMENT** to check all items and to see if there are any omissions.
3.Check the unit is correct and whether it matches with order model.
4.Check whether the unit has defects or is damaged due to defectiveness or transportation.
5.Make sure all packaging is disposed of responsibly and in accordance with the current regulations in your region.

TOOLS/MATERIALS REQUIRED (NOT INCLUDED)

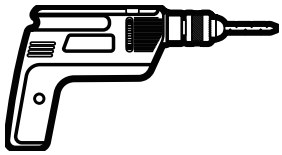
Electric drill

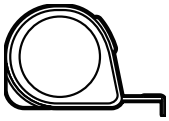
Measuring tape

Safety gloves

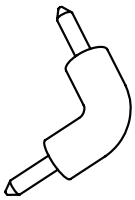
Electric elbow tool

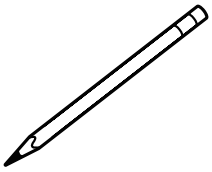
Pencil

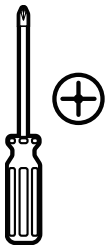
Phillips screwdriver

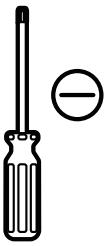
Slotted screwdriver

BEFORE INSTALLATION

1. Installer or end user must read and understand all the content covered in this manual before installing or using this unit.
2. Choose a suitable installation location according to the installation conditions stated in the warning.
3. Make sure that the installation location complies with current laws and regulations.
4. Confirm that there is a suitable input voltage power supply at the installation site (consistent with the nominal power supply of the product).
5. Make sure the supplied fixings are suitable for the mounting location. If not suitable, alternatives must be obtained locally before proceeding with the installation.

INSTALLATION INSTRUCTIONS

ATTACHMENT

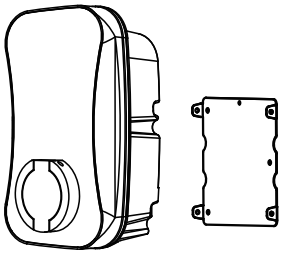

1 x EV Charger & 1 x Fixing bracket *

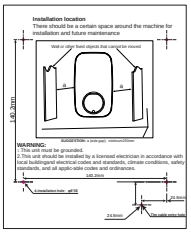

Installation template

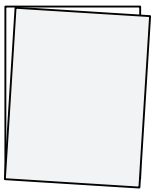

Manual

Elbow wrench

Wiring cap

Sealing rubber

Cable Gland

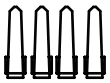

4 x Wall Plugs
Φ6x30

4 x Screw
ST4.2x32

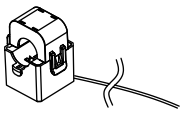

CT**

CT wire terminal**

Sealing rubber***

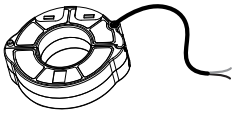

CT(400A)****

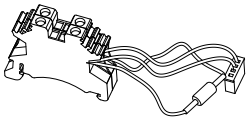

Main/Tail subordinate charger connector****

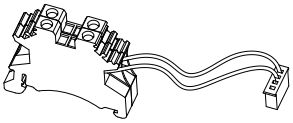

subordinate charger connector****

Shielded twisted-pair****

* NOTE: It is integrated from factory, and separated when installed.
** Just for charger with power management
*** Both for charger with power management and OCPP

****Use for EV charger group management model.
NOTE: These spare parts are not included in the unit, you must buy from distributors.

INSTALLATION LOCATION

There should be a certain space around the unit for installation and future maintenance.

SUGGESTION:
a (side gap): minimum 250mm.

*A charging cable holder position needs to be reserved. (Just for connector charger and cable)

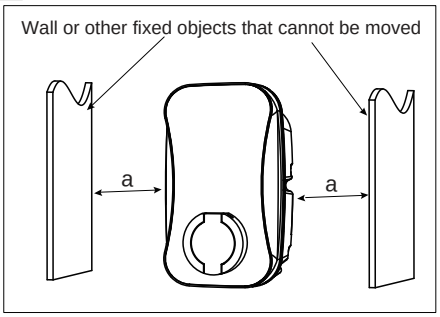

INSTALLATION INSTRUCTIONS

WARNING

▲ Make sure that the power source is turned off before installing the unit.
▲ Manufacturers and distributors are not responsible for any loss or related responsibilities caused by any incorrect installation.
▲ The installer shall be responsible for the loss and damage of the product, system or property caused by improper installation.

CONNECT ELECTRICAL WIRING

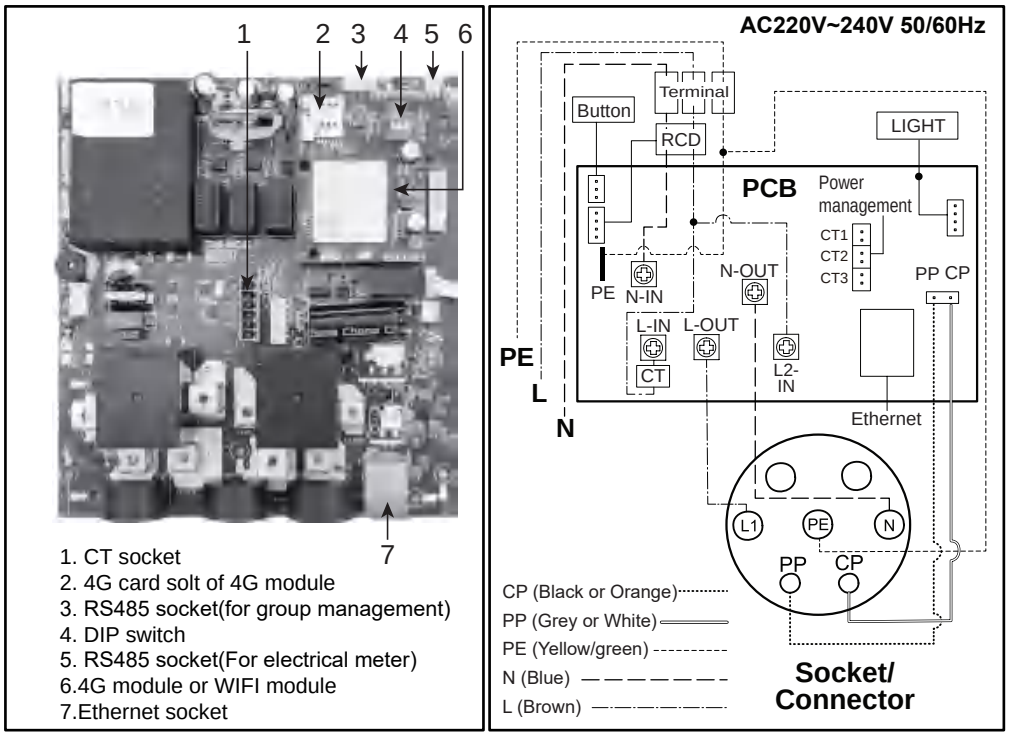

Note 1: The charger must be electrically protected by installing externally a Miniature Circuit Breaker (MCB) and a Residual Current Circuit Breaker(RCCB).
MCB: Maximum value according to the maximum output current of the load point.
Reference SET THE DIP SWITCH.
RCCB: According to local regulations, Type A or Type B.

Note 2: Input voltage power supply consistent with the nominal power supply of the product.

INSTALLATION INSTRUCTIONS

INSTALLATION

1. Take the unit and remove the 4 screws on its fixing bracket (The unit is integrated with the fixing bracket and needs to be disassembled first). Keep the screws and fixing bracket for subsequent use.
2.use the installation template to mark the fixed bracket installation hole position.
Note : Make sure that the installation template itself is level when the position is marked.

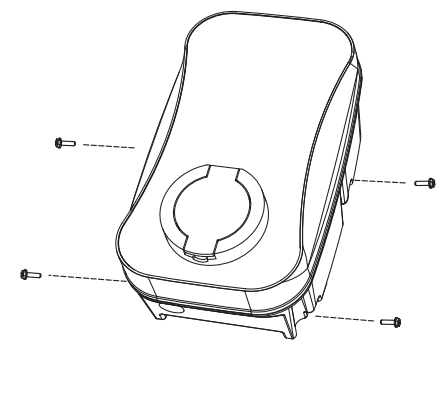

Fig. 1

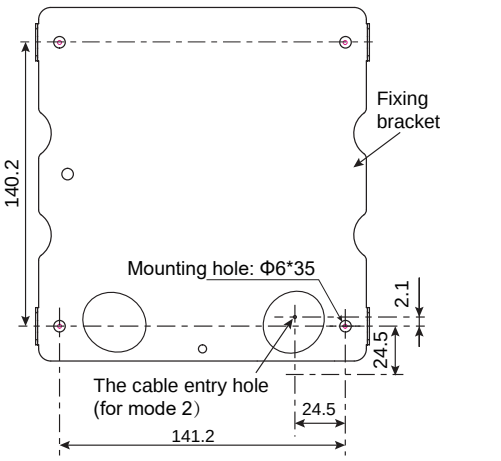

* The installation method 2 in the cable entry manual is used for the back entry, and the bottom installation method 1 is not applicable

Fig. 2 unit: mm

3. Punch holes according to the punching information prompted by the installation template, and ensure that the punch positions are accurate.
Note: Fixed bracket mounting hole has a diameter of 6mm and a depth of about 35mm.
Caution: The edge of the wall opening needs to be repaired, and it must not be a sharp edge to prevent the incoming wire from being cut.
4. Fixing bracket installation hole inner - insert wall plugs, and use attachement screws(ST4.2*32) fixing fixed bracket to the mounting surface and ensure the screws are fastened well.
Note: If the screws are not fastened well, the fixing bracket may become loose and may interfere with the installation of the housing.
5. Screw the unit to the fixed bracket.
Caution: Use the screws removed from the original position.
6. Connect the input cabel to power supply.

INSTALLATION INSTRUCTIONS

* **NOTE:** Product installation details with OCPP1.6J service agreement. Refer to "**Network Connection guide**".
** **NOTE:** Configure URL / ID / APN by PC. Refer to "**Configure URL/ID/APN using Ethernet**".
*** **NOTE:** Product installation details with power management. Refer to "**Power management function installation guide**".
****NOTE:** Product installation details with charger group management .Refer to"**EV charger group management model guide**."

Network Connection guide

1. Drill holes according to Fig.7.
2. Use the accessory sealing rubber to fix the network cable.
3. One hole of the sealing rubber be cut open with knife, insert the network cable into the sealing rubber, then insert them into the housing, as Fig.8; Reserve enough length of the network cable to ensure that it can be well connected with the Ethernet socket;
NOTE: During installation, if the network cable line and the plug is separate, you don't have to cut the sealing rubber.
Warning: Seal the opening on the back to achieve the unit's IP rating. Sealing is very important. This involves the safety of the product and must be paid attention.
4. Network cable plug is docked to Ethernet socket.

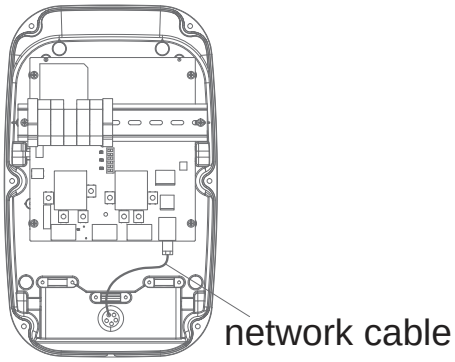

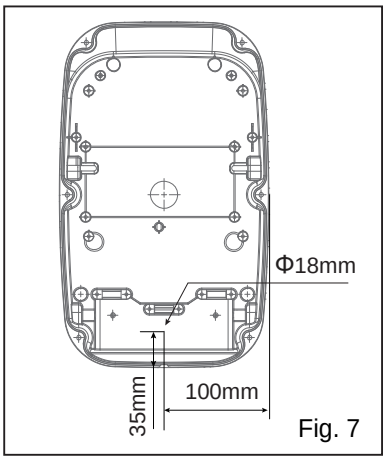

Fig. 7

INSTALLATION INSTRUCTIONS

Configure URL/ID/APN using Ethernet

WARNING: This operation must be completed by qualified electrical installers.

1.Power on the product, on the standby state (the blue light is glowing),press and hold the function button for 10s,when hearing beep twice(It is normal for the red light to flashing during this period),power off the product.

2.After power off the product, connect the product (Ethernet socket on PCB) with the PC by Ethernet cable with double-headed RJ45 plug;
Note: Please refer to the wiring diagram for the location of Ethernet socket on PCB.

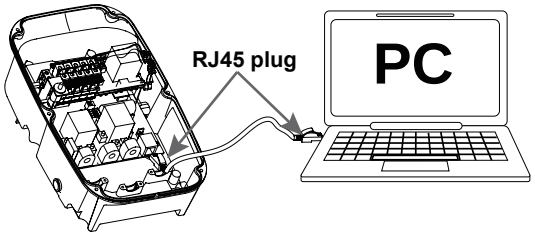

3.Re-power on The product, waiting for the cyan light to turn yellow,then the product has entered the configuration state;

4.Use PC to adjust network properties.
Configure internet Protocol version 4(TCP/IPv4) parameters.
IP address:**192.168.1.26**
Subnet mask:**255.255.255.0**
IPv4 gateway/Router:**192.168.1.1**
Important:
1.Must be filled in strictly according to the above parameters.
2.DNS does not need to be filled in.

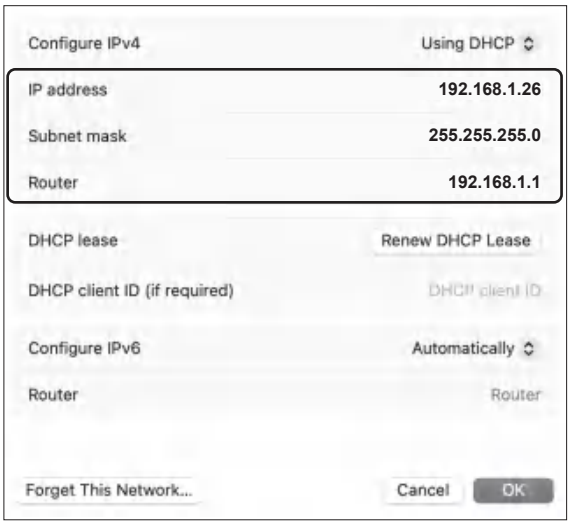

5.Open the Web(Google)Enter **192.168.1.30** to enter the configuration interface.
Important: The website must be :**192.168.1.30**.

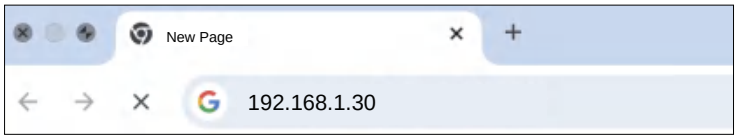

6. After entering the configuration page, you can set **ChargeID(Maxlen 32), Server URL (Maxlen 100)** and **4G APN:**
Note: The URL(Such as : wss://********.***/. Please don't ignore the last character " ***/*** ", as it is very important).
Note: APN is only valid for 4G products.

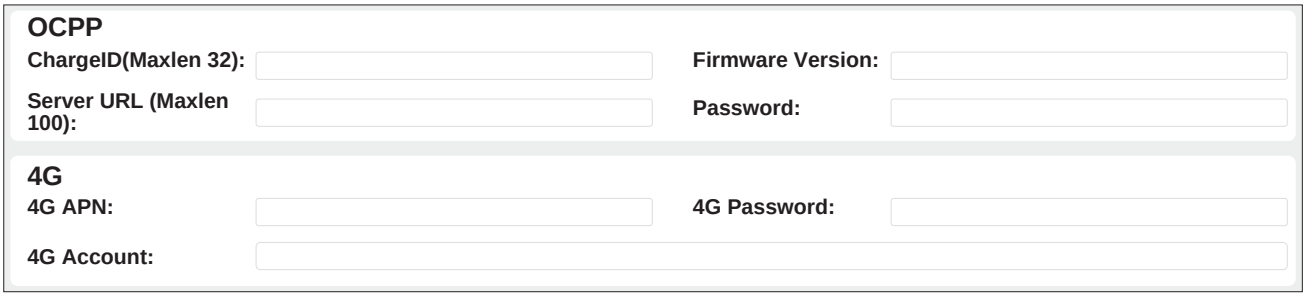

7.After completing the filling, click submit to save,and the configuration completed.

8.Power off again,disconnect the Ethernet cable between the product and PC,and the product needs to replace the network cable with signal. power on,it will automatically connect to the server to enable backstage control.
Note 1**:** network cable with signal such as a router network cable.

INSTALLATION INSTRUCTIONS

Power management function installation guide

1. Drill holes according to fig.5.
2. Use the accessory sealing rubber to fix the CT wire.
3. Insert the sealing part into the housing body(fig.8), thread the CT wire into the sealing part, one hole corresponds to one CT wire , after the CT cable is inserted, reserve enough length to connect to the CT interface.
4. Crimp the CT wire to the CT wire terminal and then insert it into the CT interface.
5. Open the CT and fixed it to the main incoming line (one CT is only allowed to pass through one line.)

NOTE: If there is a need to extend the CT cable, To maintain signal integrity, twisted-pair cable like CAT5(8×24AWG wires inside) must be used.DO NOT use mains cable, bell wire or speaker cable.When using CAT5(8×24AWG wires inside) Ethernet cables for extension:

The number of 24AWG wires	Double wires for one	Triple wires for one	Four wires for one
Max. transmission distance	100m	500m	750m

• **Remember to a separated twisted pair for each CT.**
• When joining CT wires make sure that the ends of the wires are twisted tightly together and joined using crimps, screw terminals or solder.
• Avoid using lever clamp type terminals as these do not provide a reliable connection at very low currents.

Power management Wiring for Single phase models

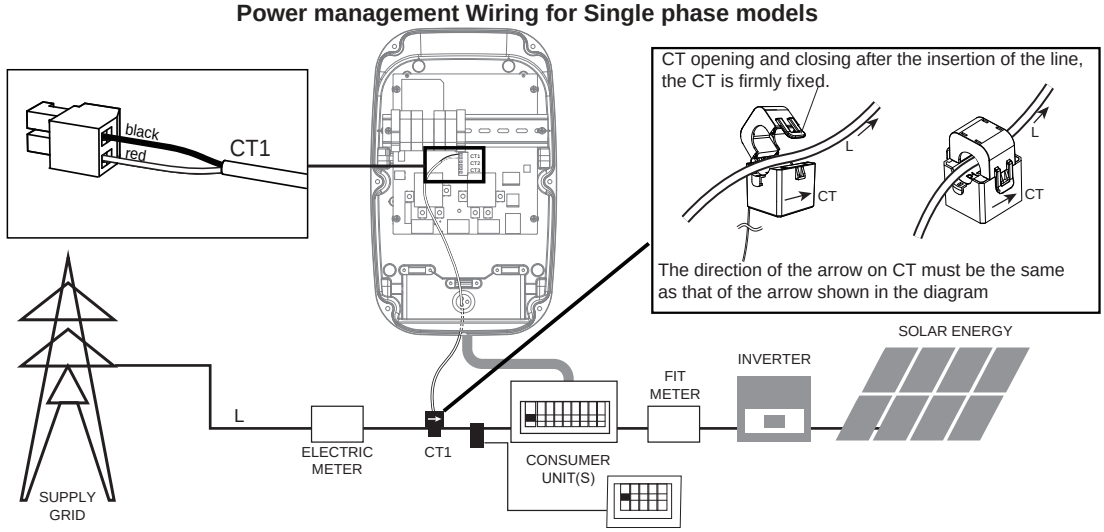

According to the diagram, put the CT of the supply grid balance on the L line (L1,L2,L3)of the family main line. The direction of the arrow on CT must be the same as that of the arrow shown in the diagram. Press it to the matching terminal CT1/CT2/CT3.

INSTALLATION INSTRUCTIONS

EV charger group management model guide

Only needed with installing more than one charger.

IMPORTANT:

1.Before using the charger group management model, you need to know the **Main charger** and the **subordinate charger**.

Main charger:The only charger in the charger group management connected with CT clamp and set as 1300 charger number in APP.

subordinate charger:other chargers in the charger group management（maximum number of chargers that can be group managed is 9 and this is to be set in the App as 1301 – 1309 under enter charging pile code. So for the main charger the code will be 1300 and the second charger as 1301 and the third as 1302 and so on depending on the number of chargers.）and set as 1301-1309 charger number in APP.

NOTE: The setting of charger number refers to "Enter charging pile code" in APP settings.

NOTE: If group management is used then the solar function cannot be used.

INSTALLATION

Fig.8

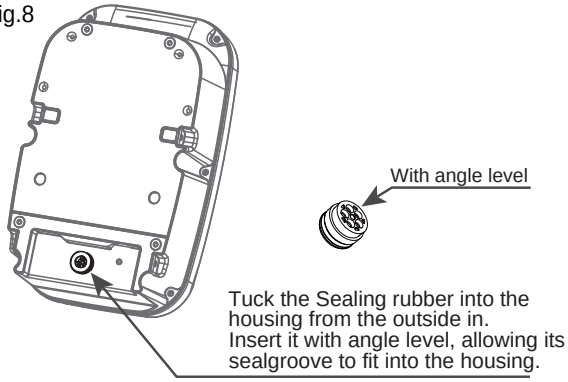

Fig.9

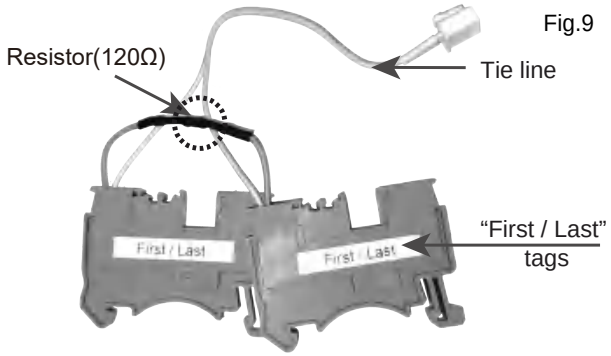

Terminal block(with "First / Last" tags)
For Main charger and Tail subordinate charger

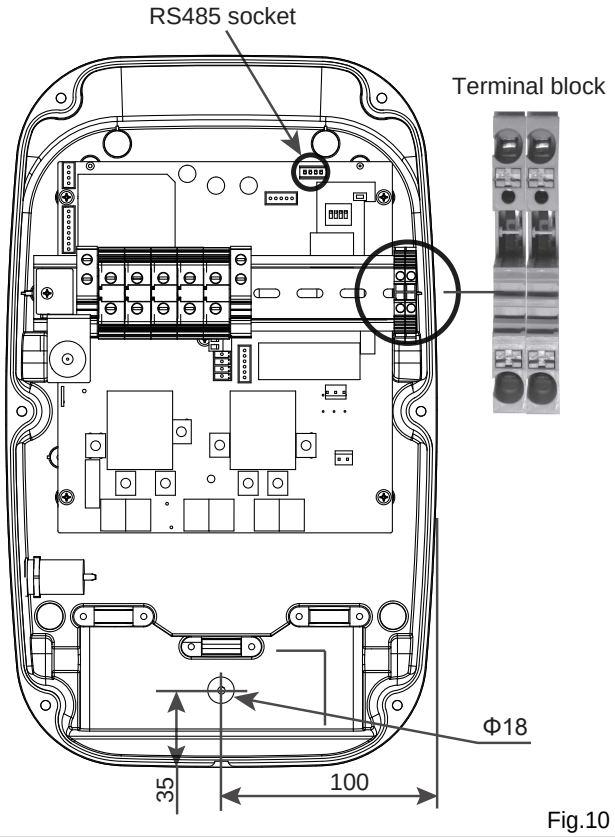

Fig.10

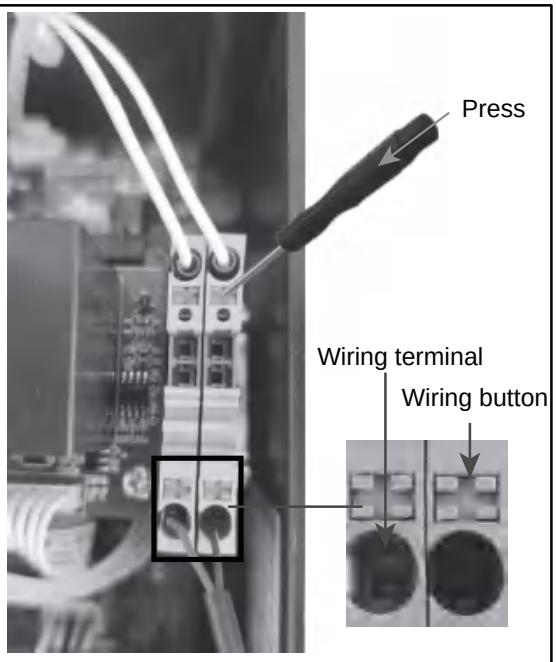

Press down the "**wiring button**" and insert the wire into the wiring terminal.Then release the "Wiring button", to secure the wiring.

After the wiring is completed, use multimeter to check if the wiring of the terminal block is conductive.

Fig.11

INSTALLATION INSTRUCTIONS

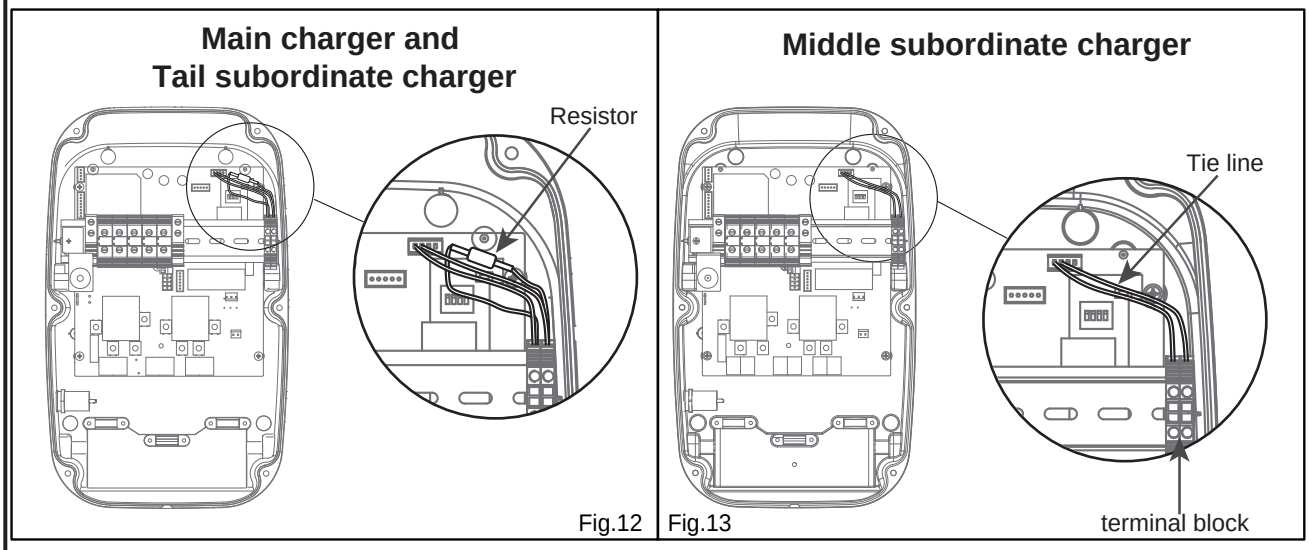

1.Install the terminal block to the track and insert the tie line into RS485 socket.
2.**Main charger and Tail subordinate charger**: Crimp both ends of the resistor(120Ω)and the tie line wire to the terminal block(with First/Last tags-Fig.9),refer to Fig.12.
Middle subordinate charger: Just crimp both ends of the tie line wire to the terminal block. refer to Fig.13.
NOTE: Prohibited connect the resistors to the Middle subordinate chargers**.**
3.Drill holes according to Fig.10.
4.**Main charger**:Use the accessory sealing rubber to fix the CT(400A) wire and shielded twisted-pair.
Subordinate charger:Just fix shielded twisted-pair.
5.Insert the sealing part into the housing body, refer to Fig.8.
Main charger:thread the CT cable and shielded twisted-pair into the sealing part, each group of wires passes through a hole respectively. Then reserve enough length to connect to the CT socket and terminal block.
NOTE: Don't destroy the holes of unused sealing parts.
Subordinate charger:Just thread the twisted-pairs, refer to Fig.14.
6.Crimp the CT wire to the CT wire terminal and then insert it into the CT socket, refer to Fig.14.
7.Crimp the shielded twisted-pair wire to terminal block.
8.Press the red button on the CT clamp to open it and fixed it to the main incoming line (one CT is only allowed to pass through one line.)
9.Connect all shielded twisted-pair from the subordinate charger in parallel to the main charger. refer to Fig.14.

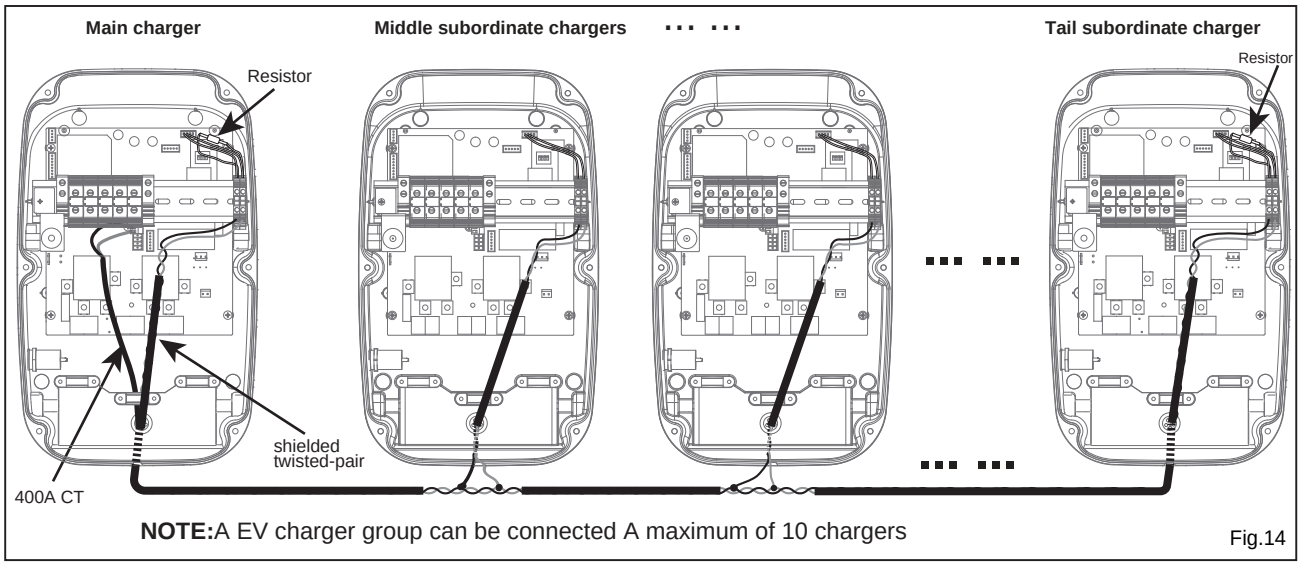

INSTALLATION INSTRUCTIONS

SET THE CHARGER POWER

You need to set the corresponding position of the current DIP switch according to the min. wire size shown in the chart and the rated current of the Circuit breaker. Refer to the steps below.

Caution 1: The following operations must be powered off.
Caution 2: Incorrect setting DIP may cause hazards such as overheating or fire of the incoming wire.

1. Locate the position of the two-position DIP switch on the power supply board, like picture.
2. Setting the switch to the desired position:

WARNING: Electrical Power Switches must only be set by a qualified electrical installer. Incorrect setting may lead to equipment damage and / or personal injury. The current rating must not exceed the supply rating.

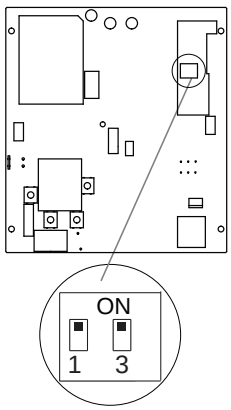

DIP switch position	ON 1	ON 1
Current(A)	32	16
Min. wire size (copper)	6mm² or 10AWG	2.5mm² or 13AWG
Circuit breaker (Amps)	40	20

DIP switch position	ON 3	ON 3
Earth check	Yes	No

INSPECTION

1. Check that this unit must be grounded (Earthed).
2.Make sure you are satisfied that the installation is complete and is in a safe condition.
3.Switch ON the power, which it will cycle the red, blue and green lights to self-check and then enter the corresponding light indication. The unit and test in accordance with the current Electrical Wiring Regulations.
NOTE: Make sure this product has been installed in compliance with the current Electrical Wiring Regulations.