①

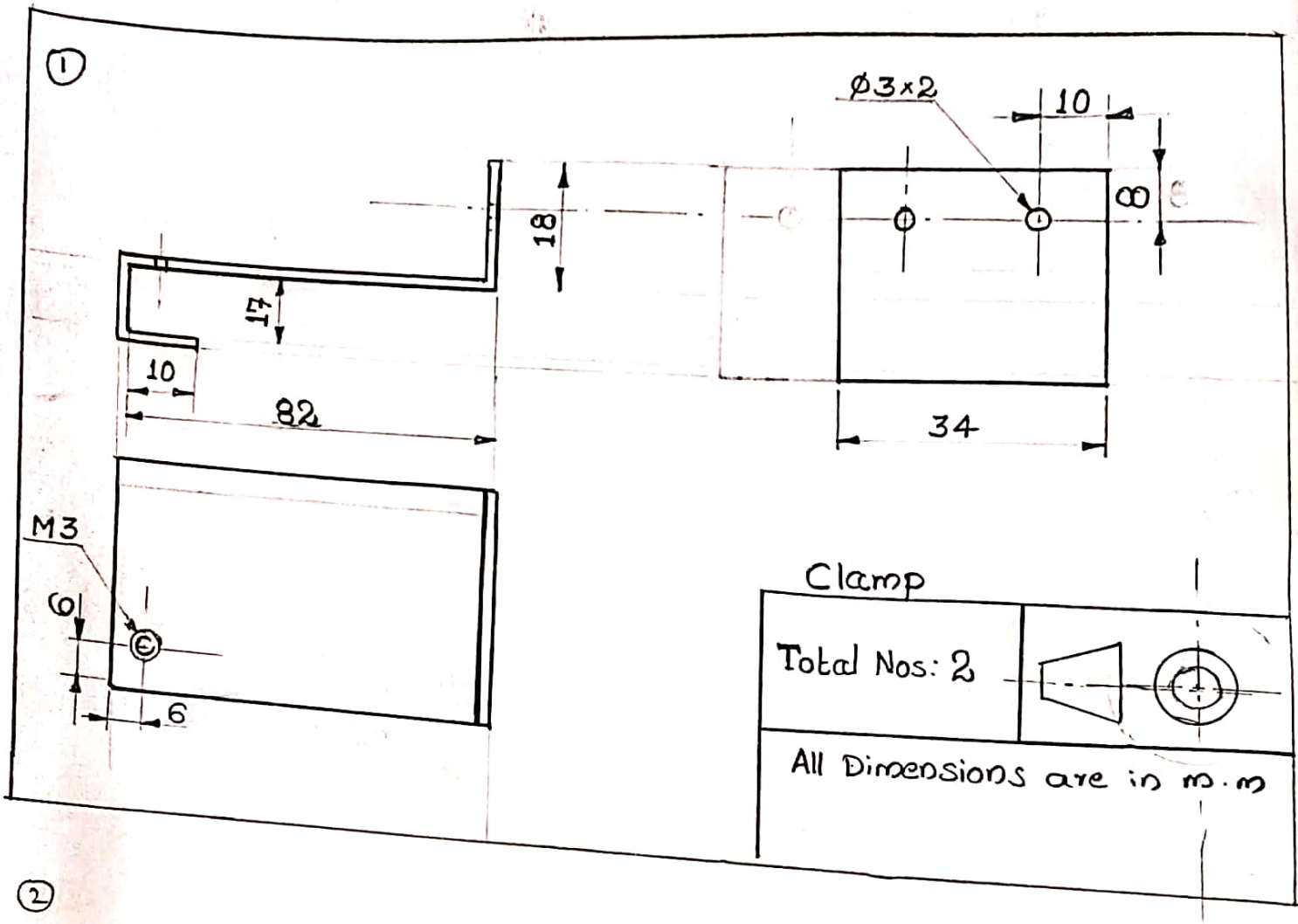

②

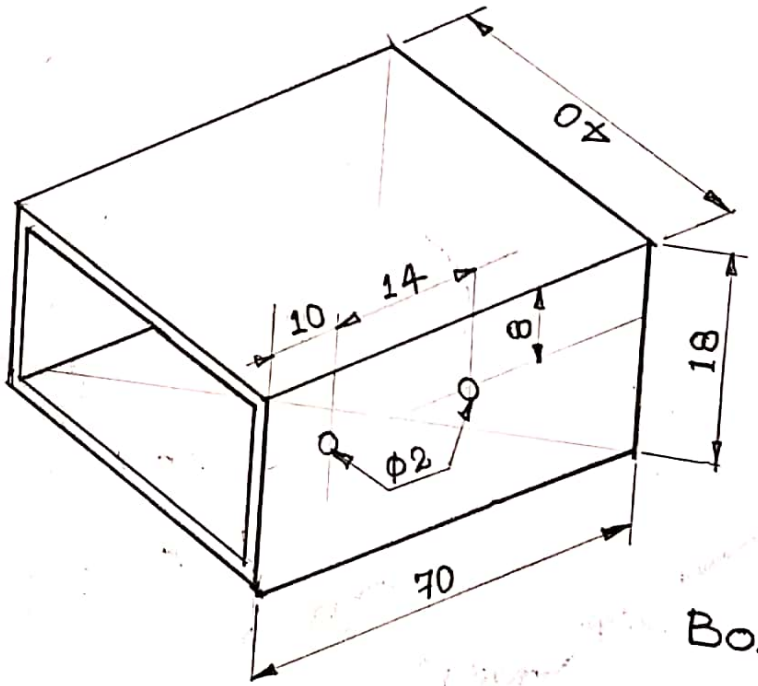

Box

Scanned by CamScanner