REVISION HISTORY			
REV	DESCRIPTION	DATE	APPROVED

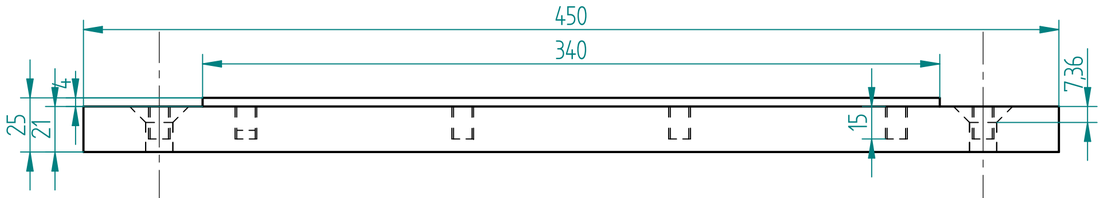

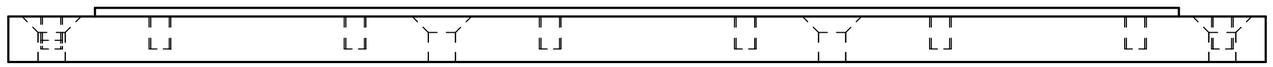

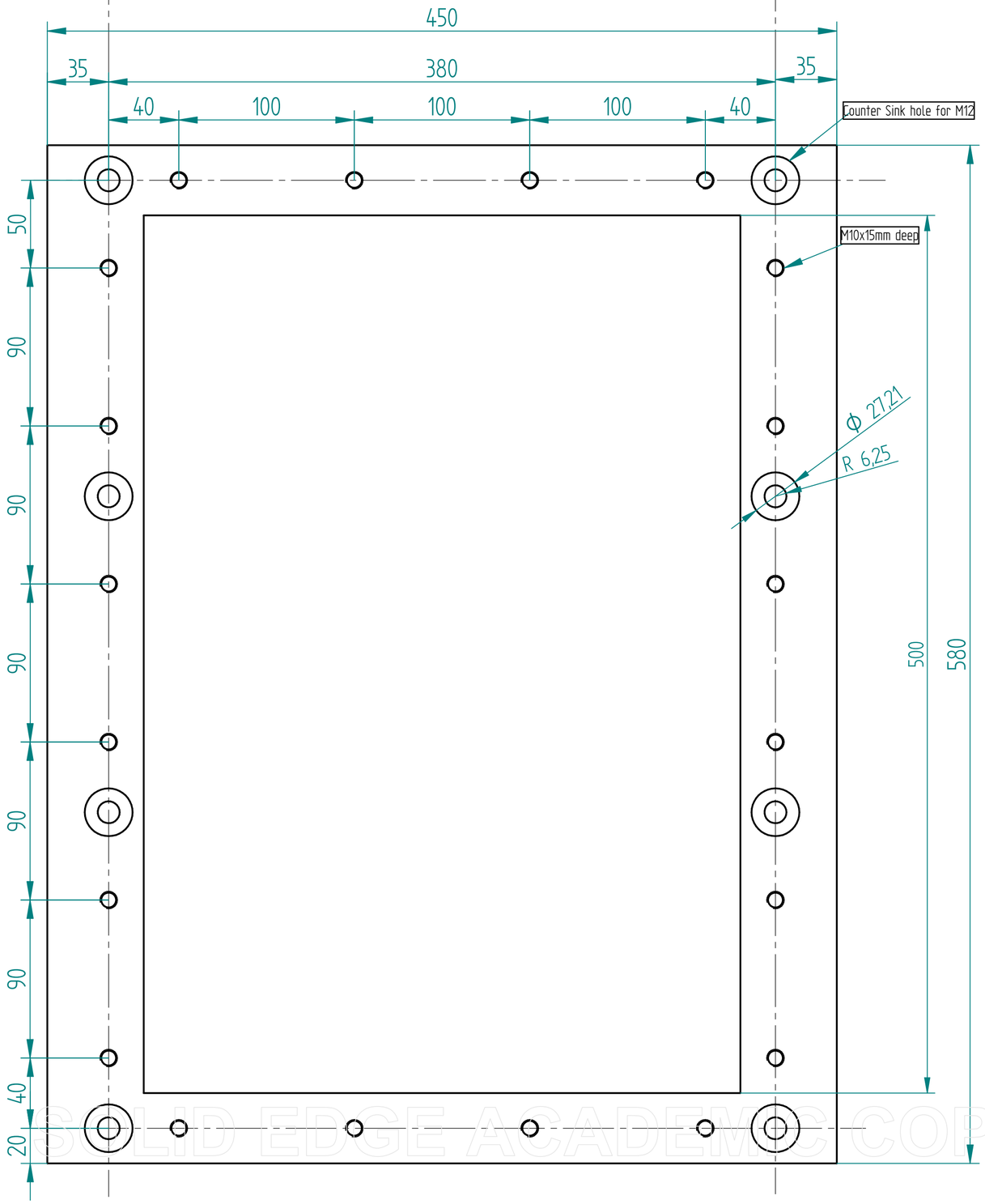

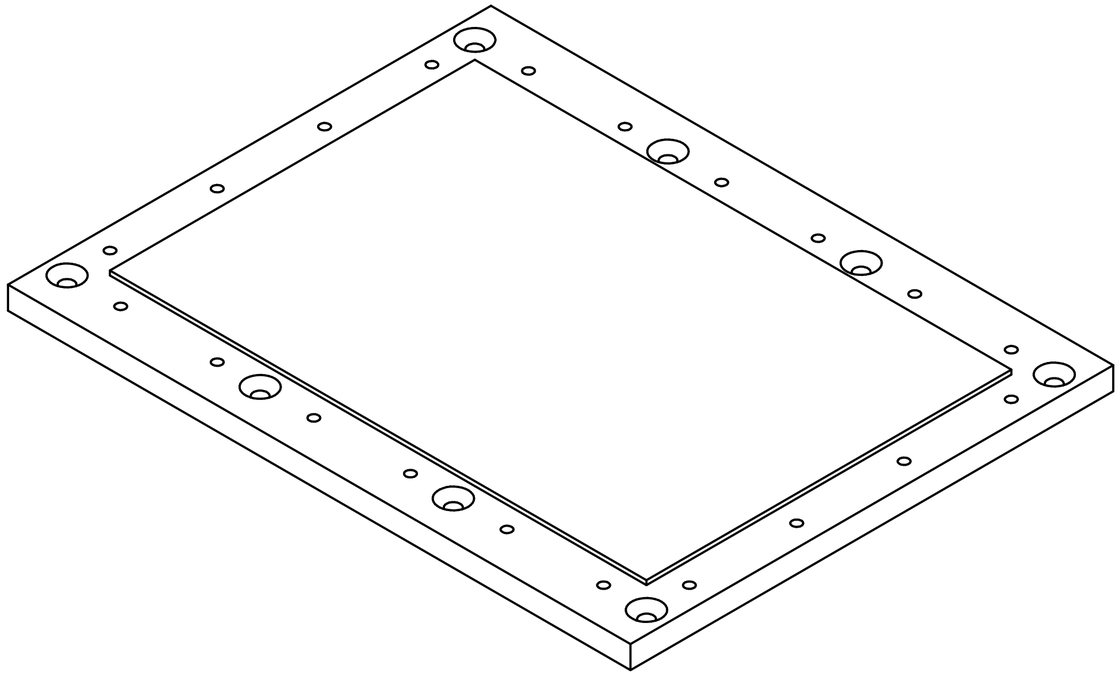

SOLID EDGE ACADEMIC COPY

	NAME	DATE
DRAWN	Raju P	03/07/2019
CHECKED		
ENG APPR		
MGR APPR		

UNLESS OTHERWISE SPECIFIED
DIMENSIONS ARE IN MILLIMETERS

Solid Edge

TITLE
Mould Bottom Plate

SIZE A2 | DWG NO Mould 1/1 | REV

FILE NAME: Part1 bottom plate.dft

SCALE: | WEIGHT: | SHEET 1 OF 1