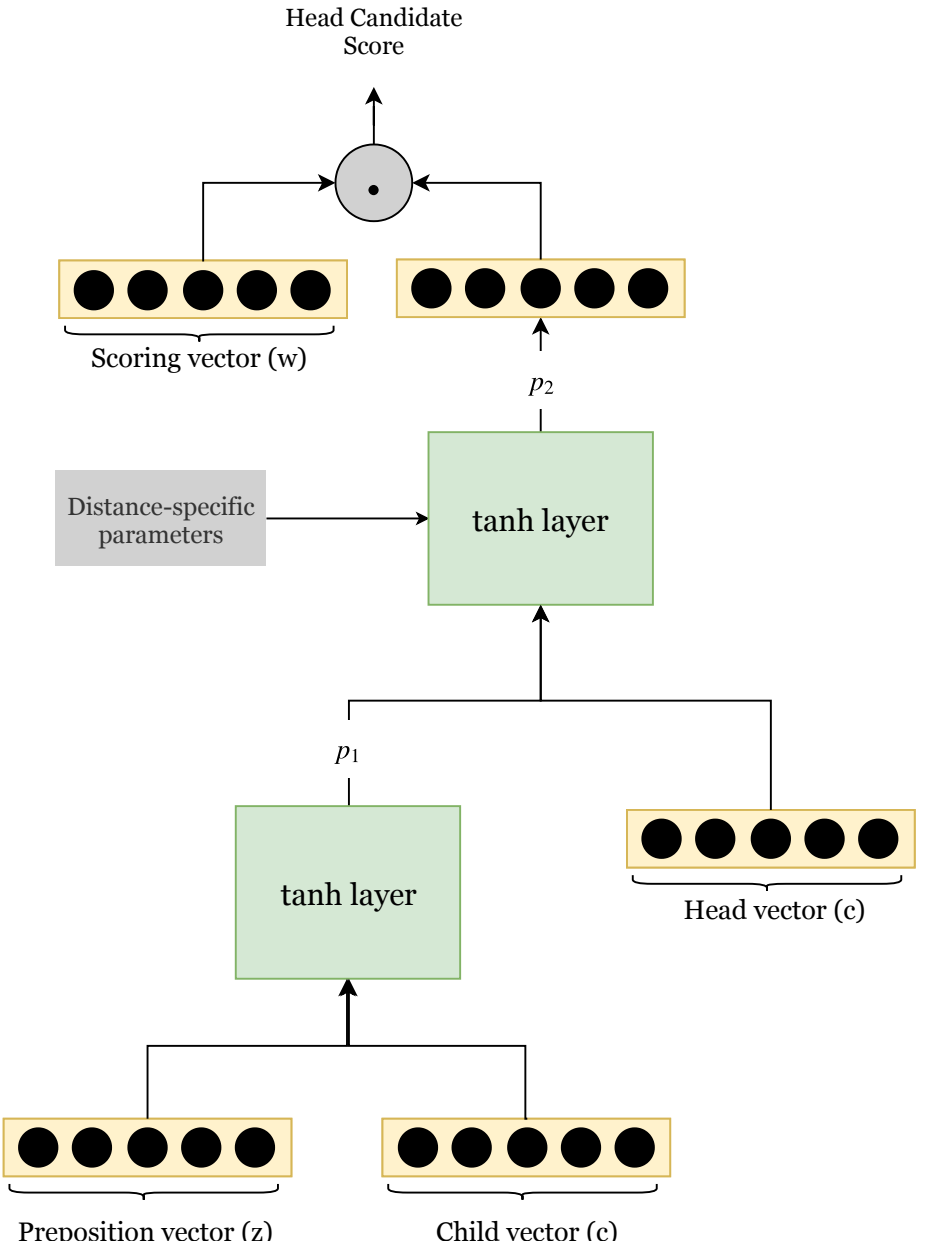
Head Candidate Score
Scoring vector (w)
p_2
Distance-specific parameters
tanh layer
p_1
tanh layer
Head vector (c)
Preposition vector (z)
Child vector (c)