On-Site Refueling Device Proposal

PI: Derek Zhang - Design Lead (dbz7@cornell.edu)
SME: Mason Peck - Professor of Astronautical Engineering at Cornell University (mp336@cornell.edu)
SME: Michael Niemack - Professor of Physics and Astronomy at Cornell University (niemack@cornell.edu)
SME: Matt Ulinski - Director of Master of Engineering at Cornell University (mu25@cornell.edu)
SME: Fabien Royer - Assistant Professor of Astronautical Engineering at Cornell University (fabienr@cornell.edu)
SME: Ziu Huang- Professor at Georgia Institute of Technology (zyuhuang@gatech.edu)

Mateo Rodriguez - Project Manager
David-Chuku Agwu - Deputy Project Manager
Avanthika Vuppala - Chief Scientist
David Torres - Co-Lead System Engineer
Matthew Hernandez - Co-Lead System Engineer
Luciene Oyola Rodriguez - Research Engineer

TX01.1.1

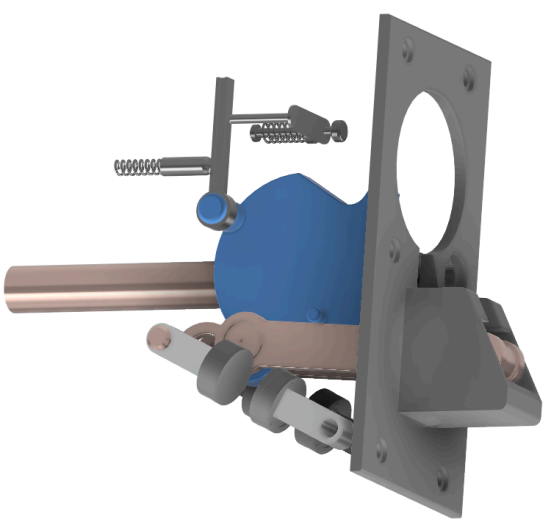

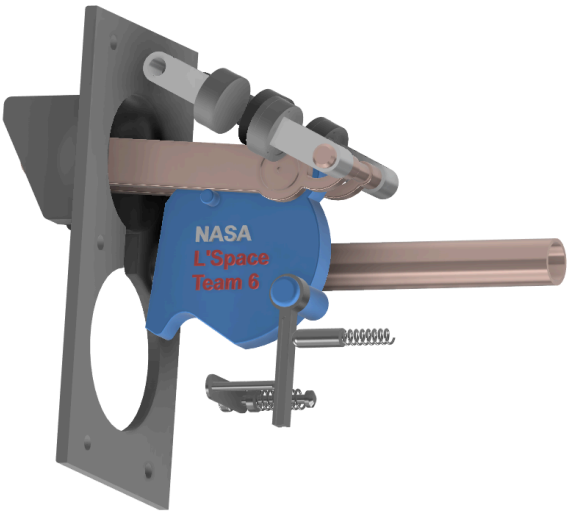

Abstract:
The On-Site Refueling Device project aims to develop a small-scale proof-of-concept for a Universal Magnetic Docking Interface (UMDI). With a projected 5-10% increase in refueling connection efficiency and 2-10 times more cycles it will supersede the current state of art berthing mechanisms for spacecraft docking and refueling. This project will demonstrate high-efficiency contactless fuel transfer on a laboratory scale using a magnetic coupling mechanism. This innovation will prove beneficial in the refueling process of key fuel depots in NASA's Artemis II&III, Mars missions and current developments like the Starship refueling operation.

Technology Merit and Work Plan:

See Appendix A for the Quad Chart summarizing the project's objectives, team members, and performance metrics. A visual concept diagram illustrating the mechanical layout of the magnetic docking interface is also included (Fig 1).

Current spacecraft refueling relies on heavy mechanical connectors with robotic systems and complex interfaces that add mass, reduce adaptability, and increase failure risk. The UMDI will serve as a modular, contactless solution, simplifying operations through magnetic coupling and enabling fluid transfer without mechanical latching. The prototype will include magnetic coupling plates, a fluid channel, sealing features, modular testing configurations, transparent components, and integrated sensors.

The state-of-the-art includes traditional fuel lines with mechanical couplings weighing 15 - 25 kg per connection (limited to specific propellant types); in robotic refueling missions, complex systems requiring precise positioning add an additional mass of 30-40 kg; experimental contactless systems, it is limited to laboratory demonstrations and it is unproven in relevant environments. These systems have complex mechanisms with numerous failure points that are costly. The UMDI in comparison is a simpler lightweight design that uses self-aligning magnets reducing failure points, wear and tear, and need for extreme precision. It’s also versatile with many propellants in operation and development. In terms of the technical challenges and risks we have the following:

- Optimizing Magnetic Field Strength and Stability:
  - Achieve a balance between strong coupling and easy detachment to facilitate seamless docking and undocking
  - Ensure the alignment of magnetic fields remains consistent across varying operational conditions

Developing a Reliable Fluid Transfer Line

- Designing a sealing barrier to prevent leakage in microgravity or in vacuum environments
- Ensuring fluid transfer efficiency while minimizing turbulent fluid flow on the boundary layer
- Managing energy consumption required for maintaining and modulating the magnetic field
- Developing a fluid transfer valve design that works with our universal docking interface
- Ensure compatibility with multiple fuel types and spaceflight refueling standards

Testing and Simulation Data

- Developing robust structural test environments that assess system performance
- Implementing computational fluid dynamics (CFD) models to refine designs before physical prototyping

Risk mitigation strategies include: interactive design testing, multiple magnetic configuration options and subject expert consultations whose areas of expertise are on fluid dynamics and magnetic field. Moreover, in terms of the performance metrics, they involve the following:

- Magnetic coupling strength: Sufficient to maintain connection during fluid transfer (quantified during testing)
- Leakage rate: less than 1% of transferred volume during laboratory testing
- Connection stability: maintain a stable connection during simulated movement
- Fluid transfer rate: establish baseline metrics for scaled system
- Reusability: more than 10 coupling cycles without degradation

Development includes Phase 1 (design and modeling, Months 1 - 2), Phase 2 (fabrication, Months 3 - 6), Phase 3

Challenges to infusion include scaling, adapting to space environments, fuel compatibility, and spacecraft integration. The project complements NASA's Robotic Refueling Mission and commercial technologies by focusing on the coupling system.

System Design Approach

To solve the complex challenge of safely and reliably refueling satellites in orbit, the team developed a mechanical-magnetic hybrid docking system that ensures passive alignment and secure locking during fluid transfer. The mechanical system is inspired by the proven robustness of railway train Willison/SA3 couplers. It incorporates a two-part Push-to-Lock & Magnetic mechanism designed to be both mechanically simple and providing safety redundancy in harsh space conditions. The design reduces the need for active motor control systems, allowing for more robust operation in autonomous or semi-autonomous refueling missions.

The docking interface consists of a rectangular protruding block and a matching socket on the opposing satellite body. As the satellites approach one another, the rectangular peg aligns itself into the receiving hole, ensuring translational and rotational alignment. Once the block is inserted, it physically interacts with a cantilever inside the housing, forcing it upward. This motion causes a rotational shift in the internal blue locking plate, securing the connection.

At this point, integrated neodymium magnets on both the male and female docking internals take over. These magnets assist in the final engagement, pulling the components together and ensuring a strong initial contact even with slight misalignment. The magnetic force also helps to reduce wear and fatigue on the mechanical components by minimizing impact during final lock engagement.

Fig. 1. Device open

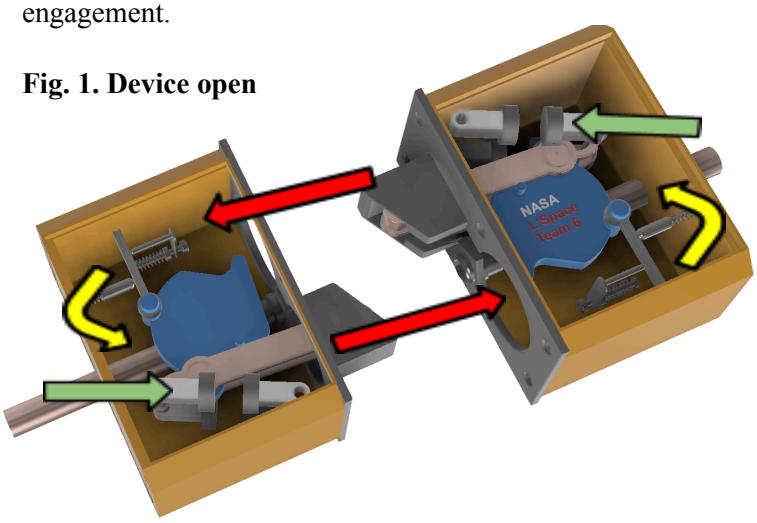

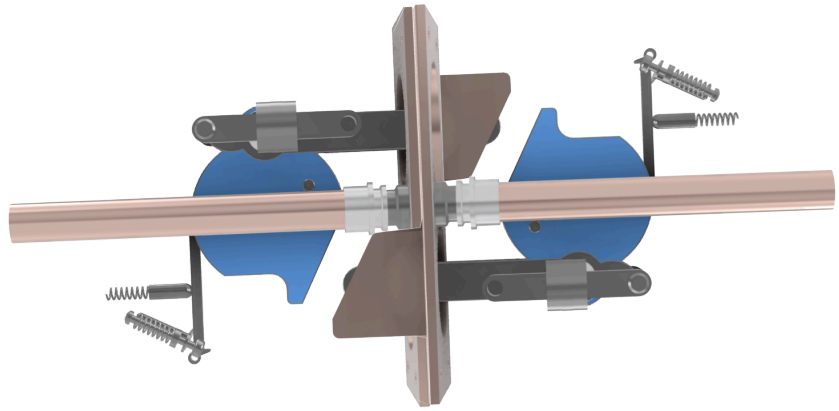

Fig. 2. Diagram of On-Site Refueling Device docking closed

Project Management Approach:

Deliverables include design documentation, a functional prototype, test data, and a final report. Budget totals $10,000, with $4,000 for materials, $2,000 for equipment rental, $1,500 for testing, $2,000 for stipends, and $500 for documentation. Resources include lab access, machining tools, 3D printing, CAD software, and fluid/magnetic testing setups. Skills needed are mechanical design, electromagnetics, CAD, fluid dynamics, lab testing, and data analysis. The project requires 1,200 labor hours: 300 for design, 200 for build, 300 for testing, 300 for analysis, and 100 for management. The core team contributes 900 hours, and student assistants and advisors contribute the remaining 300.

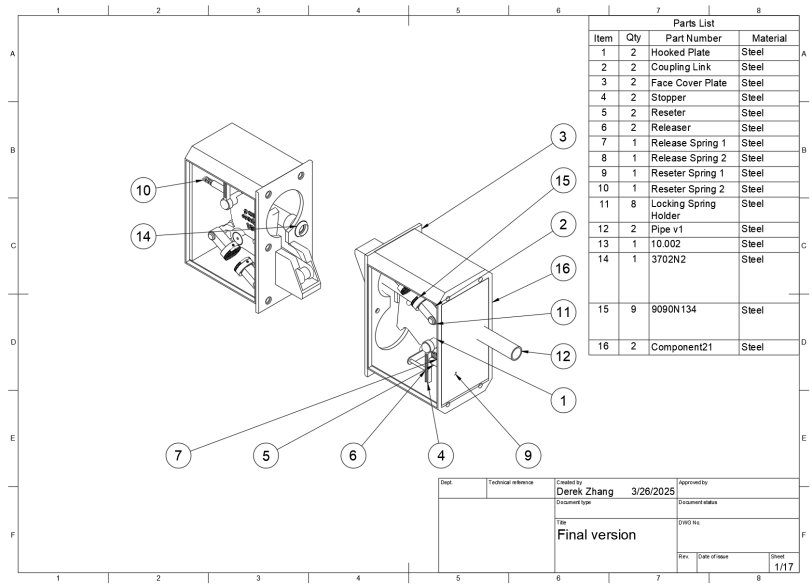

Fig. 3. Drawing sheet schematics of On-Site Refueling Device

Teaming and Workforce Development:

Derek Zhang leads design and CAD work and co-founded Cornell's Liquid Propulsion team. Mateo Rodriguez manages operations with leadership from student organizations. David-Chuku Agwu supports budgeting and logistics. Avanthika Vuppala contributes scientific planning with NASA MCA experience. David Torres and Matthew Hernandez specialize in systems and CAD engineering. Luciene Oyola Rodriguez supports research planning. Time commitments are 5 hours per week for Derek Zhang, Avanthika Vuppala, and Luciene Oyola Rodriguez; and 4 - 5 hours per week for Mateo Rodriguez, David-Chuku Agwu, David Torres, Matthew Hernandez. Undergraduate researchers will be mentored by core team members, supporting NASA workforce goals.

Refer to Appendix B for details on the NASA New Technology Report submission. A complete list of references is available in Appendix C.

Fig. 4. Cornell University Manufacturing facility

I'll

Appendix A - Quad Chart

On-Site Refueling Device

PI: Derek Zhang , Team #006

Goal / Objective

Project goal: Develop an on-site refueling device for vehicles, landers, and small spacecraft in space that is more efficient than the SOA.

Need for Innovation: Current propulsion systems are not sufficient enough to travel from earth to Mars so an overhaul of in-space refueling is necessary.

Funding: Within the $10,000 budget a functional prototype demonstrating the magnetic coupling and fluid transfer will be produced.

Technical Specifications

- Magnetic Coupling Strength: 50-100 N
- Maximum Flow Rate: 100-200 mL/min
- Operating Pressure: 2-5 bar
- Connection Success Rate: >95%
- Leak Rate: <0.1 mL/hour
- Power Requirement: <5W

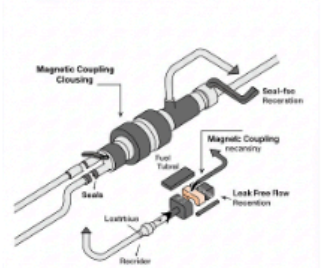

AI Generated Based off Description

Team Overview

Derek Zhang — Cornell University, Mechanical Engineering
Avanthika Vuppala — Rutgers University, Aerospace Engineering
Mateo Rodriguez — University of Rochester, Mechanical Engineering/Aerospace
Matthew Hernandez — UCF, Aerospace Engineering, OSTEM NASA Intern
Nicolas Jimenez — NC State, Mechanical Engineering
Luciene Oyola Rodriguez — Georgia Tech, Aerospace Engineering,
David Torres — UCF, Aerospace Engineering
David-Chuku Agwu — UNCW, Film/Cybersecurity, NASA NCAS alum

TX01.1.1

Metrics and Key Performance Parameters

Refueling Systems Comparison

Parameter	Proposed Magnetic System	Traditional Coupling	Quick-Disconnect
Connection Method	Contactless Magnetic	Mechanical Lock	Snap-fit Mechanism
Transfer Rate (mL/min)	100-200	500-1000	300-600
Operating Temp (°C)	-40 to +80	-20 to +80	-30 to +55
Connection Time (s)	< 5	30-60	15-30
Potential Failure Points	2-3	8-10	5-7
System Mass (kg)	0.5-1.0	2.0-3.0	1.5-2.0

Prototype Development Phases ($10k Budget):
1. Design & Simulation ($2,000): CAD modeling, magnetic field simulation, flow analysis
2. Component Fabrication ($4,000): 3D printing, magnets, seals, basic electronics
3. Testing Equipment ($3,000): Pressure sensors, flow meters, data acquisition
4. Validation & Documentation ($1,000): Performance testing, safety verification

Figure 1: Quad Chart

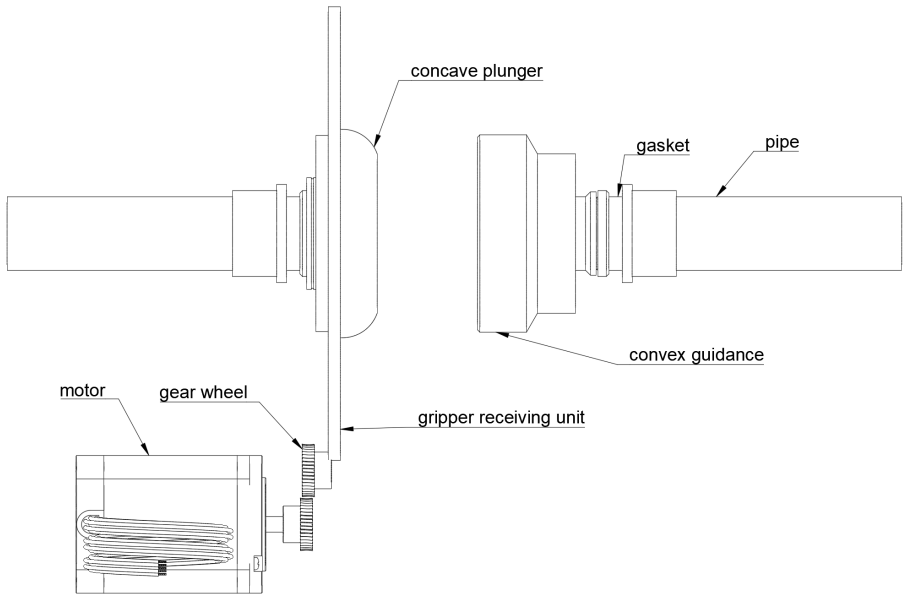

Figure 2: Early Concept Diagram

Appendix B - NASA NTR Form 1679

National Aeronautics and Space Administration	Disclosure of Invention and New Technology (Including Software)	Form Approved O.M.B. NO. 2700-0009	DATE 3/19/2025
		CONTRACTOR CASE NO.	

This is an important legal document. Carefully complete and forward to the Patent Representative (NASA in-house innovation) or New Technology Representative (contractor/grantee innovation) at NASA. Use of this report form by contractor/grantee is optional; however, an alternative format must at a minimum contain the information required herein. NASA in-house disclosures should be read, understood and signed by a technically competent witness in the witness signature block at the end of this form. In completing each section, use whatever detail deemed appropriate for a "full and complete disclosure." Contractors/Grantees please refer to the New Technology or Patent Rights – Retention by the Contractor clauses. When necessary, attach additional documentation to provide a full, detailed description.

NASA CASE NO. (OFFICIAL USE ONLY)

1. DESCRIPTIVE TITLE
On-Site Refueling Device

2. INNOVATOR(S) *(For each innovator provide: Name, Title, Work Address, Work Phone Number, and Work E-mail Address. If multiple innovators, number each to match Box 5.)*

Innovator #1:
Name: Derek Zang
Title: Principal Investigator
Work Address: 124 Hoy Rd, Ithaca, NY 14850
Work Phone Number: 516-450-0857
Work Email: dbz7@cornell.edu

Innovator #2:
Name: Mateo Rodriguez
Title: Project Manager
Work Address: 500 Joseph C. Wilson Blvd. Rochester, NY 14627
Work Phone Number: 602-535-6271
Work Email: mrodri61@u.rochester.edu

Innovator #3:
Name: Avanthika Vuppala
Title: Chief Scientist
Work Address: 3647 BPO WAY PISCATAWAY 08854
Work Phone Number: 347-949-8855
Work Email: av952@scarletmail.rutgers.edu

Innovator #4:
Name: Luciene Oyola Rodriguez
Title: Research Engineer
Work Address: 270 Ferst Dr, Atlanta, GA 30332
Work Phone Number: 7869164252
Work Email: lrodriguez99@gatech.edu

Innovator #5:
Name: David Torres
Title: Co-Lead Refueling Systems Engineer
Work Address: 4328 Scorpius St
Work Phone Number: 407-630-4888
Work Email: da106252@ucf.edu

Innovator #6:
Name: Matthew Hernandez
Title: Co-Lead Refueling Systems Engineer
Work Address:4328 Scorpius St
Work Phone Number: 954-736-6926
Work Email: ma040619@ucf.edu

Innovator #7:

Name: David-Chuku Agwu
Title: Deputy Project of Resources
Work Address: 8601 Reindeer Moss Dr
Work Phone Number: 919-492-6972
Work Email: dciagwu@gmail.com

Innovator #8:
Name: Nicolas Jimenez
Title: Mechanical Design Engineer
Work Address:
Work Phone Number: 984-439-9116
Work Email: nejimen2@ncsu.edu

3. INNOVATOR'S EMPLOYER WHEN INNOVATION WAS MADE *(For each innovator provide: Name, Division and Address of Employer, Organizational Code/Mail Code, and Contract/Grant Number if applicable. If multiple innovators, number each to match Box 5.)*

Innovator #1:
Name: Derek Zhang
Division: Sibley School of Mechanical and Aerospace Engineering
Address of Employer: 130 Upson Hall Cornell University Ithaca, New York 14853
Organizational Code/Mail Code: 14853-7501
Contract/Grant Number:: 80NSSC24M01860

Innovator #2:
Name: Mateo Rodriguez
Division: Hajim School of Engineering & Applied Sciences
Address of Employer: Hill Ct RdRochester, NY 14620
Organizational Code/Mail Code: 14627
Contract/Grant Number: 80NSSC24M01860

Innovator #3:
Name: Avanthika Vuppala
Division: School of Engineering
Address of Employer: 3647 BPO WAY PISCATAWAY 08854
Organizational Code/Mail Code: 14
Contract/Grant Number: 80NSSC24M01860

Innovator #4:
Name:Luciene Angele Oyola Rodriguez
Division: Daniel Guggenheim School of Aerospace Engineering
Address of Employer:270 Ferst Dr, Atlanta, GA 30332
Organizational Code/Mail Code: 30332-0001
Contract/Grant Number: 80NSSC24M01860

Innovator #5:
Name: David Torres
Division: College of Engineering and Computer Science
Address of Employer: 4328 Scorpius St
Organizational Code/Mail Code: 32816
Contract/Grant Number: 80NSSC24M01860

Innovator #6:
Name: Matthew Hernandez
Division: College of Engineering and Computer Science
Address of Employer: 4328 Scorpius St
Organizational Code/Mail Code: 32816
Contract/Grant Number: 80NSSC24M01860

Innovator #7:
Name: David-Chuku Agwu
Division: CHSSA and College of Science and Engineering
Address of Employer: 8601 Reindeer Moss Dr
Organizational Code/Mail Code: 27587
Contract/Grant Number: 80NSSC24M01860

Innovator #8:
Name: Nicolas Jimenez
Division: College of Engineering
Address of Employer: 915 Partners Way
Organizational Code/Mail Code:27695
Contract/Grant Number: 80NSSC24M01860

4. PLACE OF PERFORMANCE *(Address(es) where innovation made)*
NASA Marshall Space Center
Martin Rd SW, Huntsville, AL 35808

5. EMPLOYER STATUS *(choose one for each innovator)*

Innovator #1 CU	Innovator #2 CU
Innovator #3 CU	Innovator #4 CU
Innovator #5 CU	Innovator #6 CU
Innovator #7 CU	Innovator #8 CU

GE = Government
CU = College or University
NP = Non-Profit Organization
SB = Small Business Firm
LE = Large Entity

6. ORIGIN *(Check all that apply and provide all applicable numbers. If multiple Contracts/Grants, etc., list Contract/Grant Numbers in Box 3 with applicable employer information.)*

☐ NASA In-house Org. Mail Code _____ WBS _____
WBS _____
☑ Grant/Cooperative Agreement No. 80NSSC24M01860 WBS _____
☐Prime Contract No. _____
Task No. _____ Report No. _____ WBS _____
☐Subcontractor; Subcontract Tier _____
☐Joint Effort *(contractor, subcontractor and/or grantee contribution(s), and NASA in-house contribution)*
☐Multiple Effort *(multiple contractor, subcontractor and/or grantee contributions, no NASA in-house contribution)* WBS _____
☐Other (e.g., Space Act Agreement, MOA) No. _____

7. NASA CONTRACTING OFFICER'S TECHNICAL REPRESENTATIVE *(COTR)*
John Dankanich

8. CONTRACTOR/GRANTEE NEW TECHNOLOGY REPRESENTATIVE *(POC)*

9. BRIEF ABSTRACT *(A general description of the innovation which describes its capabilities, but does not reveal details that would enable duplication or imitation of the innovation.)*

The On-Site Refueling Device project aims to create a small scale-proof-of-concept for a Universal magnetic Docking Interface. It will eliminate traditional mechanical berthing mechanisms for spacecraft refueling. Moreover, it plans to demonstrate the possibility of contactless and effective fuel transfer on a laboratory scale which focuses on the magnetic coupling mechanisms and basic fluid capabilities.

SECTION I – DESCRIPTION OF THE PROBLEM OR OBJECTIVE THAT MOTIVATED THE INNOVATION'S DEVELOPMENT ***(Enter as appropriate: A. – General description of problem/objective; B. – Key or unique problem characteristics; C. – Prior art, i.e., prior techniques, methods, materials, or devices performing function of the innovation, or previous means for performing function of software; and D. – Disadvantages or limitation of prior art.)***

Modern spacecraft refueling systems with docking configuration, such as probe-droge or androgynous, rely on complicated mechanical attachments as well as complex fuel lines that increase failure possibility under the extreme circumstances of space. Inspired in part by aircraft air refueling systems, particularly the probe-and-drogue method used in military long service refueling, and household water plumbing fittings such as quick-connect couplings and threaded pipe joints, this concept aims to create a reliable, non-mechanical docking mechanism that enhances efficiency and reduces mission risk.

A. Complexity and Failure Risk: The reliance on mechanical latching mechanisms and intricate fuel transfer lines presents an increased risk of mechanical failure in space environments.
B. Mass and Launch Constraints: The added weight of traditional docking systems affects the payload capacity and increases launch costs.
C. Limited Cross-Compatibility: Different mission requirements and spacecraft designs demand adaptable refueling interfaces, which are currently limited by rigid docking system configurations.
D. High-Risk Coupling Operations: Physical contact-based docking systems require precise alignment and controlled engagement, introducing risks of structural damage or mission failure.

SECTION II – TECHNICALLY COMPLETE AND EASILY UNDERSTANDABLE DESCRIPTION OF INNOVATION DEVELOPED TO SOLVE THE PROBLEM OR MEET THE OBJECTIVE ***(Enter as appropriate; existing reports, if available, may form a part of the disclosure, and reference thereto can be made to complete this description: A. – Purpose and description of innovation/software; B. – Identification of component parts or steps, and explanation of mode of operation of innovation/software preferably referring to drawings, sketches, photographs, graphs, flow charts, and/or parts or ingredient lists illustrating the components; C. – Functional operation; D. – Alternate embodiments of the innovation/software; E. – Supportive theory; F. – Engineering specifications; G. – Peripheral equipment; and H. – Maintenance, reliability, safety factors.)***

A. The On-Site Refueling Device is designed to provide a Universal Magnetic Docking system for spacecraft refueling. It eliminates traditional mechanical docking mechanisms, replacing them with a contactless magnetic coupling. This system aims to improve on mitigating failure risks associated with intricate mechanical attachments and fuel line couplings. The innovation will enable modular fuel transfer solutions for various space applications, including satellite servicing.
B. Magnetic Docking Interface: Using magnetic fields to create a secure connection between docking spacecraft, making alignment and stability without physical latching.

Fluid Transfer System: Integrates fluid channels designed to control fuel transfer through the magnetic coupling.

Compatibility Mechanism: Cross compatibility with different spacecraft fuel systems by incorporating design principles.

Docking Control: Precision docking through guided magnetic attraction.

C. The docking process involves two spacecraft approaching each other, where the magnetic engages autonomously to create a seal. This eliminates the need for moving mechanical parts, making the system more reliable in extreme space conditions. Once coupled, the fluid transfer system initiates fuel flow, minimal leakage and efficient refueling.
D. Alternate: Electromagnetic-Assisted Docking: Adding electromagnetic fields for dynamic attraction and repulsion to improve docking accuracy.

G. Control Sensors/Guidance: Automated Alignment and Approach Monitoring. Data Transmission System: Refueling Diagnostics and Monitoring. Mission Specific Adapters:

to support various spacecraft objects.

H. The magnetic Docking System is designed for minimal maintenance due to absence of moving mechanical parts; reducing wear and tear. The system is safer than traditional methods as it eliminates potential fuel leakage associated with mechanical coupling.

SECTION III – UNIQUE OR NOVEL FEATURES OF THE INNOVATION AND THE RESULTS OR BENEFITS OF ITS APPLICATION ***(Enter as appropriate: A. – Novel or unique features; B. – Advantages of innovation/software; C. – Development or new conceptual problems; D. – Test data and source of error; E. – Analysis of capabilities; and F. – For software, any re-use or re-engineering of existing code, use of shareware, or use of code owned by a non-federal entity.)***

A. An adaptable magnetic docking system for spacecraft refueling, for liquid propellant, based on magnetic coupling.
B. The advantages involve: independence of mechanical attachments and fuel line couplings, less mass during launch of spacecraft, increased life-time of spacecraft in LEO, allows for more mass to be focused on payload (do not know how to phrase this in a better way) , increase Reliability, reducing Wear and Failure Risks, and safety due to contactless docking.
C. Traditional Docking Systems need to focus on accurate mechanical alignment, which is difficult. This innovation fixes that problem with a magnetic docking mechanism that self aligns and adjusts based on the electromagnetic interactions. Designing a fuel transfer system without mechanical connections has challenges in pressure and fluid dynamics.
D. Test Data : Magnetic Coupling Strength, making sure the docking force can withstand the connection. Fluid Transfer, testing leak proof transfer rates across different fuels and flow conditions. Source of Error: Electromagnetic Force Optimization: Adjusting Field Strength to minimize interference.
E. Consistent Docking Accuracy across multiple tests. Efficient Low-Fuel Transfer.
F. The System builds upon electromagnetic docking concepts, with fluid transfer capabilities. Prior systems that relied solely on mechanical coupling, this innovation eliminates moving parts.

SECTION IV – SPECULATION REGARDING POTENTIAL COMMERCIAL APPLICATIONS AND POINTS OF CONTACT (***Including names of companies producing or using similar products.)***

Satellite Servicing and Refueling:
Extends the operational lifespan of satellites by enabling modular refueling interfaces, making it easier to establish in-orbit fuel depots that support deep-space missions. Companies like Northrop Grumman (Mission Extension Vehicle), Raytheon, and Boeing (Starliner & X-37B) could integrate this technology without the need of intricate mechanical couplings into their spacecraft servicing operations, reducing satellite decommissioning costs. Astroscale, Intelsat, Orbitfab are producing similar interfaces. Maxar Technologies is developing robotic drogue servicing and refueling systems that could be enhanced with our universal magnetic docking approach.

Orbital infrastructure:
SmallSats & CubeSats, Astrobotic Technology , Varda, Boeing (Orbital Reef's fuel resupply) could benefit from an adaptable, affordable fueling interface, allowing for efficient in-orbit fuel depots and resupply missions.

Lunar and Martian Surface Operations
NASA's Artemis program and ISRO's lunar lander initiatives rely on reliable refueling methods for sustained surface operations. The Universal Magnetic Docking Interface could enable seamless in-situ refueling for lunar and Martian landers, utilizing locally sourced fuel such as liquid oxygen and methane, reducing reliance on Earth-based resupply missions.

10. ADDITIONAL DOCUMENTATION *(Include copies or list below any pertinent documentation which aids in the understanding or application of the innovation (e.g., articles, contractor reports, engineering specs, assembly/manufacturing drawings, parts or ingredients list, operating manuals, test data, assembly/manufacturing procedures, etc.).)*

TITLE	PAGE	DATE
- Design and Analysis of Novel Floating Docking Mechanism for On-Orbit Refueling 2-5	7/7/22	
- Design and Analysis of a New Deployable Docking Mechanism for Microsatellites 11-18	18/10/2022	
- NASA Docking System Block 1: NASA's New Direct Electric Docking System Supporting ISS 2- 8	18/5/2018	
and Future Human Space Exploration		
- Magnet-Based System for Docking of CubeSats 13	03/2007	
- Technologies for Refueling Spacecraft On-Orbit 2-6	11/2000	
- Liquid inflow to initially empty, hemispherical ended cylinders during weightlessness 7-9	06/1968	

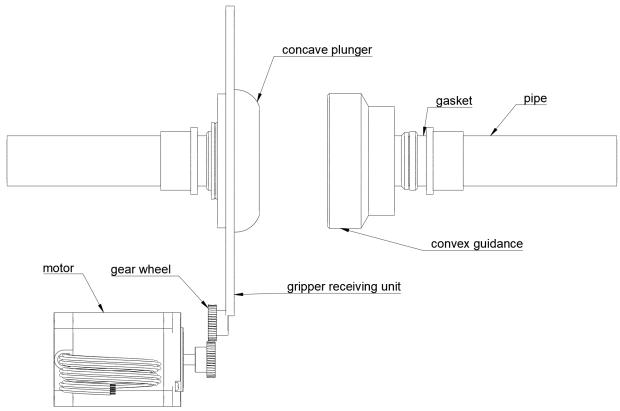

Appendix C - Bibliography

B., L. (2007). Magnet-Based System for Docking of Miniature Spacecraft. Mechanics/Machinery, 13-14.

Chato, D. J. (2000). Technologies for Refueling Spacecraft On-Orbit. Cleveland: NASA.

McFatter, J., Keiser, K., & Rupp, T. (2018). NASA Docking System Block 1: NASA's New Direct Electric Docking System Supporting ISS and Future Human Space Exploration.

P. Symons, E., C. Nussle, R., & L. Abdalla, K. (1968). LIQUID INFLOW TO INITIALLY EMPTY, HEMISPHERICAL ENDED CYLINDERS DURING WEIGHTLESSNESS. Cleveland: NASA.

Sun, Z., Li, S., Zhang, H., Lei, H., & Song, X. (2022). Design and Analysis of a Novel Floating Docking Mechanism for On-Orbit Refueling. aerospace, 2-5.

Zhao, Y., Yang , T., Yue, H., Yang, X., Bai, D., & Yang, F. (2022). Design and Analysis of a New Deployable Docking Mechanism for Microsatellites. Remote Sensing, 11-18.