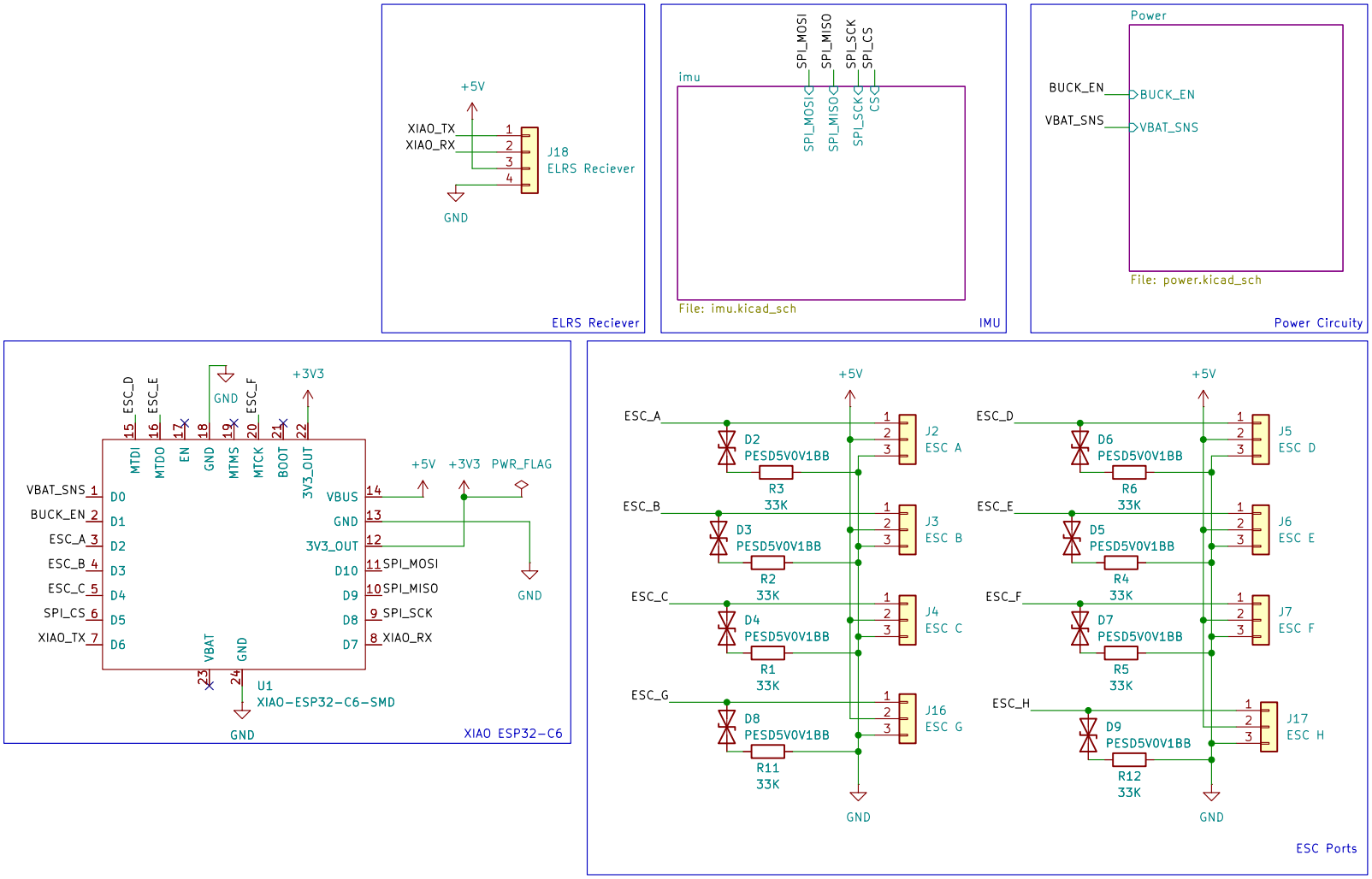

avycado13

Sheet: /

File: BeetleBoard.kicad_sch

Title: BeetleBoard

Size: A4	Date:	**Rev:**
KiCad E.D.A. 10.0.4		Id: 1/3

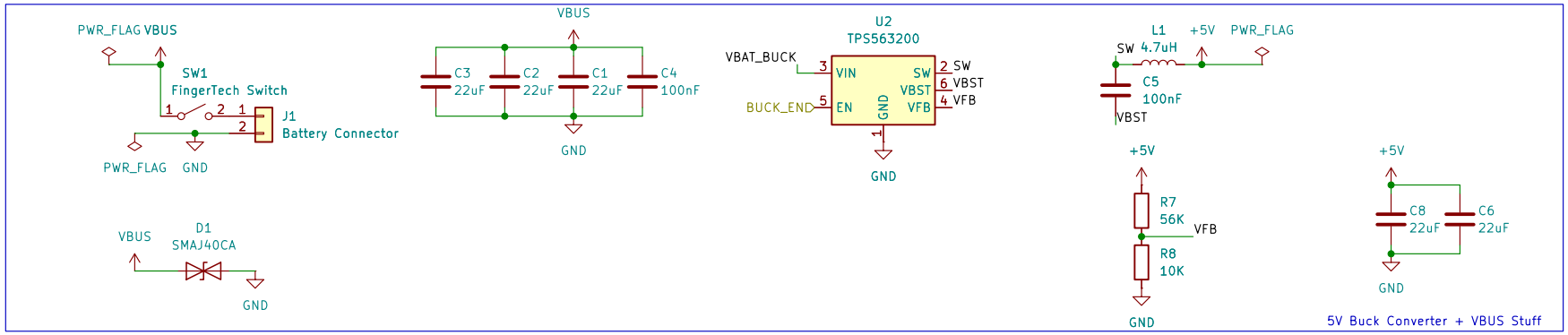

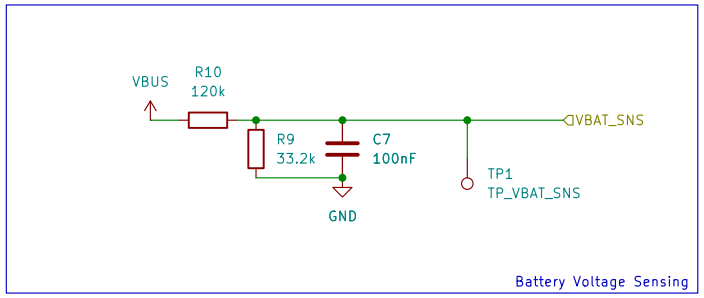

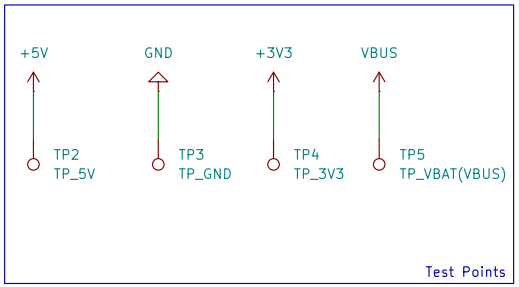

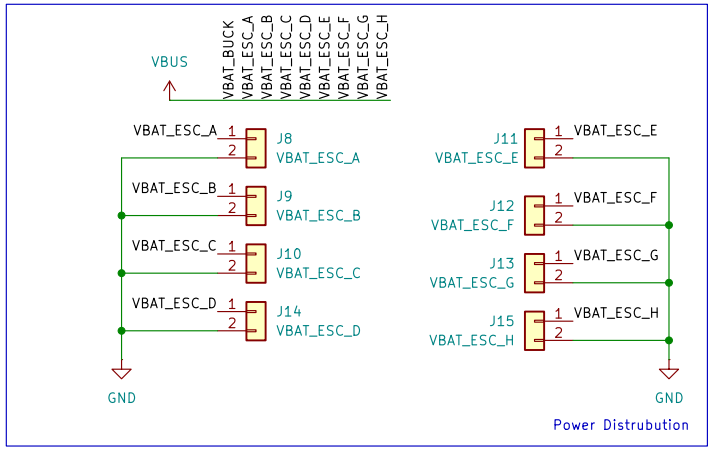

Sheet: /Power/
File: power.kicad_sch

Title: BeetleBoard Power

Size: A4	Date:	Rev:
KiCad E.D.A. 10.0.4		Id: 2/3

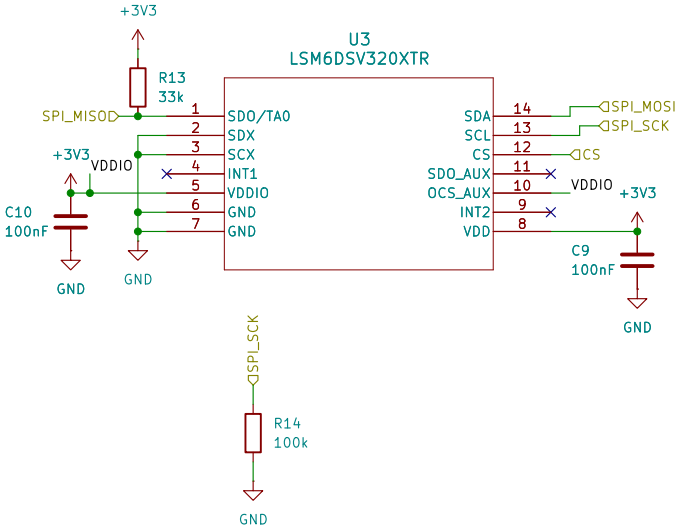

Sheet: /imu/
File: imu.kicad_sch

Title:

Size: A5	Date:	**Rev:**
KiCad E.D.A. 10.0.4		Id: 3/3