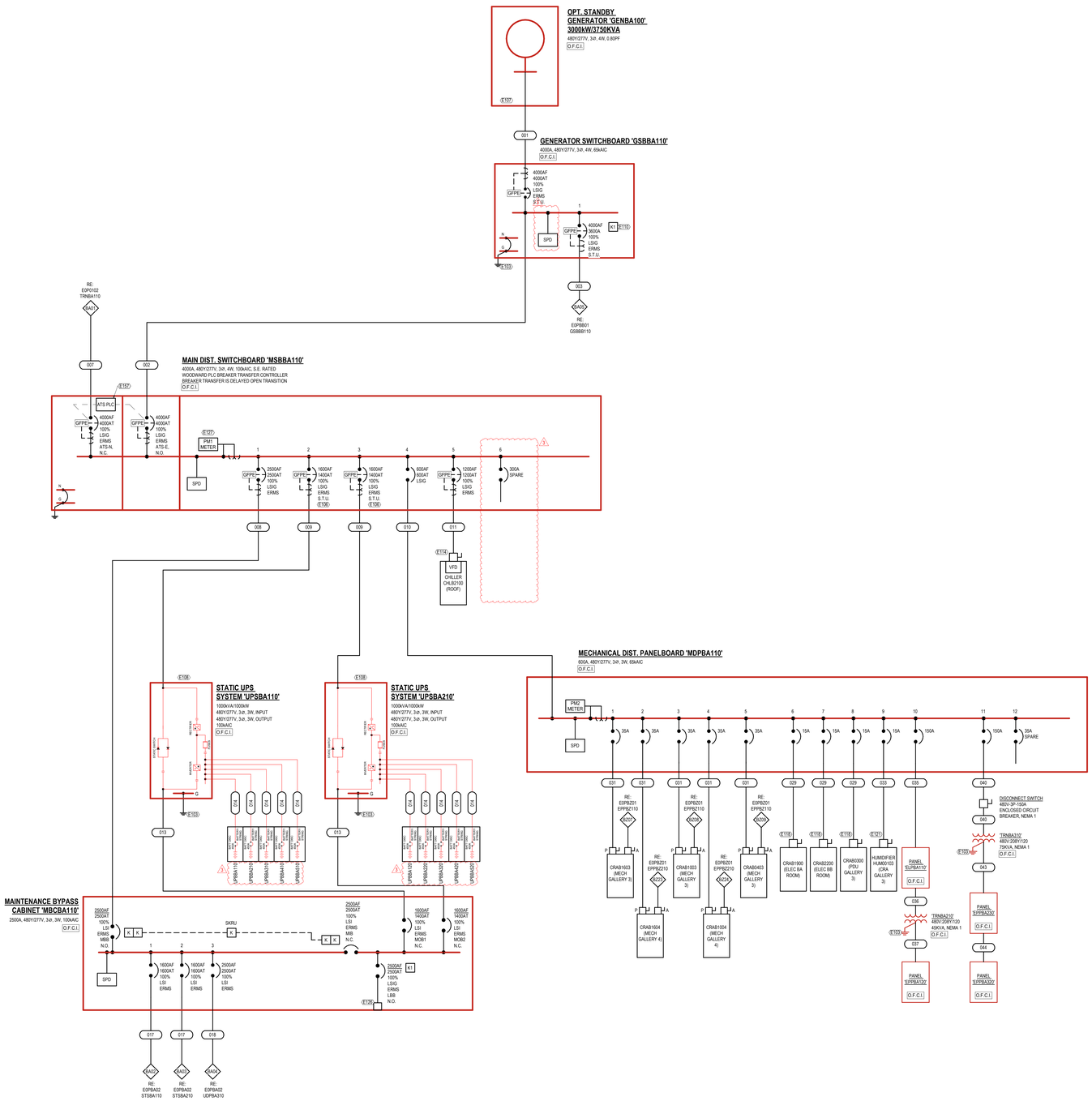

1 **ELECTRICAL PARTIAL ONE-LINE DIAGRAM - PP2B - BLOCK A**
SCALE: NOT TO SCALE

ONE-LINE GENERAL NOTES:

1. REFER TO GENERAL ELECTRICAL NOTES, SYMBOLS, AND ABBREVIATIONS SHEET E000001 FOR ALL SYMBOLS ON THIS SHEET.
2. REFER TO BOOK SPECS FOR ELECTRICAL SPECIFICATIONS.
3. REFER TO E600000 SERIES SHEETS FOR FEEDER SCHEDULES, LOAD ANALYSES, AND FAULT CURRENT SCHEDULES.
4. PHASE ROTATION SHALL BE A-B-C CLOCKWISE THROUGHOUT SYSTEM.
5. POWER QUALITY METER "PM1" INDICATES SCHNEIDER ELECTRIC PM8000 SERIES. POWER QUALITY METER "PM2" INDICATES SCHNEIDER ELECTRIC PM6000 SERIES.

LINETYPE LEGEND

NEW EQUIPMENT/FEEDERS
FUTURE EQUIPMENT/FEEDERS
EQUIPMENT/FEEDERS BY OTHERS

3 DIGIT ASSET CODE:
PDU - POWER DISTRIBUTION UNIT
EPM - ELECTRIC POWER MODULE
MSB - MAIN SWITCH BOARD
GEN - GENERATOR
MDP - MECHANICAL DISTRIBUTION PANEL
TRN - TRANSFORMER
LCP - LIGHTING CONTROL PANEL
RPP - REMOTE POWER PANEL

PDUBD111
- SYSTEMS SIDE: ALPHA CODE A-Z
- UPSTREAM EQUIPMENT IDENTIFIER
- DATA HALL DESIGNATION
- EQUIPMENT COUNT
- ELECTRICALLY CONNECTED SYSTEM: ALPHA CODE A-Z

EDGECONNEX NATIONAL ASSET IDENTIFICATION SYSTEM

KEYED NOTES:

E103	REFER TO GROUNDING ONE-LINE DIAGRAMS SHEET SERIES E0EXXXX FOR ADDITIONAL INFORMATION.
E106	PROVIDE 120V CONNECTION FROM UPS TO SHUNT-TRIP BREAKER.
E107	PROVIDE GENERATOR START CONTROL WIRING PER DETAIL 1E500004.
E108	PROVIDE UPS INTERCONNECT CONTROL WIRING PER DETAIL 1E500004.
E110	GENERATOR AND MAINTENANCE BYPASS CABINET LOAD BANK BREAKER KIRK KEYS FURNISHED WITH GEAR. KIRK KEYS SHALL BE INSTALLED SO ONLY ONE GENERATOR OR MAINTENANCE BYPASS CABINET LOAD BANK BREAKER CAN BE CLOSED AT A SINGLE TIME.
E114	DISCONNECT AND VFD PROVIDED WITH EQUIPMENT BY MANUFACTURER.
E118	DISCONNECT PROVIDED WITH EQUIPMENT BY MANUFACTURER.
E121	480V/30A FUSED AT 25AIN1
E126	LOAD BANK CAM LOCK CONNECTIONS PROVIDED WITH SWITCHGEAR AND FACTORY WIRED BY MANUFACTURER.
E127	PROVIDE 24V CONNECTION TO METER FROM BMP PANEL. PROVDE CABLING AND CONDUIT AS REQUIRED.
E157	PROVIDE PLC INTERLOCK CABLING BETWEEN BREAKER TRANSFER PAIRS AS REQUIRED. PROVIDE 24V CONNECTION TO PLC CONTROLLER FROM BMP PANEL LOCATED IN UPS ELECTRICAL ROOM. PROVIDE CABLING AND CONDUIT AS REQUIRED.

BCEI BURR COMPUTER ENVIRONMENTS, INC.
MEP ENGINEERS
10400 RODGERS ROAD | HOUSTON, TX 77070
281.374.8644

Gensler
CONSULTING ARCHITECTS
999 PEACHTREE ST NE | SUITE 1400 | ATLANTA, GA 30309
404.507.1000

Kimley»Horn
CONSULTING STRUCTURAL ENGINEERS
11720 AMBER PARK DRIVE | SUITE 600 | ALPHARETTA, GA 30009
770.619.7280

Kimley»Horn
CONSULTING CIVIL ENGINEERS
1200 PEACHTREE ST NE | SUITE 800 | ATLANTA, GA 30309
404.419.8700

edgeconnex®
ATL11
ADDRESS
4850 STONEWALL TELL RD
UNION CITY, GA 30349

ISSUES & REVISIONS

NO	DATE	DESCRIPTION
1	06.21.2024	ISSUE FOR PERMIT
2	07.24.2024	CITY COMMENTS
3	09.06.2024	ADDENDUM 01

SEAL
Mo.PE051907 PROFESSIONAL ENGINEER
9-6-24
Exp: 12-31-24

ELECTRICAL ONE-LINE DIAGRAM - PP2B - BLOCK A

DRAWN: LJS
REVIEWED: DGC
PROJECT NO: C2370

SHEET NO.
E0PBA01

PROPRIETARY: NOT FOR DISCLOSURE OR USE WITHOUT THE WRITTEN CONSENT OF BURR COMPUTER ENVIRONMENTS, INC.

© BURR COMPUTER ENVIRONMENTS, INC.
9/6/2024 9:23:51 AM
Autodesk Docs://2370-EDGAT1/1102370-EDGAT1/1102370-EDGAT1-L1-07_2MW-ELEC-OTHER_R23.rvt

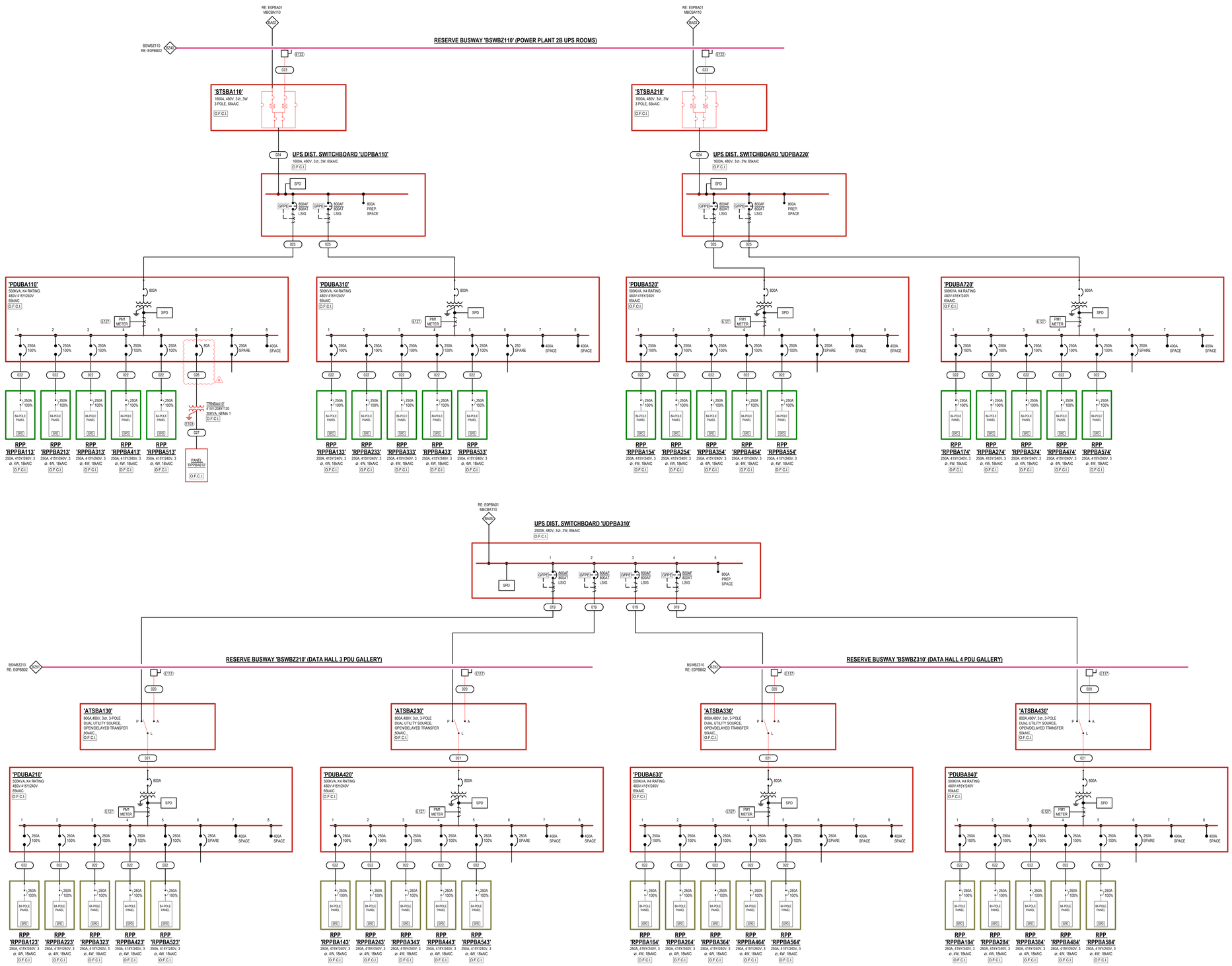

1 ELECTRICAL PARTIAL ONE-LINE DIAGRAM - PP2B - BLOCK A

SCALE: NOT TO SCALE

ONE-LINE GENERAL NOTES:

1. REFER TO GENERAL ELECTRICAL NOTES, SYMBOLS, AND ABBREVIATIONS SHEET E000001 FOR ALL SYMBOLS ON THIS SHEET.
2. REFER TO BOOK SPECS FOR ELECTRICAL SPECIFICATIONS.
3. REFER TO E600000 SERIES SHEETS FOR FEEDER SCHEDULES, LOAD ANALYSES, AND FAULT CURRENT SCHEDULES.
4. PHASE ROTATION SHALL BE A-B-C CLOCKWISE THROUGHOUT SYSTEM.
5. POWER QUALITY METER "PM1" INDICATES SCHNEIDER ELECTRIC PM8000 SERIES. POWER QUALITY METER "PM2" INDICATES SCHNEIDER ELECTRIC PM6000 SERIES.

LINETYPE LEGEND

NEW EQUIPMENT/FEEDERS
FUTURE EQUIPMENT/FEEDERS
EQUIPMENT/FEEDERS BY OTHERS

EDGECONNEX NATIONAL ASSET IDENTIFICATION SYSTEM

PDUBD111

- 3 DIGIT ASSET CODE:
  - PDU - POWER DISTRIBUTION UNIT
  - EPM - ELECTRIC POWER MODULE
  - MSB - MAIN SWITCH BOARD
  - GEN - GENERATOR
  - MDP - MECHANICAL DISTRIBUTION PANEL
  - TRN - TRANSFORMER
  - LCP - LIGHTING CONTROL PANEL
  - RPP - REMOTE POWER PANEL
- SYSTEMS SIDE: ALPHA CODE A-Z
- UPSTREAM EQUIPMENT IDENTIFIER
- DATA HALL DESIGNATION
- EQUIPMENT COUNT
- ELECTRICALLY CONNECTED SYSTEM: ALPHA CODE A-Z

KEYED NOTES:

E103	REFER TO GROUNDING ONE-LINE DIAGRAMS SHEET SERIES E0EXXXX FOR ADDITIONAL INFORMATION.
E117	PROVIDE BUSWAY TAP SAME MANUFACTURER AS BUSWAY. TAP SHALL INCLUDE 800A/3P BREAKER AND MATCH BUSWAY AIC RATING.
E122	PROVIDE BUSWAY TAP BY SAME MANUFACTURER AS BUSWAY. TAP SHALL INCLUDE 1600A/3P BREAKER.
E127	PROVIDE 24V CONNECTION TO METER FROM BMP PANEL. PROVIDE CABLING AND CONDUIT AS REQUIRED.

BCEI
BURR COMPUTER ENVIRONMENTS, INC.
MEP ENGINEERS
10400 RODGERS ROAD | HOUSTON, TX 77070
281.374.8644

Gensler
CONSULTING ARCHITECTS
999 PEACHTREE ST NE | SUITE 1400 | ATLANTA, GA 30309
404.507.1000

Kimley»Horn
CONSULTING STRUCTURAL ENGINEERS
11720 AMBER PARK DRIVE | SUITE 600 | ALPHARETTA, GA 30009
770.619.7280

Kimley»Horn
CONSULTING CIVIL ENGINEERS
1200 PEACHTREE ST NE | SUITE 800 | ATLANTA, GA 30309
404.419.8700

edgeconnex®
ATL11
ADDRESS
4850 STONEWALL TELL RD
UNION CITY, GA 30349

ISSUES & REVISIONS

NO	DATE	DESCRIPTION
1	06.21.2024	ISSUE FOR PERMIT
2	07.24.2024	CITY COMMENTS
3	09.06.2024	ADDENDUM 01
4	01.21.2025	ADDENDUM 02

SEAL

No.PE031977 PROFESSIONAL ENGINEER DOUGLAS G. CRAGER
1-21-25
Exp.: 12-31-25

ELECTRICAL ONE-LINE DIAGRAM - PP2B - BLOCK A

DRAWN: LJS
REVIEWED: DGC
PROJECT NO: C2370

SHEET NO.
E0PBA02

PROPRIETARY: NOT FOR DISCLOSURE OR USE WITHOUT THE WRITTEN CONSENT OF BURR COMPUTER ENVIRONMENTS, INC.

© BURR COMPUTER ENVIRONMENTS, INC.
1/30/2025 6:28:08 PM
Autodesk Docs://C2370 EDGA ATL11/C2370 EDGA ATL11 ATL1-AT_2MW ELEC-OTHER_R23.rvt

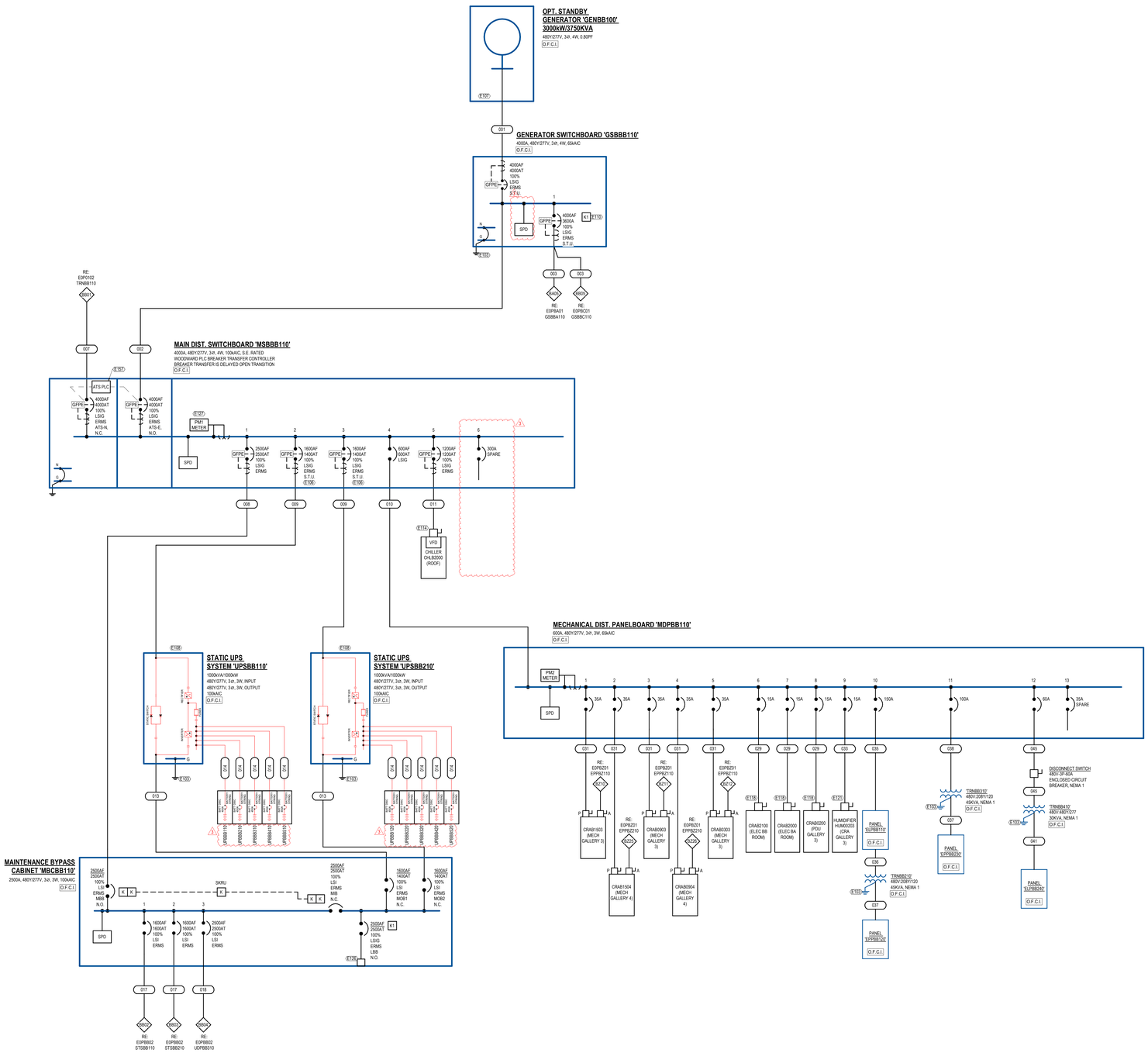

1 **ELECTRICAL PARTIAL ONE-LINE DIAGRAM - PP2B - BLOCK B**
SCALE: NOT TO SCALE

ONE-LINE GENERAL NOTES:

1. REFER TO GENERAL ELECTRICAL NOTES, SYMBOLS, AND ABBREVIATIONS SHEET E000001 FOR ALL SYMBOLS ON THIS SHEET.
2. REFER TO BOOK SPECS FOR ELECTRICAL SPECIFICATIONS.
3. REFER TO E600000 SERIES SHEETS FOR FEEDER SCHEDULES, LOAD ANALYSES, AND FAULT CURRENT SCHEDULES.
4. PHASE ROTATION SHALL BE A-B-C CLOCKWISE THROUGHOUT SYSTEM.
5. POWER QUALITY METER "PM1" INDICATES SCHNEIDER ELECTRIC PM8000 SERIES. POWER QUALITY METER "PM2" INDICATES SCHNEIDER ELECTRIC PM6000 SERIES.

LINETYPE LEGEND

NEW EQUIPMENT/FEEDERS
FUTURE EQUIPMENT/FEEDERS
EQUIPMENT/FEEDERS BY OTHERS

3 DIGIT ASSET CODE:
PDU - POWER DISTRIBUTION UNIT
EPM - ELECTRIC POWER MODULE
MSB - MAIN SWITCH BOARD
GEN - GENERATOR
MDP - MECHANICAL DISTRIBUTION PANEL
TRN - TRANSFORMER
LCP - LIGHTING CONTROL PANEL
RPP - REMOTE POWER PANEL

PDUBD111
- SYSTEMS SIDE: ALPHA CODE A-Z
- UPSTREAM EQUIPMENT IDENTIFIER
- DATA HALL DESIGNATION
- EQUIPMENT COUNT
- ELECTRICALLY CONNECTED SYSTEM: ALPHA CODE A-Z

EDGECONNEX NATIONAL ASSET IDENTIFICATION SYSTEM

KEYED NOTES:

E103	REFER TO GROUNDING ONE-LINE DIAGRAMS SHEET SERIES E0EXXXX FOR ADDITIONAL INFORMATION.
E106	PROVIDE 120V CONNECTION FROM UPS TO SHUNT-TRIP BREAKER.
E107	PROVIDE GENERATOR START CONTROL WIRING PER DETAIL 1E500004.
E108	PROVIDE UPS INTERCONNECT CONTROL WIRING PER DETAIL 1E500004.
E110	GENERATOR AND MAINTENANCE BYPASS CABINET LOAD BANK BREAKER KIRK KEYS FURNISHED WITH GEAR. KIRK KEYS SHALL BE INSTALLED SO ONLY ONE GENERATOR OR MAINTENANCE BYPASS CABINET LOAD BANK BREAKER CAN BE CLOSED AT A SINGLE TIME.
E114	DISCONNECT AND VFD PROVIDED WITH EQUIPMENT BY MANUFACTURER.
E118	DISCONNECT PROVIDED WITH EQUIPMENT BY MANUFACTURER.
E121	480V/30A FUSED AT 25AIN1
E126	LOAD BANK CAM LOCK CONNECTIONS PROVIDED WITH SWITCHGEAR AND FACTORY WIRED BY MANUFACTURER.
E127	PROVIDE 24V CONNECTION TO METER FROM BMP PANEL. PROVDE CABLING AND CONDUIT AS REQUIRED.
E157	PROVIDE PLC INTERLOCK CABLING BETWEEN BREAKER TRANSFER PAIRS AS REQUIRED. PROVIDE 24V CONNECTION TO PLC CONTROLLER FROM BMP PANEL LOCATED IN UPS ELECTRICAL ROOM. PROVIDE CABLING AND CONDUIT AS REQUIRED.

BCEI BURR COMPUTER ENVIRONMENTS, INC.
MEP ENGINEERS
10400 RODGERS ROAD | HOUSTON, TX 77070
281.374.8644

Gensler
CONSULTING ARCHITECTS
999 PEACHTREE ST NE | SUITE 1400 | ATLANTA, GA 30309
404.507.1000

Kimley»Horn
CONSULTING STRUCTURAL ENGINEERS
11720 AMBER PARK DRIVE | SUITE 600 | ALPHARETTA, GA 30009
770.619.7280

Kimley»Horn
CONSULTING CIVIL ENGINEERS
1200 PEACHTREE ST NE | SUITE 800 | ATLANTA, GA 30309
404.419.8700

edgeconnex®
ATL11
ADDRESS
4850 STONEWALL TELL RD
UNION CITY, GA 30349

ISSUES & REVISIONS

NO	DATE	DESCRIPTION
1	06.21.2024	ISSUE FOR PERMIT
2	07.24.2024	CITY COMMENTS
3	09.06.2024	ADDENDUM 01

SEAL
Mo.PE031907 PROFESSIONAL ENGINEER DOUG ASG CARGER
9-6-24
Exp: 12-31-24

ELECTRICAL ONE-LINE DIAGRAM - PP2B - BLOCK B

DRAWN: LJS
REVIEWED: DGC
PROJECT NO: C2370

SHEET NO.
E0PBB01

PROPRIETARY: NOT FOR DISCLOSURE OR USE WITHOUT THE WRITTEN CONSENT OF BURR COMPUTER ENVIRONMENTS, INC.

© BURR COMPUTER ENVIRONMENTS, INC.
9/6/2024 9:23:36 AM
Autodesk Docs://2370-EDGAR,1-1/C2370-EDGAR,1-1/C2370-EDGAR,1-1-P_2MW-ELEC-OTHER_R23.rvt

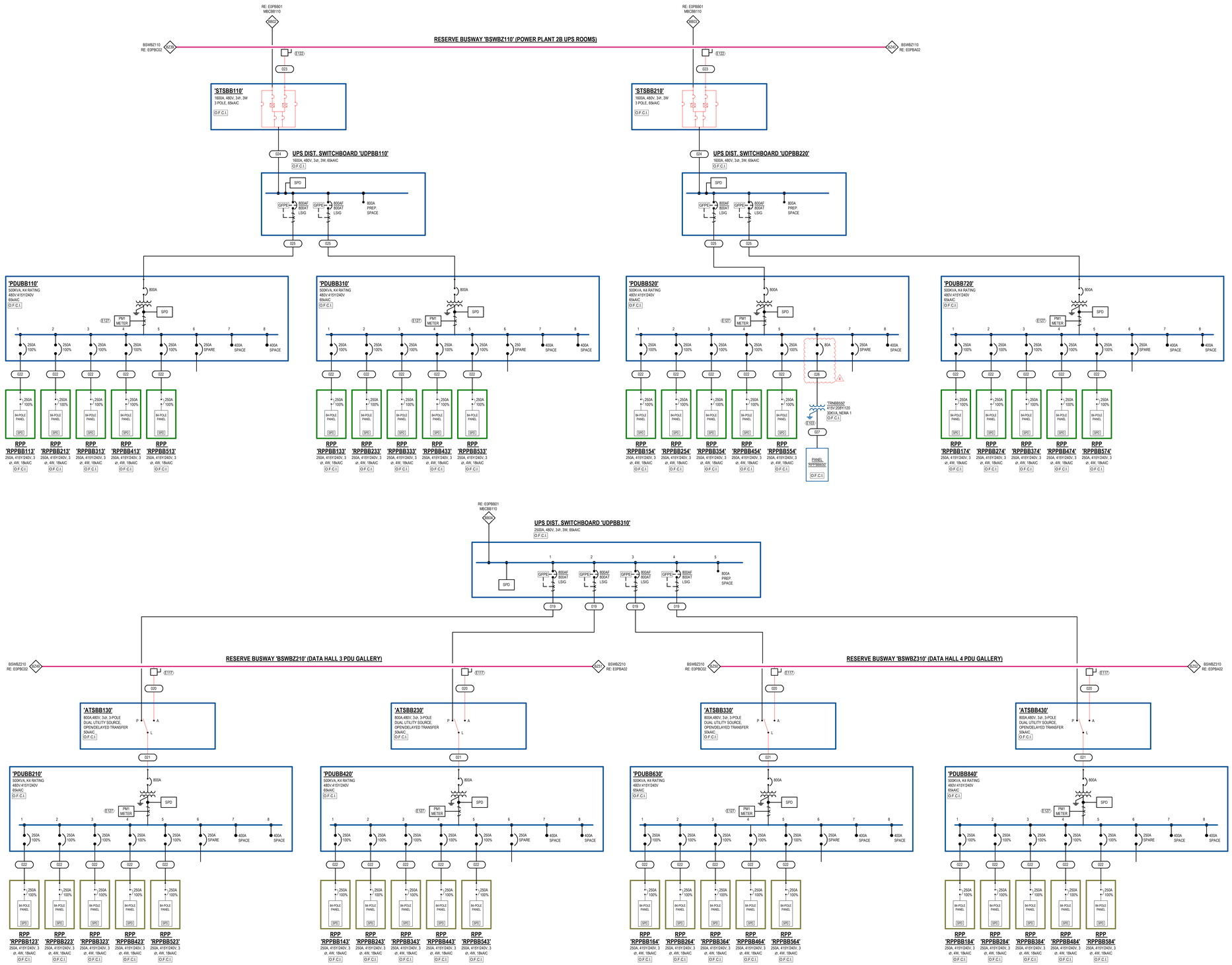

1 ELECTRICAL PARTIAL ONE-LINE DIAGRAM - PP2B - BLOCK B

SCALE: NOT TO SCALE

ONE-LINE GENERAL NOTES:

1. REFER TO GENERAL ELECTRICAL NOTES, SYMBOLS, AND ABBREVIATIONS SHEET E000001 FOR ALL SYMBOLS ON THIS SHEET.
2. REFER TO BOOK SPECS FOR ELECTRICAL SPECIFICATIONS.
3. REFER TO E600000 SERIES SHEETS FOR FEEDER SCHEDULES, LOAD ANALYSES, AND FAULT CURRENT SCHEDULES.
4. PHASE ROTATION SHALL BE A-B-C CLOCKWISE THROUGHOUT SYSTEM.
5. POWER QUALITY METER "PM1" INDICATES SCHNEIDER ELECTRIC PM8000 SERIES. POWER QUALITY METER "PM2" INDICATES SCHNEIDER ELECTRIC PM5000 SERIES.

LINETYPE LEGEND

NEW EQUIPMENT/FEEDERS	————
FUTURE EQUIPMENT/FEEDERS	- - - - - -
EQUIPMENT/FEEDERS BY OTHERS	— — — —

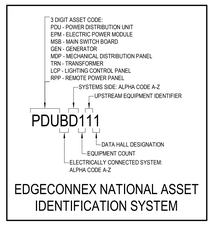

EDGECONNEX NATIONAL ASSET IDENTIFICATION SYSTEM

KEYED NOTES:

E103	REFER TO GROUNDING ONE-LINE DIAGRAMS SHEET SERIES E0EXXXX FOR ADDITIONAL INFORMATION.
E117	PROVIDE BUSWAY TAP SAME MANUFACTURER AS BUSWAY. TAP SHALL INCLUDE 800A/3P BREAKER AND MATCH BUSWAY AIC RATING.
E122	PROVIDE BUSWAY TAP BY SAME MANUFACTURER AS BUSWAY. TAP SHALL INCLUDE 1600A/3P BREAKER.
E127	PROVIDE 24V CONNECTION TO METER FROM BMP PANEL. PROVIDE CABLING AND CONDUIT AS REQUIRED.

BCEI
BURR COMPUTER ENVIRONMENTS, INC.
MEP ENGINEERS
10400 RODGERS ROAD | HOUSTON, TX 77070
281.374.8644

Gensler
CONSULTING ARCHITECTS
999 PEACHTREE ST NE | SUITE 1400 | ATLANTA, GA 30309
404.507.1000

Kimley»Horn
CONSULTING STRUCTURAL ENGINEERS
11720 AMBER PARK DRIVE | SUITE 600 | ALPHARETTA, GA 30009
770.619.7280

Kimley»Horn
CONSULTING CIVIL ENGINEERS
1200 PEACHTREE ST NE | SUITE 800 | ATLANTA, GA 30309
404.419.8700

edgeconnex®

ATL11

ADDRESS
4850 STONEWALL TELL RD
UNION CITY, GA 30349

ISSUES & REVISIONS

NO	DATE	DESCRIPTION
1	06.21.2024	ISSUE FOR PERMIT
2	07.24.2024	CITY COMMENTS
3	09.06.2024	ADDENDUM 01
4	01.21.2025	ADDENDUM 02

SEAL

Ms.PE031907 PROFESSIONAL ENGINEER DOUGLAS G. CARTER
1-21-25
Exp.: 12-31-25

ELECTRICAL ONE-LINE DIAGRAM - PP2B - BLOCK B

DRAWN: LJS
REVIEWED: DGC
PROJECT NO: C2370

SHEET NO.
E0PBB02

PROPRIETARY: NOT FOR DISCLOSURE OR USE WITHOUT THE WRITTEN CONSENT OF BURR COMPUTER ENVIRONMENTS, INC.

© BURR COMPUTER ENVIRONMENTS, INC.
1/30/2025 6:28:11 PM
Autodesk Docs://C370-EDGAT1/11021Dc0CAATL11/E0PBB02_2MW-ELEC-OTHER_R23.rvt

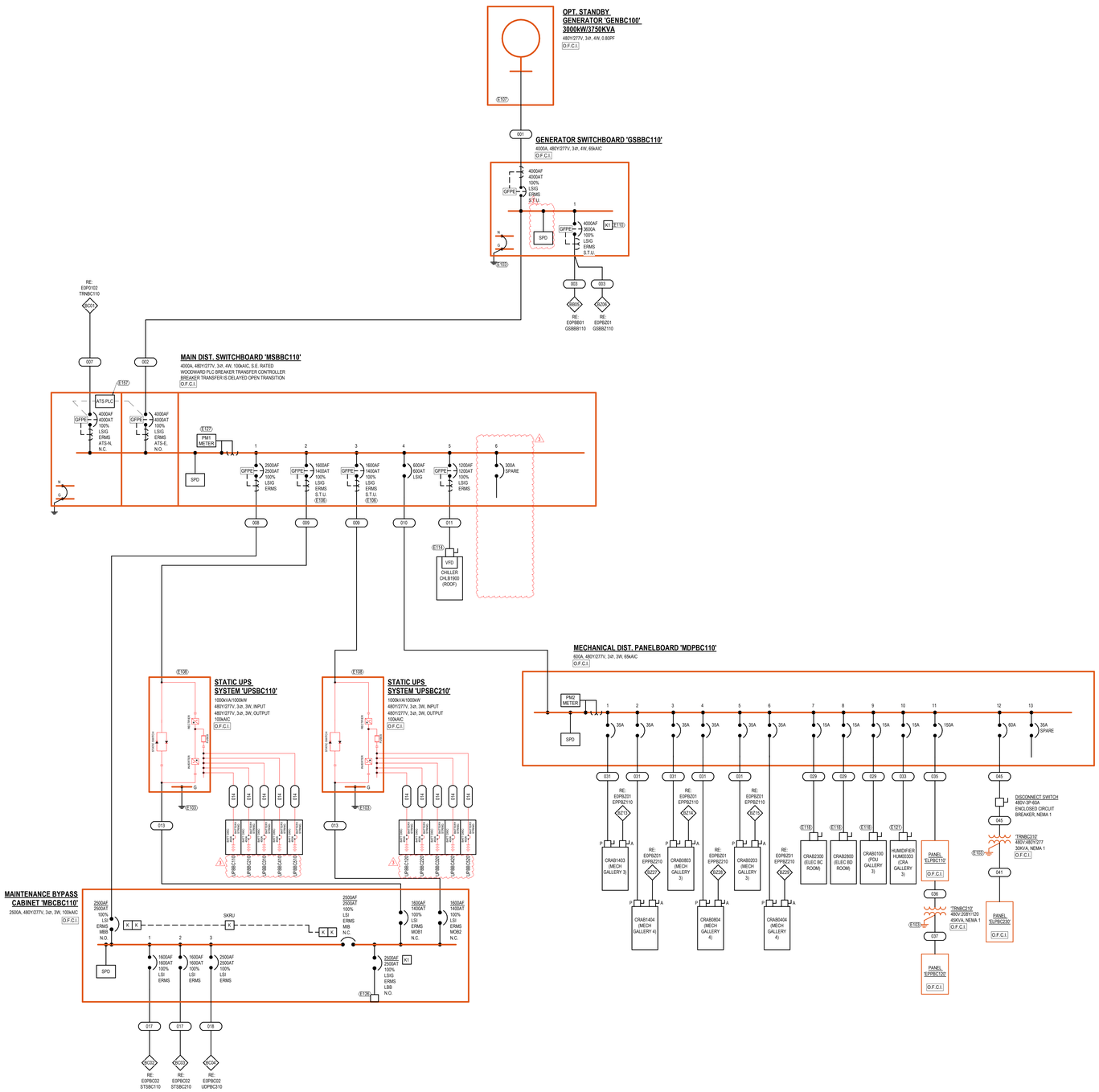

1 **ELECTRICAL PARTIAL ONE-LINE DIAGRAM - PP2B - BLOCK C**
SCALE: NOT TO SCALE

ONE-LINE GENERAL NOTES:

1. REFER TO GENERAL ELECTRICAL NOTES, SYMBOLS, AND ABBREVIATIONS SHEET E000001 FOR ALL SYMBOLS ON THIS SHEET.
2. REFER TO BOOK SPECS FOR ELECTRICAL SPECIFICATIONS.
3. REFER TO E600000 SERIES SHEETS FOR FEEDER SCHEDULES, LOAD ANALYSES, AND FAULT CURRENT SCHEDULES.
4. PHASE ROTATION SHALL BE A-B-C CLOCKWISE THROUGHOUT SYSTEM.
5. POWER QUALITY METER "PM1" INDICATES SCHNEIDER ELECTRIC PM8000 SERIES. POWER QUALITY METER "PM2" INDICATES SCHNEIDER ELECTRIC PM6000 SERIES.

LINETYPE LEGEND

NEW EQUIPMENT/FEEDERS
FUTURE EQUIPMENT/FEEDERS
EQUIPMENT/FEEDERS BY OTHERS

EDGECONNEX NATIONAL ASSET IDENTIFICATION SYSTEM

3 DIGIT ASSET CODE:
PDU - POWER DISTRIBUTION UNIT
EPM - ELECTRIC POWER MODULE
MSB - MAIN SWITCH BOARD
GEN - GENERATOR
MDP - MECHANICAL DISTRIBUTION PANEL
TRN - TRANSFORMER
LCP - LIGHTING CONTROL PANEL
RPP - REMOTE POWER PANEL

PDUBD111
- SYSTEMS SIDE: ALPHA CODE A-Z
- UPSTREAM EQUIPMENT IDENTIFIER
- DATA HALL DESIGNATION
- EQUIPMENT COUNT
- ELECTRICALLY CONNECTED SYSTEM: ALPHA CODE A-Z

KEYED NOTES:

E103	REFER TO GROUNDING ONE-LINE DIAGRAMS SHEET SERIES E0EXXXX FOR ADDITIONAL INFORMATION.
E106	PROVIDE 120V CONNECTION FROM UPS TO SHUNT-TRIP BREAKER.
E107	PROVIDE GENERATOR START CONTROL WIRING PER DETAIL 1E500004.
E108	PROVIDE UPS INTERCONNECT CONTROL WIRING PER DETAIL 1E500004.
E110	GENERATOR AND MAINTENANCE BYPASS CABINET LOAD BANK BREAKER KIRK KEYS FURNISHED WITH GEAR. KIRK KEYS SHALL BE INSTALLED SO ONLY ONE GENERATOR OR MAINTENANCE BYPASS CABINET LOAD BANK BREAKER CAN BE CLOSED AT A SINGLE TIME.
E114	DISCONNECT AND VFD PROVIDED WITH EQUIPMENT BY MANUFACTURER.
E118	DISCONNECT PROVIDED WITH EQUIPMENT BY MANUFACTURER.
E121	480V/30A FUSED AT 25AIN1
E126	LOAD BANK CAM LOCK CONNECTIONS PROVIDED WITH SWITCHGEAR AND FACTORY WIRED BY MANUFACTURER.
E127	PROVIDE 24V CONNECTION TO METER FROM BMP PANEL. PROVDE CABLING AND CONDUIT AS REQUIRED.
E157	PROVIDE PLC INTERLOCK CABLING BETWEEN BREAKER TRANSFER PAIRS AS REQUIRED. PROVIDE 24V CONNECTION TO PLC CONTROLLER FROM BMP PANEL LOCATED IN UPS ELECTRICAL ROOM. PROVIDE CABLING AND CONDUIT AS REQUIRED.

BCEI BURR COMPUTER ENVIRONMENTS, INC.
MEP ENGINEERS
10400 RODGERS ROAD | HOUSTON, TX 77070
281.374.8644

Gensler
CONSULTING ARCHITECTS
999 PEACHTREE ST NE | SUITE 1400 | ATLANTA, GA 30309
404.507.1000

Kimley»Horn
CONSULTING STRUCTURAL ENGINEERS
11720 AMBER PARK DRIVE | SUITE 600 | ALPHARETTA, GA 30009
770.619.7280

Kimley»Horn
CONSULTING CIVIL ENGINEERS
1200 PEACHTREE ST NE | SUITE 800 | ATLANTA, GA 30309
404.419.8700

edgeconnex®
ATL11
ADDRESS:
4850 STONEWALL TELL RD
UNION CITY, GA 30349

ISSUES & REVISIONS

NO	DATE	DESCRIPTION
1	06.21.2024	ISSUE FOR PERMIT
2	07.24.2024	CITY COMMENTS
3	09.06.2024	ADDENDUM 01

SEAL
No.PE051907 PROFESSIONAL ENGINEER
9-6-24
Exp: 12-31-24

ELECTRICAL ONE-LINE DIAGRAM - PP2B - BLOCK C

DRAWN: LJS
REVIEWED: DGC
PROJECT NO: C2370

SHEET NO.
E0PBC01

PROPRIETARY: NOT FOR DISCLOSURE OR USE WITHOUT THE WRITTEN CONSENT OF BURR COMPUTER ENVIRONMENTS, INC.

© BURR COMPUTER ENVIRONMENTS, INC.
9/6/2024 9:24:01 AM
Autodesk Docs://C370-EDGAR,L11/C370-EDGAR,L11-PP2B-BLOCK-C/ATL11-PP_2MW-ELEC-OTHER_R23.rvt

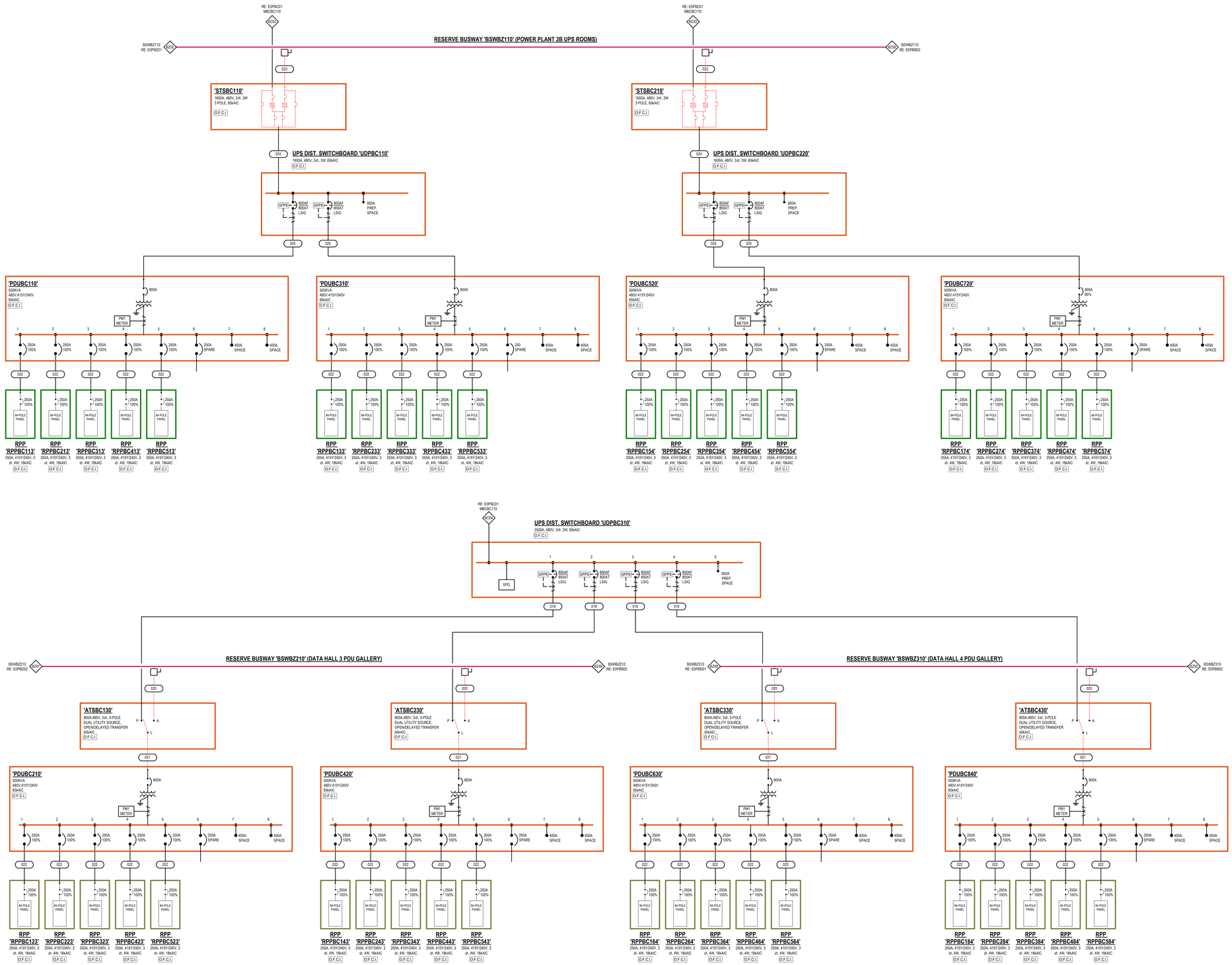

1 **ELECTRICAL PARTIAL ONE-LINE DIAGRAM - PP2B - BLOCK C**

SCALE: NOT TO SCALE

ONE-LINE GENERAL NOTES:

1. REFER TO GENERAL ELECTRICAL NOTES, SYMBOLS, AND ABBREVIATIONS SHEET E000001 FOR ALL SYMBOLS ON THIS SHEET.
2. REFER TO BOOK SPECS FOR ELECTRICAL SPECIFICATIONS.
3. REFER TO E600000 SERIES SHEETS FOR FEEDER SCHEDULES, LOAD ANALYSES, AND FAULT CURRENT SCHEDULES.
4. PHASE ROTATION SHALL BE A-B-C CLOCKWISE THROUGHOUT SYSTEM.
5. POWER QUALITY METER "PM1" INDICATES SCHNEIDER ELECTRIC PM8000 SERIES. POWER QUALITY METER "PM2" INDICATES SCHNEIDER ELECTRIC PM5000 SERIES.

LINETYPE LEGEND

NEW EQUIPMENT/FEEDERS
FUTURE EQUIPMENT/FEEDERS
EQUIPMENT/FEEDERS BY OTHERS

3 DIGIT ASSET CODE:
PDU - POWER DISTRIBUTION UNIT
EPM - ELECTRIC POWER MODULE
MSB - MAIN SWITCH BOARD
GEN - GENERATOR
MDP - MECHANICAL DISTRIBUTION PANEL
TRN - TRANSFORMER
LCP - LIGHTING CONTROL PANEL
RPP - REMOTE POWER PANEL
SYSTEMS SIDE: ALPHA CODE A-Z
UPSTREAM EQUIPMENT IDENTIFIER

PDUBD111

DATA HALL DESIGNATION
EQUIPMENT COUNT
ELECTRICALLY CONNECTED SYSTEM: ALPHA CODE A-Z

EDGECONNEX NATIONAL ASSET IDENTIFICATION SYSTEM

KEYED NOTES:

BCEI
BURR COMPUTER ENVIRONMENTS, INC.
MEP ENGINEERS
10400 RODGERS ROAD | HOUSTON, TX 77070
281.374.8644

Gensler
CONSULTING ARCHITECTS
999 PEACHTREE ST NE | SUITE 1400 | ATLANTA, GA 30309
404.507.1000

Kimley»Horn
CONSULTING STRUCTURAL ENGINEERS
11720 AMBER PARK DRIVE | SUITE 600 | ALPHARETTA, GA 30009
770.619.7280

Kimley»Horn
CONSULTING CIVIL ENGINEERS
1200 PEACHTREE ST NE | SUITE 850 | ATLANTA, GA 30309
404.419.8700

edgeconnex®

ATL11

ADDRESS
4850 STONEWALL TELL RD
UNION CITY, GA 30349

ISSUES & REVISIONS

NO	DATE	DESCRIPTION
1	06.21.2024	ISSUE FOR PERMIT
2	07.24.2024	CITY COMMENTS
3	09.06.2024	ADDENDUM 01

SEAL

Mo.PE031997 PROFESSIONAL ENGINEER DOUG ASG CARGILE
9-6-24
Exp: 12-31-24

ELECTRICAL ONE-LINE DIAGRAM - PP2B - BLOCK C

DRAWN: LJS
REVIEWED: DGC
PROJECT NO: C2370

SHEET NO.
E0PBC02

PROPRIETARY: NOT FOR DISCLOSURE OR USE WITHOUT THE WRITTEN CONSENT OF BURR COMPUTER ENVIRONMENTS, INC.

© BURR COMPUTER ENVIRONMENTS, INC.
9/6/2024 9:24:03 AM
Autodesk Docs://C2370-EDGA-ATL11/C2370-EDGA-ATL11-EP_2MW-ELEC-OTHER_R23.rvt

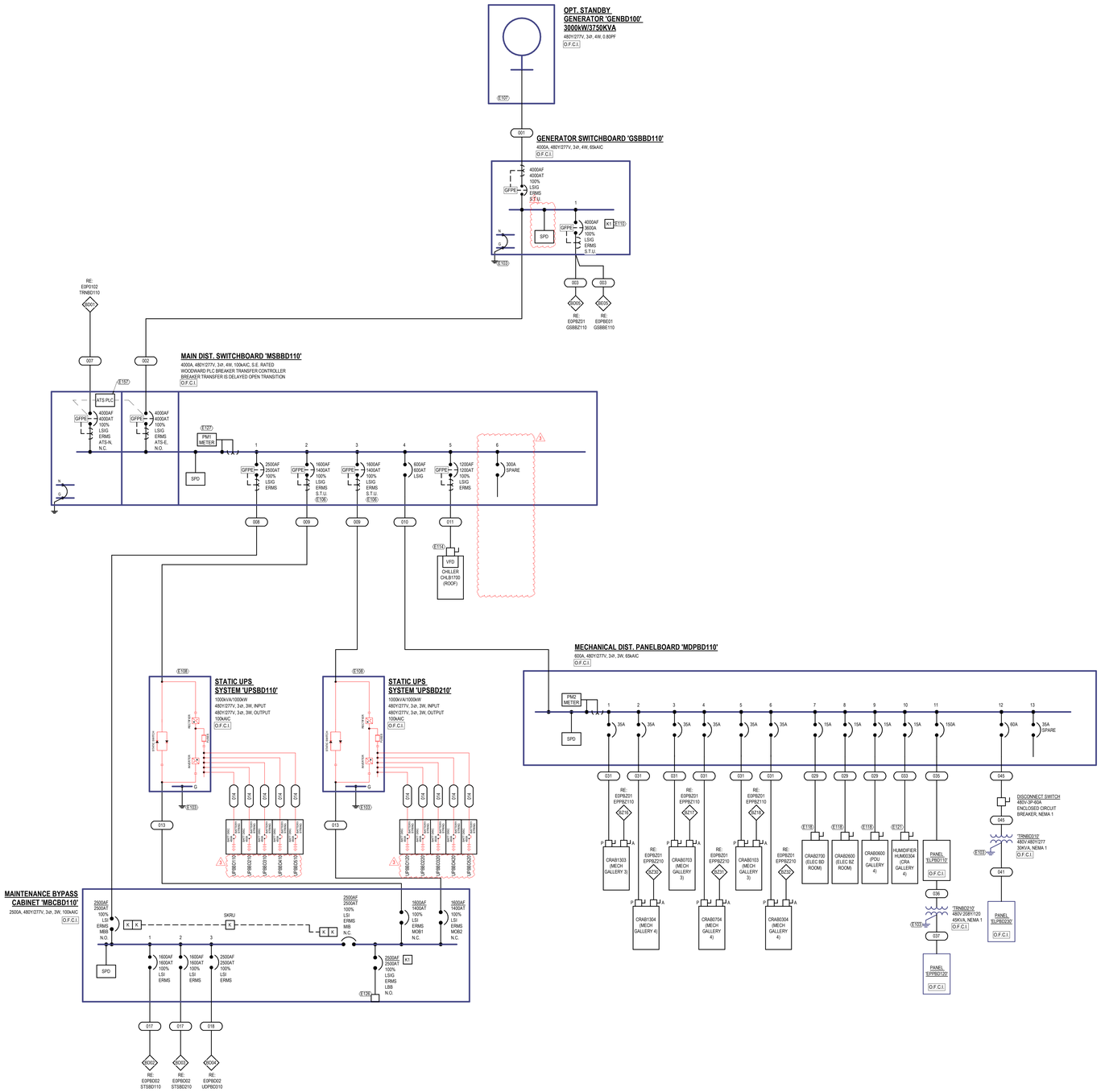

1 **ELECTRICAL PARTIAL ONE-LINE DIAGRAM - PP2B - BLOCK D**
SCALE: NOT TO SCALE

ONE-LINE GENERAL NOTES:

1. REFER TO GENERAL ELECTRICAL NOTES, SYMBOLS, AND ABBREVIATIONS SHEET E000001 FOR ALL SYMBOLS ON THIS SHEET.
2. REFER TO BOOK SPECS FOR ELECTRICAL SPECIFICATIONS.
3. REFER TO E600000 SERIES SHEETS FOR FEEDER SCHEDULES, LOAD ANALYSES, AND FAULT CURRENT SCHEDULES.
4. PHASE ROTATION SHALL BE A-B-C CLOCKWISE THROUGHOUT SYSTEM.
5. POWER QUALITY METER "PM1" INDICATES SCHNEIDER ELECTRIC PM8000 SERIES. POWER QUALITY METER "PM2" INDICATES SCHNEIDER ELECTRIC PM6000 SERIES.

LINETYPE LEGEND

NEW EQUIPMENT/FEEDERS
FUTURE EQUIPMENT/FEEDERS
EQUIPMENT/FEEDERS BY OTHERS

EDGECONNEX NATIONAL ASSET IDENTIFICATION SYSTEM

3 DIGIT ASSET CODE:
PDU - POWER DISTRIBUTION UNIT
EPM - ELECTRIC POWER MODULE
MSB - MAIN SWITCH BOARD
GEN - GENERATOR
MDP - MECHANICAL DISTRIBUTION PANEL
TRN - TRANSFORMER
LCP - LIGHTING CONTROL PANEL
RPP - REMOTE POWER PANEL

PDUBD111
- SYSTEMS SIDE: ALPHA CODE A-Z
- UPSTREAM EQUIPMENT IDENTIFIER
- DATA HALL DESIGNATION
- EQUIPMENT COUNT
- ELECTRICALLY CONNECTED SYSTEM: ALPHA CODE A-Z

KEYED NOTES:

E103	REFER TO GROUNDING ONE-LINE DIAGRAMS SHEET SERIES E0EXXXX FOR ADDITIONAL INFORMATION.
E106	PROVIDE 120V CONNECTION FROM UPS TO SHUNT-TRIP BREAKER.
E107	PROVIDE GENERATOR START CONTROL WIRING PER DETAIL 1E500004.
E108	PROVIDE UPS INTERCONNECT CONTROL WIRING PER DETAIL 1E500004.
E110	GENERATOR AND MAINTENANCE BYPASS CABINET LOAD BANK BREAKER KIRK KEYS FURNISHED WITH GEAR. KIRK KEYS SHALL BE INSTALLED SO ONLY ONE GENERATOR OR MAINTENANCE BYPASS CABINET LOAD BANK BREAKER CAN BE CLOSED AT A SINGLE TIME.
E114	DISCONNECT AND VFD PROVIDED WITH EQUIPMENT BY MANUFACTURER.
E118	DISCONNECT PROVIDED WITH EQUIPMENT BY MANUFACTURER.
E121	480V/30A FUSED AT 25AINT
E126	LOAD BANK CAM LOCK CONNECTIONS PROVIDED WITH SWITCHGEAR AND FACTORY WIRED BY MANUFACTURER.
E127	PROVIDE 24V CONNECTION TO METER FROM BMP PANEL. PROVDE CABLING AND CONDUIT AS REQUIRED.
E157	PROVIDE PLC INTERLOCK CABLING BETWEEN BREAKER TRANSFER PAIRS AS REQUIRED. PROVIDE 24V CONNECTION TO PLC CONTROLLER FROM BMP PANEL LOCATED IN UPS ELECTRICAL ROOM. PROVIDE CABLING AND CONDUIT AS REQUIRED.

BCEI BURR COMPUTER ENVIRONMENTS, INC.
MEP ENGINEERS
10400 RODGERS ROAD | HOUSTON, TX 77070
281.374.8644

Gensler
CONSULTING ARCHITECTS
999 PEACHTREE ST NE | SUITE 1400 | ATLANTA, GA 30309
404.507.1000

Kimley»Horn
CONSULTING STRUCTURAL ENGINEERS
11720 AMBER PARK DRIVE | SUITE 600 | ALPHARETTA, GA 30009
770.619.7280

Kimley»Horn
CONSULTING CIVIL ENGINEERS
1200 PEACHTREE ST NE | SUITE 800 | ATLANTA, GA 30309
404.419.8700

edgeconnex®

ATL11

ADDRESS
4850 STONEWALL TELL RD
UNION CITY, GA 30349

ISSUES & REVISIONS

NO	DATE	DESCRIPTION
1	06.21.2024	ISSUE FOR PERMIT
2	07.24.2024	CITY COMMENTS
3	09.06.2024	ADDENDUM 01

SEAL
Mo.PE051907 PROFESSIONAL ENGINEER
9-6-24
Exp: 12-31-24

ELECTRICAL ONE-LINE DIAGRAM - PP2B - BLOCK D

DRAWN: LJS
REVIEWED: DGC
PROJECT NO: C2370

SHEET NO.
E0PBD01

PROPRIETARY: NOT FOR DISCLOSURE OR USE WITHOUT THE WRITTEN CONSENT OF BURR COMPUTER ENVIRONMENTS, INC.

© BURR COMPUTER ENVIRONMENTS, INC.
9/6/2024 9:24:05 AM
Autodesk Docs://2370-EDGAR,LLC/2370-EDGAR,LLC-ATL11-P2P-2MW-ELEC-OTHER_R23.rvt

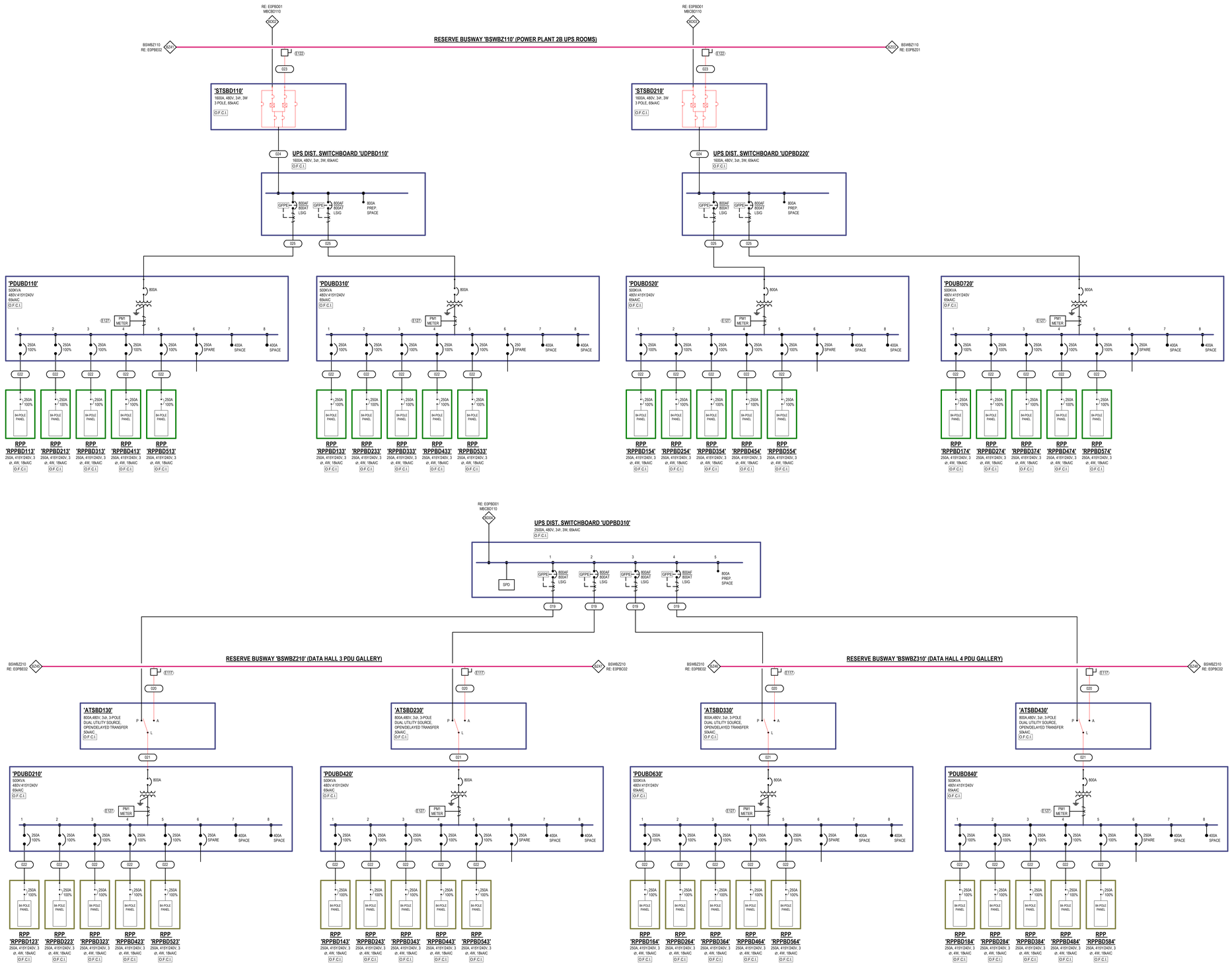

1 ELECTRICAL PARTIAL ONE-LINE DIAGRAM - PP2B - BLOCK D

SCALE: NOT TO SCALE

ONE-LINE GENERAL NOTES:

1. REFER TO GENERAL ELECTRICAL NOTES, SYMBOLS, AND ABBREVIATIONS SHEET E000001 FOR ALL SYMBOLS ON THIS SHEET.
2. REFER TO BOOK SPECS FOR ELECTRICAL SPECIFICATIONS.
3. REFER TO E600000 SERIES SHEETS FOR FEEDER SCHEDULES, LOAD ANALYSES, AND FAULT CURRENT SCHEDULES.
4. PHASE ROTATION SHALL BE A-B-C CLOCKWISE THROUGHOUT SYSTEM.
5. POWER QUALITY METER "PM1" INDICATES SCHNEIDER ELECTRIC PM8000 SERIES. POWER QUALITY METER "PM2" INDICATES SCHNEIDER ELECTRIC PM8000 SERIES.

LINETYPE LEGEND

NEW EQUIPMENT/FEEDERS
FUTURE EQUIPMENT/FEEDERS
EQUIPMENT/FEEDERS BY OTHERS

EDGECONNEX NATIONAL ASSET IDENTIFICATION SYSTEM

3 DIGIT ASSET CODE:
PDU - POWER DISTRIBUTION UNIT
EPM - ELECTRIC POWER MODULE
MSB - MAIN SWITCH BOARD
GEN - GENERATOR
MDP - MECHANICAL DISTRIBUTION PANEL
TRN - TRANSFORMER
LCP - LIGHTING CONTROL PANEL
RPP - REMOTE POWER PANEL
— SYSTEMS SIDE: ALPHA CODE A-Z
— UPSTREAM EQUIPMENT IDENTIFIER

PDUBD111

— DATA HALL DESIGNATION
— EQUIPMENT COUNT
— ELECTRICALLY CONNECTED SYSTEM: ALPHA CODE A-Z

KEYED NOTES:

E117	PROVIDE BUSWAY TAP SAME MANUFACTURER AS BUSWAY. TAP SHALL INCLUDE 800A/3P BREAKER AND MATCH BUSWAY A/C RATING.
E122	PROVIDE BUSWAY TAP BY SAME MANUFACTURER AS BUSWAY. TAP SHALL INCLUDE 1600A/3P BREAKER.
E127	PROVIDE 24V CONNECTION TO METER FROM BMP PANEL. PROVIDE CABLING AND CONDUIT AS REQUIRED.

BCEI BURR COMPUTER ENVIRONMENTS, INC.
MEP ENGINEERS
10400 RODGERS ROAD | HOUSTON, TX 77070
281.374.8644

Gensler
CONSULTING ARCHITECTS
999 PEACHTREE ST NE | SUITE 1400 | ATLANTA, GA 30309
404.507.1000

Kimley»Horn
CONSULTING STRUCTURAL ENGINEERS
11720 AMBER PARK DRIVE | SUITE 600 | ALPHARETTA, GA 30009
770.619.7280

Kimley»Horn
CONSULTING CIVIL ENGINEERS
1200 PEACHTREE ST NE | SUITE 800 | ATLANTA, GA 30309
404.419.8700

edgeconnex®
ATL11
ADDRESS
4850 STONEWALL TELL RD
UNION CITY, GA 30349

ISSUES & REVISIONS

NO	DATE	DESCRIPTION
1	06.21.2024	ISSUE FOR PERMIT
2	07.24.2024	CITY COMMENTS
3	09.06.2024	ADDENDUM 01

SEAL

REGISTERED PROFESSIONAL ENGINEER No.PE031937 PROFESSIONAL ENGINEER DOUG ASG CARDER
9-6-24
Exp: 12-31-24

ELECTRICAL ONE-LINE DIAGRAM - PP2B - BLOCK D

DRAWN: LJS
REVIEWED: DGC
PROJECT NO: C2370

SHEET NO.
E0PBD02

PROPRIETARY: NOT FOR DISCLOSURE OR USE WITHOUT THE WRITTEN CONSENT OF BURR COMPUTER ENVIRONMENTS, INC.

© BURR COMPUTER ENVIRONMENTS, INC.
9/6/2024 9:24:06 AM
Autodesk Docs://2370-EDGAT1/2370-EDGAT1-1/E0PBD02-EDGAT1-1-07_2MW-ELEC-OTHER_R23.rvt

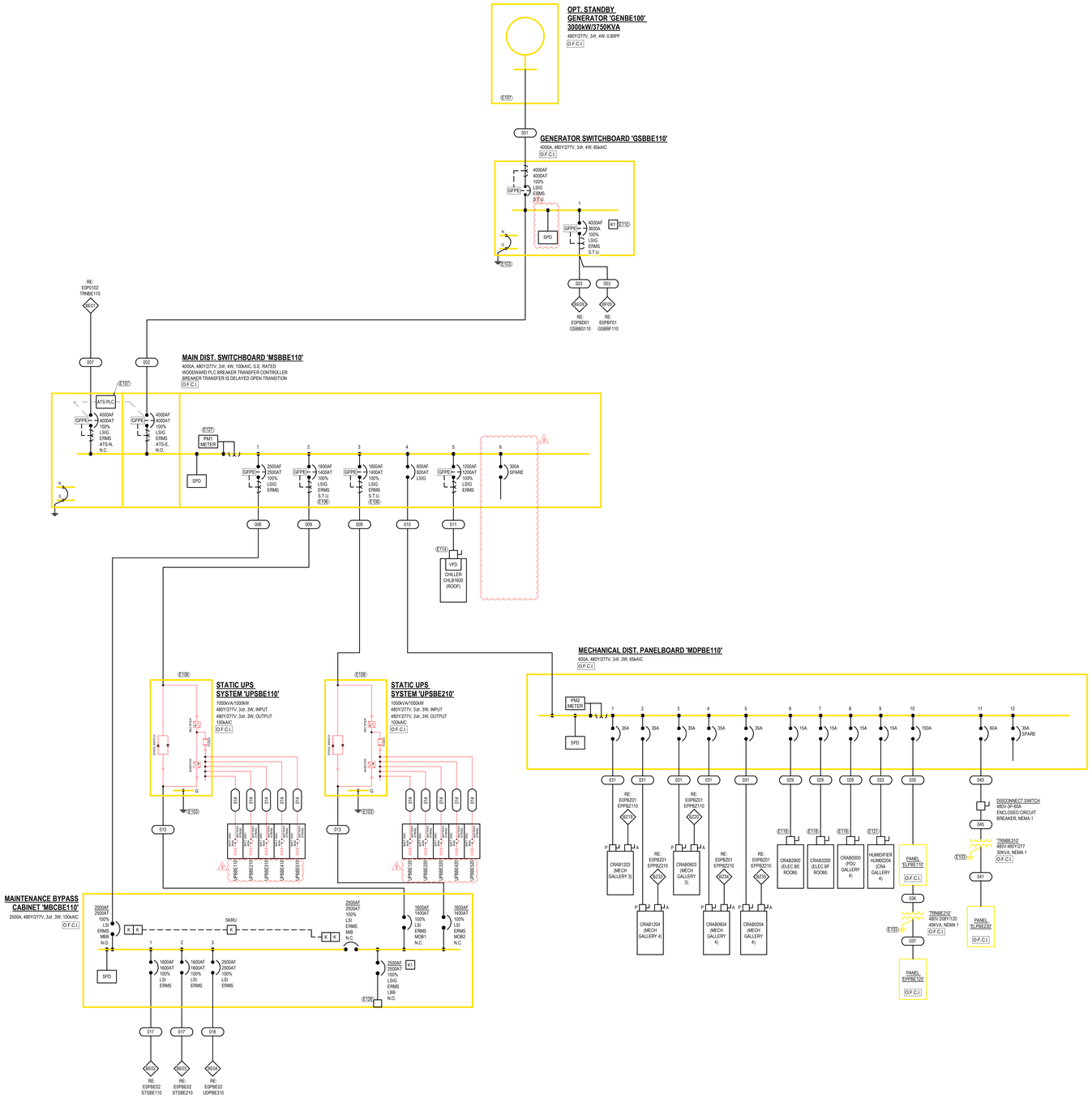

1 **ELECTRICAL PARTIAL ONE-LINE DIAGRAM - PP2B - BLOCK E**
SCALE: NOT TO SCALE

ONE-LINE GENERAL NOTES:

1. REFER TO GENERAL ELECTRICAL NOTES, SYMBOLS, AND ABBREVIATIONS SHEET E000001 FOR ALL SYMBOLS ON THIS SHEET.
2. REFER TO BOOK SPECS FOR ELECTRICAL SPECIFICATIONS.
3. REFER TO E600000 SERIES SHEETS FOR FEEDER SCHEDULES, LOAD ANALYSES, AND FAULT CURRENT SCHEDULES.
4. PHASE ROTATION SHALL BE A-B-C CLOCKWISE THROUGHOUT SYSTEM.
5. POWER QUALITY METER "PM1" INDICATES SCHNEIDER ELECTRIC PM8000 SERIES. POWER QUALITY METER "PM2" INDICATES SCHNEIDER ELECTRIC PM6000 SERIES.

LINETYPE LEGEND

NEW EQUIPMENT/FEEDERS
FUTURE EQUIPMENT/FEEDERS
EQUIPMENT/FEEDERS BY OTHERS

EDGECONNEX NATIONAL ASSET IDENTIFICATION SYSTEM

3 DIGIT ASSET CODE:
PDU - POWER DISTRIBUTION UNIT
EPM - ELECTRIC POWER MODULE
MSB - MAIN SWITCH BOARD
GEN - GENERATOR
MDP - MECHANICAL DISTRIBUTION PANEL
TRN - TRANSFORMER
LCP - LIGHTING CONTROL PANEL
RPP - REMOTE POWER PANEL

PDUBD111
- SYSTEMS SIDE: ALPHA CODE A-Z
- UPSTREAM EQUIPMENT IDENTIFIER
- DATA HALL DESIGNATION
- EQUIPMENT COUNT
- ELECTRICALLY CONNECTED SYSTEM: ALPHA CODE A-Z

KEYED NOTES:

E103	REFER TO GROUNDING ONE-LINE DIAGRAMS SHEET SERIES E0EXXXX FOR ADDITIONAL INFORMATION.
E106	PROVIDE 120V CONNECTION FROM UPS TO SHUNT-TRIP BREAKER.
E107	PROVIDE GENERATOR START CONTROL WIRING PER DETAIL 1E500004.
E108	PROVIDE UPS INTERCONNECT CONTROL WIRING PER DETAIL 1E500004.
E110	GENERATOR AND MAINTENANCE BYPASS CABINET LOAD BANK BREAKER KIRK KEYS FURNISHED WITH GEAR. KIRK KEYS SHALL BE INSTALLED SO ONLY ONE GENERATOR OR MAINTENANCE BYPASS CABINET LOAD BANK BREAKER CAN BE CLOSED AT A SINGLE TIME.
E114	DISCONNECT AND VFD PROVIDED WITH EQUIPMENT BY MANUFACTURER.
E118	DISCONNECT PROVIDED WITH EQUIPMENT BY MANUFACTURER.
E121	480V/30A FUSED AT 25AIN1
E126	LOAD BANK CAM LOCK CONNECTIONS PROVIDED WITH SWITCHGEAR AND FACTORY WIRED BY MANUFACTURER.
E127	PROVIDE 24V CONNECTION TO METER FROM BMP PANEL. PROVDE CABLING AND CONDUIT AS REQUIRED.
E157	PROVIDE PLC INTERLOCK CABLING BETWEEN BREAKER TRANSFER PAIRS AS REQUIRED. PROVIDE 24V CONNECTION TO PLC CONTROLLER FROM BMP PANEL LOCATED IN UPS ELECTRICAL ROOM. PROVIDE CABLING AND CONDUIT AS REQUIRED.

BCEI BURR COMPUTER ENVIRONMENTS, INC.
MEP ENGINEERS
10400 RODGERS ROAD | HOUSTON, TX 77070
281.374.8644

Gensler
CONSULTING ARCHITECTS
999 PEACHTREE ST NE | SUITE 1400 | ATLANTA, GA 30309
404.507.1000

Kimley»Horn
CONSULTING STRUCTURAL ENGINEERS
11720 AMBER PARK DRIVE | SUITE 600 | ALPHARETTA, GA 30009
770.619.7280

Kimley»Horn
CONSULTING CIVIL ENGINEERS
1200 PEACHTREE ST NE | SUITE 800 | ATLANTA, GA 30309
404.419.8700

edgeconnex®

ATL11

ADDRESS
4850 STONEWALL TELL RD
UNION CITY, GA 30349

ISSUES & REVISIONS

NO	DATE	DESCRIPTION
1	06.21.2024	ISSUE FOR PERMIT
2	07.24.2024	CITY COMMENTS
3	09.06.2024	ADDENDUM 01

SEAL
No.PE051907 PROFESSIONAL ENGINEER
9-6-24
Exp: 12-31-24

ELECTRICAL ONE-LINE DIAGRAM - PP2B - BLOCK E

DRAWN: LJS
REVIEWED: DGC
PROJECT NO: C2370

SHEET NO.
E0PBE01

PROPRIETARY: NOT FOR DISCLOSURE OR USE WITHOUT THE WRITTEN CONSENT OF BURR COMPUTER ENVIRONMENTS, INC.

© BURR COMPUTER ENVIRONMENTS, INC.
9/6/2024 9:24:10 AM
Autodesk Docs://2370-EDGAATL11/2370-EDGAATL11-EP_2MW-ELEC-OTHER_R23.rvt

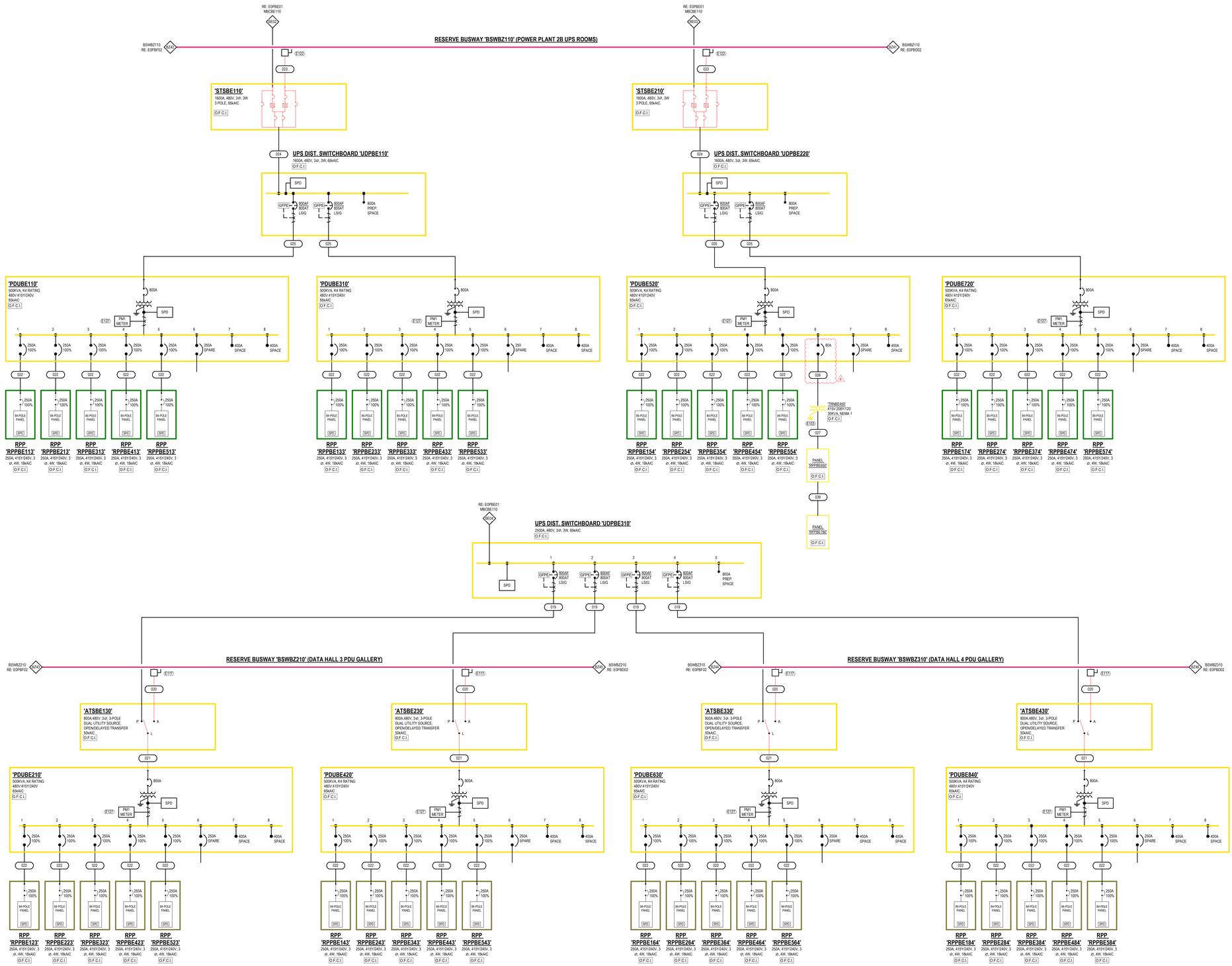

ONE-LINE GENERAL NOTES:

1. REFER TO GENERAL ELECTRICAL NOTES, SYMBOLS, AND ABBREVIATIONS SHEET E000001 FOR ALL SYMBOLS ON THIS SHEET.
2. REFER TO BOOK SPECS FOR ELECTRICAL SPECIFICATIONS.
3. REFER TO E600000 SERIES SHEETS FOR FEEDER SCHEDULES, LOAD ANALYSES, AND FAULT CURRENT SCHEDULES.
4. PHASE ROTATION SHALL BE A-B-C CLOCKWISE THROUGHOUT SYSTEM.
5. POWER QUALITY METER "PM1" INDICATES SCHNEIDER ELECTRIC PM8000 SERIES. POWER QUALITY METER "PM2" INDICATES SCHNEIDER ELECTRIC PM5000 SERIES.

LINETYPE LEGEND

NEW EQUIPMENT/FEEDERS	————
FUTURE EQUIPMENT/FEEDERS	- - - - - -
EQUIPMENT/FEEDERS BY OTHERS	— — — —

3 DIGIT ASSET CODE:
PDU - POWER DISTRIBUTION UNIT
EPM - ELECTRIC POWER MODULE
MSB - MAIN SWITCH BOARD
GEN - GENERATOR
MDP - MECHANICAL DISTRIBUTION PANEL
TRN - TRANSFORMER
LCP - LIGHTING CONTROL PANEL
RPP - REMOTE POWER PANEL

PDUBD111
- SYSTEMS SIDE: ALPHA CODE A-Z
- UPSTREAM EQUIPMENT IDENTIFIER
- DATA HALL DESIGNATION
- EQUIPMENT COUNT
- ELECTRICALLY CONNECTED SYSTEM: ALPHA CODE A-Z

EDGECONNEX NATIONAL ASSET IDENTIFICATION SYSTEM

KEYED NOTES:

E103	REFER TO GROUNDING ONE-LINE DIAGRAMS SHEET SERIES E0EXXXX FOR ADDITIONAL INFORMATION.
E117	PROVIDE BUSWAY TAP SAME MANUFACTURER AS BUSWAY. TAP SHALL INCLUDE 800A/3P BREAKER AND MATCH BUSWAY AIC RATING.
E122	PROVIDE BUSWAY TAP BY SAME MANUFACTURER AS BUSWAY. TAP SHALL INCLUDE 1600A/3P BREAKER.
E127	PROVIDE 24V CONNECTION TO METER FROM BMP PANEL. PROVIDE CABLING AND CONDUIT AS REQUIRED.

1 ELECTRICAL PARTIAL ONE-LINE DIAGRAM - PP2B - BLOCK E

SCALE: NOT TO SCALE

BCEI BURR COMPUTER ENVIRONMENTS, INC.
MEP ENGINEERS
10400 RODGERS ROAD | HOUSTON, TX 77070
281.374.8644

Gensler
CONSULTING ARCHITECTS
999 PEACHTREE ST NE | SUITE 1400 | ATLANTA, GA 30309
404.507.1000

Kimley»Horn
CONSULTING STRUCTURAL ENGINEERS
11720 AMBER PARK DRIVE | SUITE 600 | ALPHARETTA, GA 30009
770.619.7280

Kimley»Horn
CONSULTING CIVIL ENGINEERS
1200 PEACHTREE ST NE | SUITE 800 | ATLANTA, GA 30309
404.419.8700

edgeconnex
ATL11
ADDRESS
4850 STONEWALL TELL RD
UNION CITY, GA 30349

ISSUES & REVISIONS

NO	DATE	DESCRIPTION
1	06.21.2024	ISSUE FOR PERMIT
2	07.24.2024	CITY COMMENTS
3	09.06.2024	ADDENDUM 01
4	01.21.2025	ADDENDUM 02

SEAL

Ms.PE031927 PROFESSIONAL ENGINEER DOUGLAS G. CARTER
1-21-25
Exp.: 12-31-25

ELECTRICAL ONE-LINE DIAGRAM - PP2B - BLOCK E

DRAWN: LJS
REVIEWED: DGC
PROJECT NO: C2370

SHEET NO.
E0PBE02

PROPRIETARY: NOT FOR DISCLOSURE OR USE WITHOUT THE WRITTEN CONSENT OF BURR COMPUTER ENVIRONMENTS, INC.

© BURR COMPUTER ENVIRONMENTS, INC.
1/30/2025 6:28:14 PM
Autodesk Docs://C2370-EDGA-ATL11/C2370-EDGA-ATL11-EP_2MW-ELEC-OTHER_R23.rvt

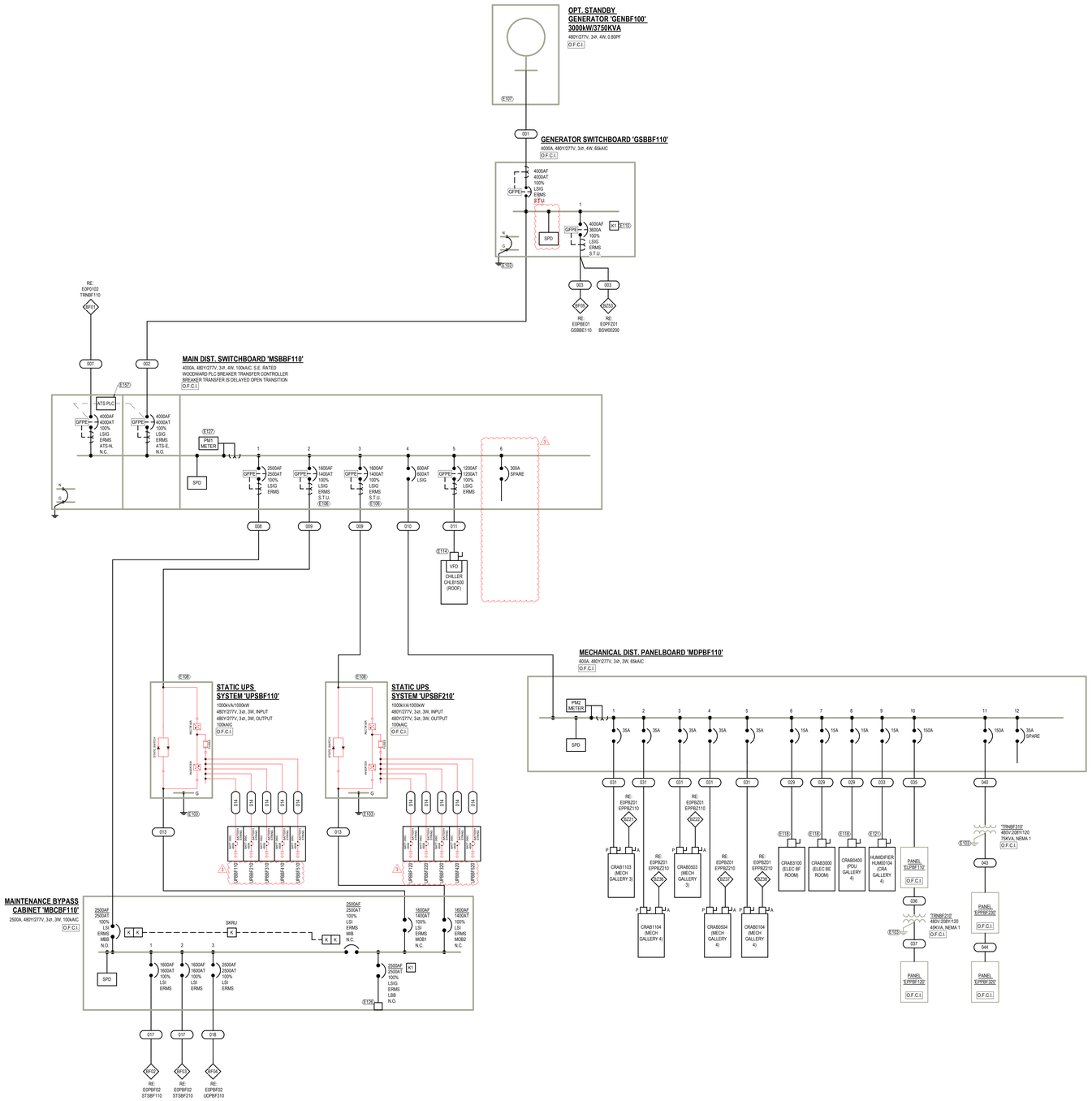

1 **ELECTRICAL PARTIAL ONE-LINE DIAGRAM - PP2B - BLOCK F**

SCALE: NOT TO SCALE

ONE-LINE GENERAL NOTES:

1. REFER TO GENERAL ELECTRICAL NOTES, SYMBOLS, AND ABBREVIATIONS SHEET E000001 FOR ALL SYMBOLS ON THIS SHEET.
2. REFER TO BOOK SPECS FOR ELECTRICAL SPECIFICATIONS.
3. REFER TO E600000 SERIES SHEETS FOR FEEDER SCHEDULES, LOAD ANALYSES, AND FAULT CURRENT SCHEDULES.
4. PHASE ROTATION SHALL BE A-B-C CLOCKWISE THROUGHOUT SYSTEM.
5. POWER QUALITY METER "PM1" INDICATES SCHNEIDER ELECTRIC PM8000 SERIES. POWER QUALITY METER "PM2" INDICATES SCHNEIDER ELECTRIC PM6000 SERIES.

LINETYPE LEGEND

NEW EQUIPMENT/FEEDERS
FUTURE EQUIPMENT/FEEDERS
EQUIPMENT/FEEDERS BY OTHERS

3 DIGIT ASSET CODE:
PDU - POWER DISTRIBUTION UNIT
EPM - ELECTRIC POWER MODULE
MSB - MAIN SWITCH BOARD
GEN - GENERATOR
MDP - MECHANICAL DISTRIBUTION PANEL
TRN - TRANSFORMER
LCP - LIGHTING CONTROL PANEL
RPP - REMOTE POWER PANEL

PDUBD111
- SYSTEMS SIDE: ALPHA CODE A-Z
- UPSTREAM EQUIPMENT IDENTIFIER
- DATA HALL DESIGNATION
- EQUIPMENT COUNT
- ELECTRICALLY CONNECTED SYSTEM: ALPHA CODE A-Z

EDGECONNEX NATIONAL ASSET IDENTIFICATION SYSTEM

KEYED NOTES:

E103	REFER TO GROUNDING ONE-LINE DIAGRAMS SHEET SERIES E0EXXXX FOR ADDITIONAL INFORMATION.
E106	PROVIDE 120V CONNECTION FROM UPS TO SHUNT-TRIP BREAKER.
E107	PROVIDE GENERATOR START CONTROL WIRING PER DETAIL 1E500004.
E108	PROVIDE UPS INTERCONNECT CONTROL WIRING PER DETAIL 1E500004.
E110	GENERATOR AND MAINTENANCE BYPASS CABINET LOAD BANK BREAKER KIRK KEYS FURNISHED WITH GEAR. KIRK KEYS SHALL BE INSTALLED SO ONLY ONE GENERATOR OR MAINTENANCE BYPASS CABINET LOAD BANK BREAKER CAN BE CLOSED AT A SINGLE TIME.
E114	DISCONNECT AND VFD PROVIDED WITH EQUIPMENT BY MANUFACTURER.
E118	DISCONNECT PROVIDED WITH EQUIPMENT BY MANUFACTURER.
E121	480V/30A FUSED AT 25AIN1
E126	LOAD BANK CAM LOCK CONNECTIONS PROVIDED WITH SWITCHGEAR AND FACTORY WIRED BY MANUFACTURER.
E127	PROVIDE 24V CONNECTION TO METER FROM BMP PANEL. PROVDE CABLING AND CONDUIT AS REQUIRED.
E157	PROVIDE PLC INTERLOCK CABLING BETWEEN BREAKER TRANSFER PAIRS AS REQUIRED. PROVIDE 24V CONNECTION TO PLC CONTROLLER FROM BMP PANEL LOCATED IN UPS ELECTRICAL ROOM. PROVIDE CABLING AND CONDUIT AS REQUIRED.

BCEI BURR COMPUTER ENVIRONMENTS, INC.
MEP ENGINEERS
10400 RODGERS ROAD | HOUSTON, TX 77070
281.374.8644

Gensler
CONSULTING ARCHITECTS
999 PEACHTREE ST NE | SUITE 1400 | ATLANTA, GA 30309
404.507.1000

Kimley»Horn
CONSULTING STRUCTURAL ENGINEERS
11720 AMBER PARK DRIVE | SUITE 600 | ALPHARETTA, GA 30009
770.619.7280

Kimley»Horn
CONSULTING CIVIL ENGINEERS
1200 PEACHTREE ST NE | SUITE 800 | ATLANTA, GA 30309
404.419.8700

edgeconnex®

ATL11

ADDRESS
4850 STONEWALL TELL RD
UNION CITY, GA 30349

ISSUES & REVISIONS

NO	DATE	DESCRIPTION
1	06.21.2024	ISSUE FOR PERMIT
2	07.24.2024	CITY COMMENTS
3	09.06.2024	ADDENDUM 01

SEAL

Ms.PE051907 PROFESSIONAL ENGINEER DOUG ASG CARGER
9-6-24
Exp: 12-31-24

ELECTRICAL ONE-LINE DIAGRAM - PP2B - BLOCK F

DRAWN: LJS
REVIEWED: DGC
PROJECT NO: C2370

SHEET NO.
E0PBF01

PROPRIETARY: NOT FOR DISCLOSURE OR USE WITHOUT THE WRITTEN CONSENT OF BURR COMPUTER ENVIRONMENTS, INC.

© BURR COMPUTER ENVIRONMENTS, INC.
9/6/2024 9:24:15 AM
Autodesk Docs://2370-EDGAT1/1102370-EDGAT1-1102370-EDGAT1-1-07_2MW-ELEC-OTHER_R23.rvt

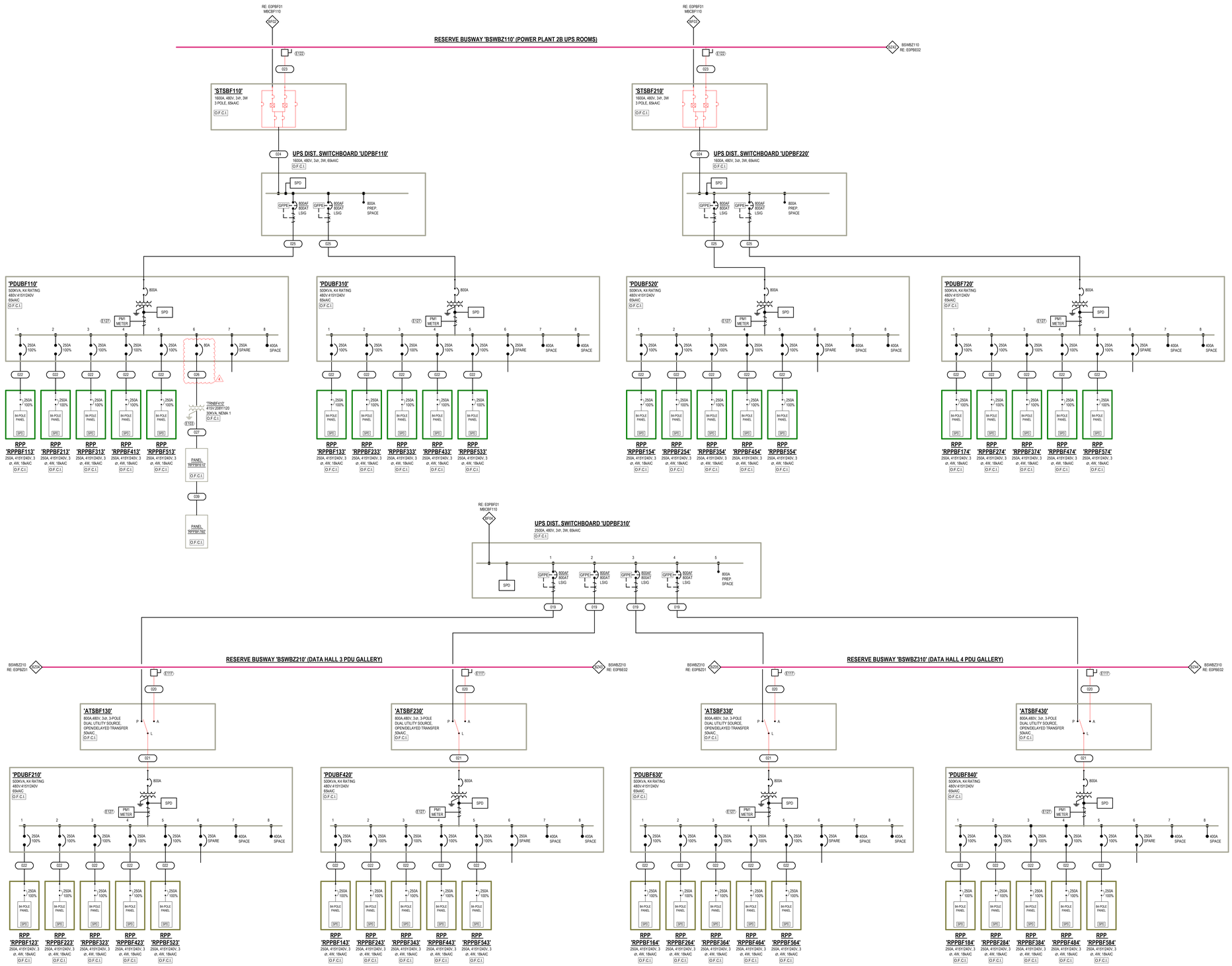

ONE-LINE GENERAL NOTES:

1. REFER TO GENERAL ELECTRICAL NOTES, SYMBOLS, AND ABBREVIATIONS SHEET E000001 FOR ALL SYMBOLS ON THIS SHEET.
2. REFER TO BOOK SPECS FOR ELECTRICAL SPECIFICATIONS.
3. REFER TO E600000 SERIES SHEETS FOR FEEDER SCHEDULES, LOAD ANALYSES, AND FAULT CURRENT SCHEDULES.
4. PHASE ROTATION SHALL BE A-B-C CLOCKWISE THROUGHOUT SYSTEM.
5. POWER QUALITY METER "PM1" INDICATES SCHNEIDER ELECTRIC PM8000 SERIES. POWER QUALITY METER "PM2" INDICATES SCHNEIDER ELECTRIC PM8000 SERIES.

LINETYPE LEGEND

NEW EQUIPMENT/FEEDERS	
FUTURE EQUIPMENT/FEEDERS	
EQUIPMENT/FEEDERS BY OTHERS	

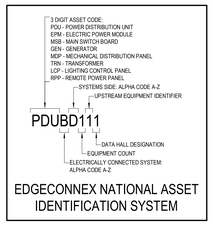

EDGECONNEX NATIONAL ASSET IDENTIFICATION SYSTEM

KEYED NOTES:

E103	REFER TO GROUNDING ONE-LINE DIAGRAMS SHEET SERIES E0EXXXX FOR ADDITIONAL INFORMATION.
E117	PROVIDE BUSWAY TAP SAME MANUFACTURER AS BUSWAY. TAP SHALL INCLUDE 800A/3P BREAKER AND MATCH BUSWAY IAC RATING.
E122	PROVIDE BUSWAY TAP BY SAME MANUFACTURER AS BUSWAY. TAP SHALL INCLUDE 1600A/3P BREAKER.
E127	PROVIDE 24V CONNECTION TO METER FROM BMP PANEL. PROVIDE CABLING AND CONDUIT AS REQUIRED.

BCEI
BURR COMPUTER ENVIRONMENTS, INC.
MEP ENGINEERS
10400 RODGERS ROAD | HOUSTON, TX 77070
281.374.8644

Gensler
CONSULTING ARCHITECTS
999 PEACHTREE ST NE | SUITE 1400 | ATLANTA, GA 30309
404.507.1000

Kimley»Horn
CONSULTING STRUCTURAL ENGINEERS
11720 AMBER PARK DRIVE | SUITE 600 | ALPHARETTA, GA 30009
770.619.7280

Kimley»Horn
CONSULTING CIVIL ENGINEERS
1200 PEACHTREE ST NE | SUITE 800 | ATLANTA, GA 30309
404.419.8700

edgeconnex®

ATL11

ADDRESS
4850 STONEWALL TELL RD
UNION CITY, GA 30349

ISSUES & REVISIONS

NO	DATE	DESCRIPTION
1	06.21.2024	ISSUE FOR PERMIT
2	07.24.2024	CITY COMMENTS
3	09.06.2024	ADDENDUM 01
4	01.21.2025	ADDENDUM 02

SEAL

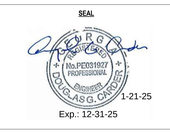

Exp.: 12-31-25

ELECTRICAL ONE-LINE DIAGRAM - PP2B - BLOCK F

DRAWN: LJS
REVIEWED: DGC
PROJECT NO: C2370

SHEET NO.
E0PBF02

PROPRIETARY: NOT FOR DISCLOSURE OR USE WITHOUT THE WRITTEN CONSENT OF BURR COMPUTER ENVIRONMENTS, INC.

1 ELECTRICAL PARTIAL ONE-LINE DIAGRAM - PP2B - BLOCK F
SCALE: NOT TO SCALE

© BURR COMPUTER ENVIRONMENTS, INC.
1/30/2025 6:38:17 PM
Autodesk Docs://2370-EDGAT1/2370-EDGAT1/E0PBF02-EDGAT1-1-0P_2MW-ELEC-OTHER_R23.rvt

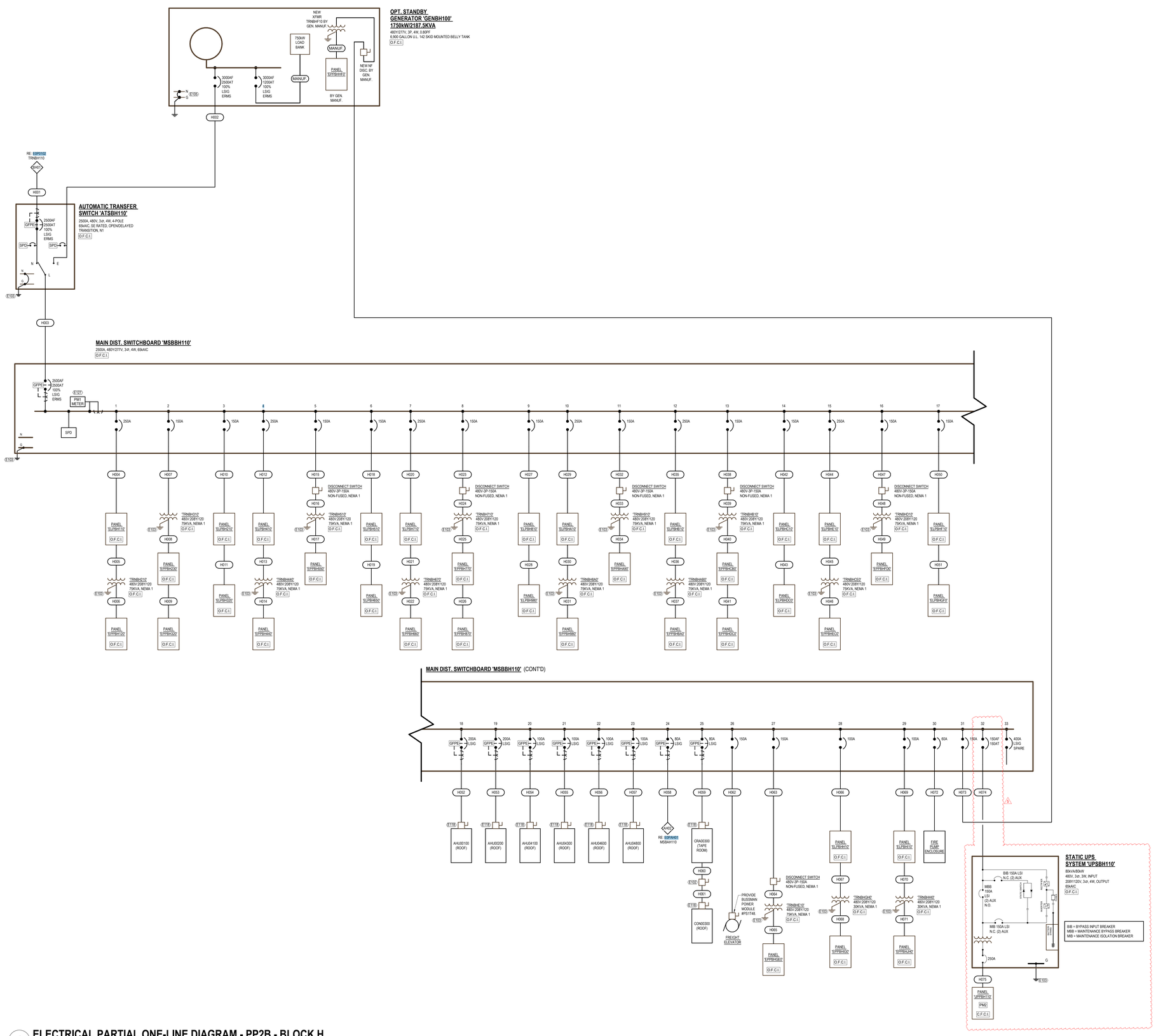

1 **ELECTRICAL PARTIAL ONE-LINE DIAGRAM - PP2B - BLOCK H**

SCALE: NOT TO SCALE

ONE-LINE GENERAL NOTES:

1. REFER TO GENERAL ELECTRICAL NOTES, SYMBOLS, AND ABBREVIATIONS SHEET E000001 FOR ALL SYMBOLS ON THIS SHEET.
2. REFER TO BOOK SPECS FOR ELECTRICAL SPECIFICATIONS.
3. REFER TO E600000 SERIES SHEETS FOR FEEDER SCHEDULES, LOAD ANALYSES, AND FAULT CURRENT SCHEDULES.
4. PHASE ROTATION SHALL BE A-B-C CLOCKWISE THROUGHOUT SYSTEM.
5. POWER QUALITY METER "PM1" INDICATES SCHNEIDER ELECTRIC PM8000 SERIES. POWER QUALITY METER "PM2" INDICATES SCHNEIDER ELECTRIC PM5000 SERIES.

LINETYPE LEGEND

NEW EQUIPMENT/FEEDERS
FUTURE EQUIPMENT/FEEDERS
EQUIPMENT/FEEDERS BY OTHERS

3 DIGIT ASSET CODE:
PDU - POWER DISTRIBUTION UNIT
EPM - ELECTRIC POWER MODULE
MSB - MAIN SWITCH BOARD
GEN - GENERATOR
MDP - MECHANICAL DISTRIBUTION PANEL
TRN - TRANSFORMER
LCP - LIGHTING CONTROL PANEL
RPP - REMOTE POWER PANEL
SYSTEMS SIDE: ALPHA CODE A-Z
UPSTREAM EQUIPMENT IDENTIFIER

PDUBD111

DATA HALL DESIGNATION
EQUIPMENT COUNT
ELECTRICALLY CONNECTED SYSTEM: ALPHA CODE A-Z

EDGECONNEX NATIONAL ASSET IDENTIFICATION SYSTEM

KEYED NOTES:

E102 PROVIDE 30A, NON-FUSED DISCONNECT SWITCH IN NEMA-3R ENCLOSURE. INSTALL DISCONNECT SWITCH ON ROOF ADJACENT TO EQUIPMENT AS REQUIRED.

E103 REFER TO GROUNDING ONE-LINE DIAGRAMS SHEET SERIES E0EXXXX FOR ADDITIONAL INFORMATION.

E105 GENERATOR TO BE WIRED AS A SEPARATELY DERIVED SYSTEM. BOND THE GENERATOR NEUTRAL AT THE GENERATOR. REFER TO DETAIL E0SB0001 FOR MORE INFORMATION.

E118 DISCONNECT PROVIDED WITH EQUIPMENT BY MANUFACTURER.

E127 PROVIDE 24V CONNECTION TO METER FROM BMP PANEL. PROVIDE CABLING AND CONDUIT AS REQUIRED.

BCEI
BURR COMPUTER ENVIRONMENTS, INC.
MEP ENGINEERS
10400 RODGERS ROAD | HOUSTON, TX 77070
281.374.8644

Gensler
CONSULTING ARCHITECTS
999 PEACHTREE ST NE | SUITE 1400 | ATLANTA, GA 30309
404.507.1000

Kimley»Horn
CONSULTING STRUCTURAL ENGINEERS
11720 AMBER PARK DRIVE | SUITE 600 | ALPHARETTA, GA 30009
770.619.7280

Kimley»Horn
CONSULTING CIVIL ENGINEERS
1200 PEACHTREE ST NE | SUITE 800 | ATLANTA, GA 30309
404.419.8700

edgeconnex®

ATL11

ADDRESS
4850 STONEWALL TELL RD
UNION CITY, GA 30349

ISSUES & REVISIONS

NO	DATE	DESCRIPTION
1	06.21.2024	ISSUE FOR PERMIT
2	07.24.2024	CITY COMMENTS
3	09.06.2024	ADDENDUM 01
4	01.21.2025	ADDENDUM 02
5	05.30.2025	ADDENDUM 03

SEAL

Ma.PE031997 PROFESSIONAL ENGINEER

5-30-25

Exp.: 12-31-25

ELECTRICAL ONE-LINE DIAGRAM - PP2B - BLOCK H

DRAWN: LJS
REVIEWED: DGC
PROJECT NO: C2370

SHEET NO.
E0PBH01

PROPRIETARY: NOT FOR DISCLOSURE OR USE WITHOUT THE WRITTEN CONSENT OF BURR COMPUTER ENVIRONMENTS, INC.

© BURR COMPUTER ENVIRONMENTS, INC.
6/11/2025 8:39:00 AM
Filename: Block-H\E0PB-ECA-A11-H\E0PB-ECA-A11-H\E0PB-ECA-A11-H1.dgn JAHN-ELEC-OTHER_R2014

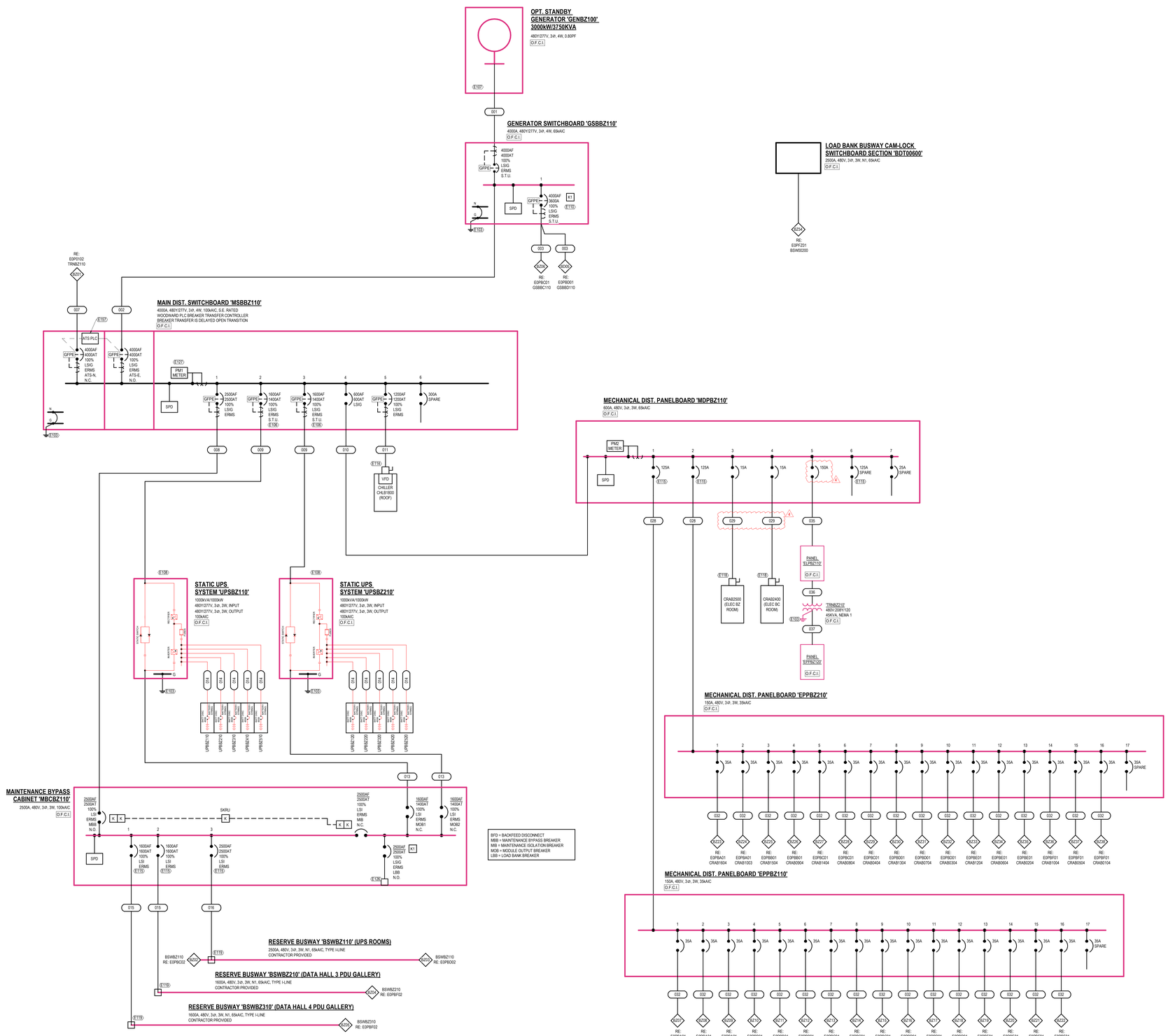

1 **ELECTRICAL PARTIAL ONE-LINE DIAGRAM - PP2B - BLOCK Z (CATCHER)**
SCALE: NOT TO SCALE

ONE-LINE GENERAL NOTES:

1. REFER TO GENERAL ELECTRICAL NOTES, SYMBOLS, AND ABBREVIATIONS SHEET E000001 FOR ALL SYMBOLS ON THIS SHEET.
2. REFER TO BOOK SPECS FOR ELECTRICAL SPECIFICATIONS.
3. REFER TO E600000 SERIES SHEETS FOR FEEDER SCHEDULES, LOAD ANALYSES, AND FAULT CURRENT SCHEDULES.
4. PHASE ROTATION SHALL BE A-B-C CLOCKWISE THROUGHOUT SYSTEM.
5. POWER QUALITY METER "PM1" INDICATES SCHNEIDER ELECTRIC PM8000 SERIES. POWER QUALITY METER "PM0" INDICATES SCHNEIDER ELECTRIC PM6000 SERIES.

LINETYPE LEGEND

NEW EQUIPMENT/FEEDERS
FUTURE EQUIPMENT/FEEDERS
EQUIPMENT/FEEDERS BY OTHERS

3 DIGIT ASSET CODE:
PDU - POWER DISTRIBUTION UNIT
EPM - ELECTRIC POWER MODULE
MSB - MAIN SWITCH BOARD
GEN - GENERATOR
MDP - MECHANICAL DISTRIBUTION PANEL
TRN - TRANSFORMER
LCP - LIGHTING CONTROL PANEL
RPP - REMOTE POWER PANEL
SYSTEMS SIDE: ALPHA CODE A-Z
UPSTREAM EQUIPMENT IDENTIFIER

PDUBD111

DATA HALL DESIGNATION
EQUIPMENT COUNT
ELECTRICALLY CONNECTED SYSTEM: ALPHA CODE A-Z

EDGECONNEX NATIONAL ASSET IDENTIFICATION SYSTEM

KEYED NOTES:

E103 REFER TO GROUNDING ONE-LINE DIAGRAMS SHEET SERIES E0EXXXX FOR ADDITIONAL INFORMATION.

E106 PROVIDE 120V CONNECTION FROM UPS TO SHUNT-TRIP BREAKER.

E107 PROVIDE GENERATOR START CONTROL WIRING PER DETAIL 1E500004.

E108 PROVIDE UPS INTERCONNECT CONTROL WIRING PER DETAIL 1E500004.

E110 GENERATOR AND MAINTENANCE BYPASS CABINET LOAD BANK BREAKER KIRK KEYS FURNISHED WITH GEAR. KIRK KEYS SHALL BE INSTALLED SO ONLY ONE GENERATOR OR MAINTENANCE BYPASS CABINET LOAD BANK BREAKER CAN BE CLOSED AT A SINGLE TIME.

E114 DISCONNECT AND VFD PROVIDED WITH EQUIPMENT BY MANUFACTURER.

E115 PROVIDE BREAKER WITH ELECTRONIC TRIP COMMUNICATION MODULE.

E118 DISCONNECT PROVIDED WITH EQUIPMENT BY MANUFACTURER.

E119 END OR CENTER FEED CABLE CONNECTION BOX. TYPICAL WHERE SHOWN AT BUSWAY.

E126 LOAD BANK CAM LOCK CONNECTIONS PROVIDED WITH SWITCHGEAR AND FACTORY WIRED BY MANUFACTURER.

E127 PROVIDE 24V CONNECTION TO METER FROM BMP PANEL. PROVIDE CABLING AND CONDUIT AS REQUIRED.

E157 PROVIDE PLC INTERLOCK CABLING BETWEEN BREAKER TRANSFER PAIRS AS REQUIRED. PROVIDE 24V CONNECTION TO PLC CONTROLLER FROM BMP PANEL LOCATED IN UPS ELECTRICAL ROOM. PROVIDE CABLING AND CONDUIT AS REQUIRED.

BCEI BURR COMPUTER ENVIRONMENTS, INC.
MEP ENGINEERS
10400 RODGERS ROAD | HOUSTON, TX 77070
281.374.8644

Gensler
CONSULTING ARCHITECTS
999 PEACHTREE ST NE | SUITE 1400 | ATLANTA, GA 30309
404.507.1000

Kimley»Horn
CONSULTING STRUCTURAL ENGINEERS
11720 AMBER PARK DRIVE | SUITE 600 | ALPHARETTA, GA 30009
770.619.7280

Kimley»Horn
CONSULTING CIVIL ENGINEERS
1200 PEACHTREE ST NE | SUITE 800 | ATLANTA, GA 30309
404.419.8700

edgeconnex®
ATL11
ADDRESS
4850 STONEWALL TELL RD
UNION CITY, GA 30349

ISSUES & REVISIONS

NO	DATE	DESCRIPTION
1	06.21.2024	ISSUE FOR PERMIT
2	07.24.2024	CITY COMMENTS
3	09.06.2024	ADDENDUM 01
4	01.21.2025	ADDENDUM 02

SEAL
Ms.PE031937
PROFESSIONAL
DGC-ASG, CANADA
1-21-25
Exp.: 12-31-25

ELECTRICAL ONE-LINE DIAGRAM - PP2B - BLOCK Z

DRAWN: LJS
REVIEWED: DGC
PROJECT NO: C2370

SHEET NO.
E0PBZ01

PROPRIETARY: NOT FOR DISCLOSURE OR USE WITHOUT THE WRITTEN CONSENT OF BURR COMPUTER ENVIRONMENTS, INC.

© BURR COMPUTER ENVIRONMENTS, INC.
1/20/2025 8:28:22 PM
Autodesk Docs://2370-EDGA-ATL11/C2370-EDGA-ATL11-C2370/E0EXAR1L1-AT_2MW-ELEC-OTHER_R23.rvt