PFAFF 260+360

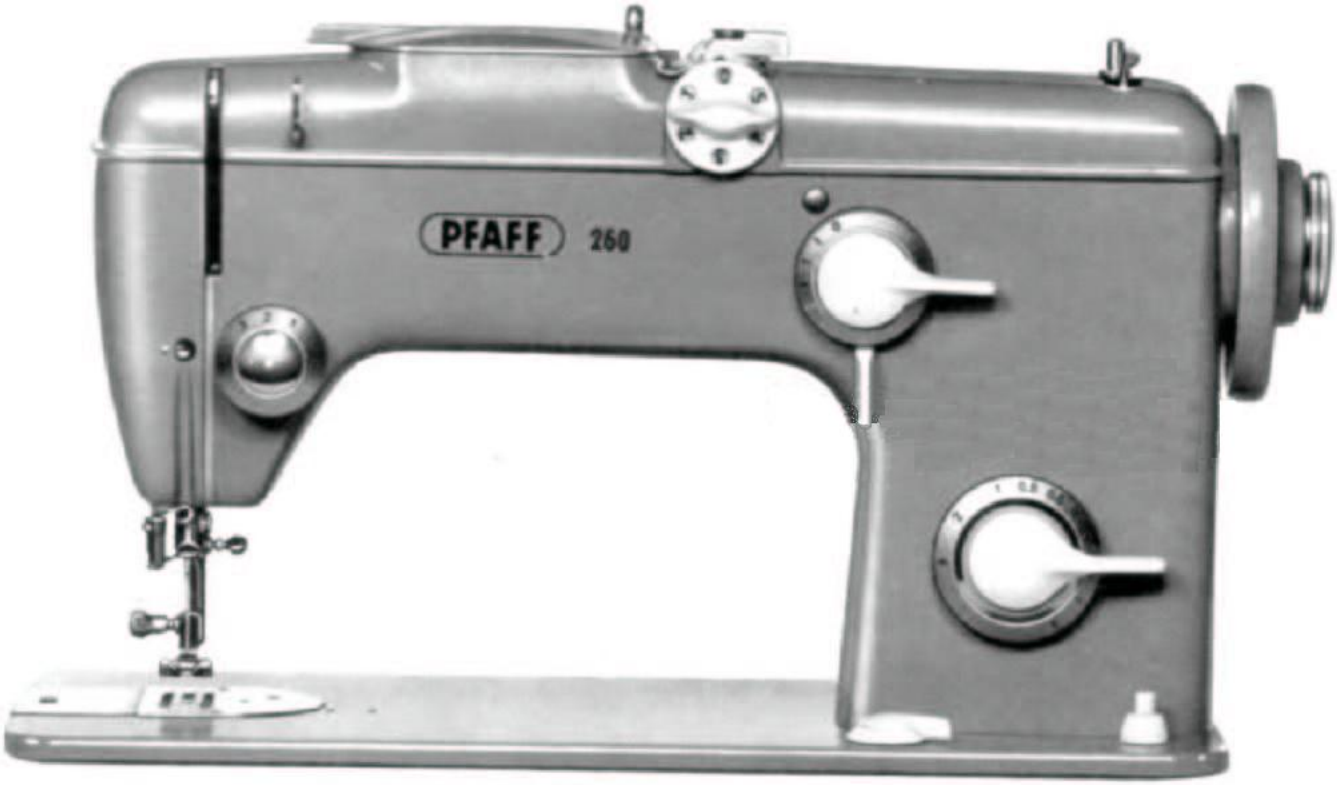

Service Manual

Functions of Assemblies · Adjustment Procedures
Sewing-off · Trouble Shooting · Electrical Equipment

Downloaded from www.Manualslib.com manuals search engine

SERVICE MANUAL

for Pfaff Sewing Machines 260 and 360
with built-in automatic
embroidery mechanism

Functions of Assemblies
Electrical Equipment
Adjustment Procedures
Sewing-off
Trouble Shooting

G·M·PFAFF AG · KARLSRUHE-DURLACH BRANCH

Downloaded from www.Manualslib.com manuals search engine

Blank Page

Downloaded from www.Manualslib.com manuals search engine

Foreword

This profusely illustrated Service Manual for Pfaff 260 (360) - 261 sewing machines is a valuable source of technical information which is primarily intended for Pfaff dealers and their service personnel.

It goes into greater detail and, thus, complements the instruction book which accompanies each machine. The nomenclature used in the pertinent spare parts catalogue has also been used throughout this book. Numerous photographs and drawings are interspersed in the text in order to give users a good idea of the assemblies being discussed.

Beginning with a general description of the workings of a sewing machine, the manual proceeds to discuss how the zigzag and automatic mechanisms function. The adjustment procedures which follow are intended for those of our dealers who have to remedy sewing troubles that may occur occasionally.

The prime object of this manual is, however, to impart additional technical knowledge to all who are connected with the sale and repair of the Pfaff 260 (360) - 261 and to enable them to render satisfactory service.

G. M. PFAFF AG

Downloaded from www.Manualslib.com manuals search engine

CONTENTS

	Page
Foreword	
How a Sewing Machine Functions	7
The Needle	7
The Sewing Hook	8
Stitch Formation and Feed Motion	11
The Take-Up Lever	12
The Feed Dog	12
Dropping the Feed Dog	13
Stitch Length Regulation	13
Reverse Sewing	14
Regulating the Thread Tension	15
The Bobbin Thread Tension	15
Regulating the Thread Tension	15
The Needle Thread Tension	16
Winding the Bobbin	17
Inserting the Bobbin Case	17
Needle and Thread Chart	18
Threading the Needle	19
Zigzag Sewing	20
The Zigzag Mechanism	20
The Finger-Tip Control	21
Changing the Needle Position	21
Mechanical Principle of Automatic Machines	22
Mechanical Principle of the Pfaff -261 Automatic	23
The Electrical Equipment	29
Suppression of Radio and TV Interference	31
The Lighting System	32
The Electric Drive	33
Multi-Voltage Motors for Pfaff 260 and 360 Machines	35
Maintenance	36
Storing Sewing Heads and Cabinets	36
Checking Cabinets and Stands	37
Attaching the Bedplate Extension	37
Mounting the Sewing Head	37
Removing the Rust-Preventative Fluid	38
Cleaning and Oiling	38
Removing the Top Cover	38
Cleaning the Feed Dog and the Sewing Hook	39
Removing and Replacing the Face Cover	39
The Needle Threader	42
Stitching off the Machine	42
Checking the Automatic Mechanism	43
Regulating the Pressure on the Material	43
Threading the Machine for Two-Needle Work	44
Preparing the Machine for Two-Needle Decorative Sewing	44
Rules Your Customers Should Know	45
Adjustment Procedures	46
The Feed Eccentric	46

Downloaded from www.Manualslib.com manuals search engine

Page

The Upper Driving Belt Sprocket 46
The Needle Vibrating Eccentric Bevel Gear 47
The Driving Eccentric for the Automatic Mechanism 48
Timing the Sewing Hook 48
Pfaff 260 – Needle Bar Rise 49
The Upper Driving Belt Sprocket 50
Pfaff 360 – Needle Bar Rise 51
Exchanging the Sewing Hook in the Pfaff 360 52
The Position Finger Bracket 52
Setting the Needle Bar at Correct Height 53
Adjusting the Feed Dog in the Feed Slot 53
Setting the Presser Bar and the Feed Dog at Correct Height 55
Dismantling, Replacing and Adjusting the Stitch Length Control 56
Adjusting the Bobbin Winder 57
Setting the Needle Threader 58
Changing the Thread Check Spring 60
Changing the Cord Belt 61
Assembling and Adjusting the Zigzag Regulator Mechanism 63
The Zigzag Regulator Mechanism 64
Stripping the Automatic Mechanism 64
Dismantling the Stitch Width Control 64
The Stitch Width Regulating Mechanism in the Machine Arm 64
The Stitch Width Control 65
Adjusting the Stitch Width Control 66
Rough Adjustment of Zigzag Stitch 67
Fine Adjustment of Zigzag Stitch 67
Zeroing the Needle for Straight Stitching 67
Adjusting the Needle Position 68
Centering the Needle in the Needle Plate Slot 69
Converting a Pfaff 260 (360) into a Pfaff 260-261 (360-261) 71
Installing the Automatic Mechanism 71
Mounting the Engaging Levers 71
Essential Parts of the Pfaff (-261) Automatic 73
Mounting the Pressure Spring Assembly 75
Adjusting the Engaging Levers 75
Replacing the Top Cover 76
Checking the Needle Position in Relation to the Needle Plate Slot . . . 76
Testing the Performance of the Automatic Mechanism 77
Checking the Operation of the Engaging Levers 77
Eliminating Troubles in Automatic Sewing 77
Installing a PE 260 or 261 Motor into the Pfaff 260 (-261) 79
Changing the Motor Belt 81
Trouble Shooting 81
Dismantling and Reassembling the Pfaff Hook 84
Works of the Pfaff 260-261 85
The Two-Position Presser Bar Lifter 86
The Pfaff Tool Kit 86
Abridged Adjustment Procedure for the Zigzag Regulator Mechanism of Pfaff 260 (360) Machines 87

Downloaded from www.Manualslib.com manuals search engine

Blank Page

Downloaded from www.Manualslib.com manuals search engine

How a Sewing Machine Functions

Household sewing machines all make the conventional lockstitch. This type of stitch consists of an upper (needle) and a lower (bobbin) thread locked together in the material being stitched. The lock of threads is pulled to the middle of the fabric so that the seam has the same appearance top and bottom.

Every sewing machine designed to produce this type of stitch must have the following component parts and assemblies:

1. a needle
2. a sewing hook, complete with bobbin case and bobbin (typical of any lockstitch sewing machine)
3. a take-up lever
4. an upper and a lower tension mechanism
5. a feed dog
6. Stitch forming and feeding mechanisms
7. a bobbin winder.

The Needle

In contrast to the hand sewing needle, the machine sewing needle has the eye near its tip. It penetrates the material at every stitch, carrying the thread down through the hole it has made in the fabric. As it rises after reaching the lowest point of its stroke, the thread bulges out on the short-groove side of the needle to form a loop above its eye. This loop is entered at the correct time by the point of the shuttle or sewing hook (Figs. 1 & 2).

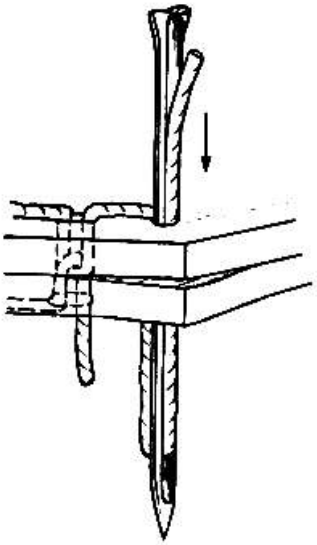

Fig. 1

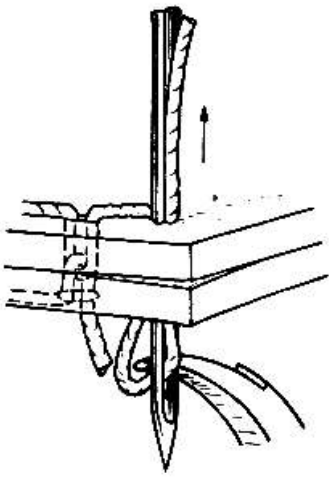

Fig. 2

Sewing machine needles are available in many different varieties and sizes, and are classified into several groups, or systems.

Downloaded from www.Manualslib.com manuals search engine

Needle System 130 R

(Needle size, e. g. No. 80, 90 or 100, given in hundredths of millimeters)

F = Flat side of shank
L = Length of needle
St = Needle size (shaft diameter)
l = Long groove
k = Short groove
H = Scarf (clearance cut)
S = Point
Ö = Eye

Fig. 3

Fig. 4

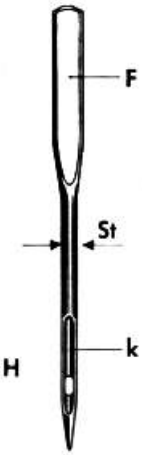

Fig. 5

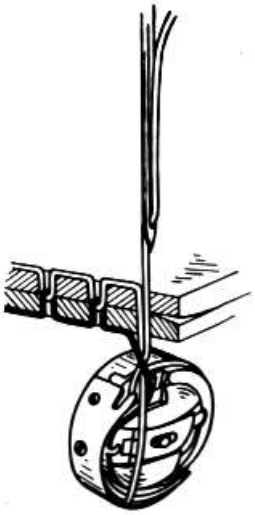

Fig. 6

Pfaff domestic sewing machines normally use System 130 R needles with flat shank and scarf (Fig. 4). System 130 B round-shank needles are used for cording and two-needle fancy stitching. Make sure you use only "ORIGINAL PFAFF" needles (see also page 81).

Needle sizes are determined by the shaft diameter (St in Fig. 5) and are measured in hundredths of millimeters. A No. 100 needle, for example, has a blade diameter of $^{100}/_{100}$, or one, millimeter.

Opposite the flat side of the shank, a long groove extends all the way down to the needle eye. On Pfaff zigzag and automatic sewing machines, this groove must face toward the operator always. The scarf, or clearance cut, marked H in Fig. 4 then faces toward the sewing hook.

The correct relationship between needle and thread size may be seen from the Needle and Thread Chart on page 18.

The Sewing Hook

The functions of the sewing hook are (1) to enter with its point the needle thread loop which forms at the needle eye as the needle ascends, (2) to enlarge this loop, and (3) to pass it around the stationary bobbin case (Fig. 6).

There are different types of loop takers, the most popular of which are:

a. Shuttles that move in a race and are driven by a shuttle driver, such as the central-bobbin, or oscillating, shuttle depicted in Fig. 7, and

b. Sewing hooks which are carried on a shaft and revolve freely.

Downloaded from www.Manualslib.com manuals search engine

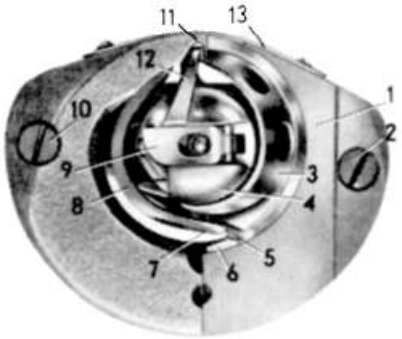

Fig. 7 Oscillating shuttle

1 = Shuttle race (cut-away view) 4 = Bobbin case
3 = Shuttle 8 = Shuttle driver

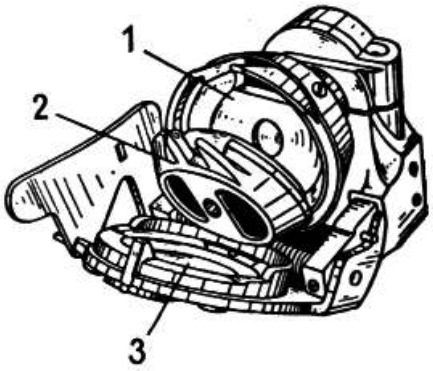

Fig. 8 Rotary hook with floating bobbin case

1 = Rotary hook 2 = Bobbin case
3 = Retainer

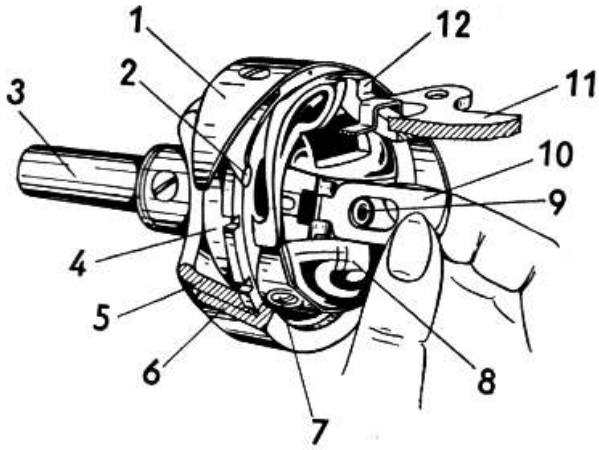

Fig. 9 Rotary hook with stationary bobbin case

1 = Hook gib
2 = Hook point
3 = Hook shaft
4 = Bobbin case base
5 = Sewing hook
8 = Bobbin case cap
9 = Center stud
10 = Bobbin case latch
11 = Bobbin case position finger bracket
12 = Bobbin case position finger

The rotary sewing hooks mentioned under b. above are incorporated in modern sewing machines in two varieties, known as:

a. The rotary hook with floating bobbin case. This type of sewing hook, as the name implies, features a bobbin case which floats in the hook bowl and is kept from falling out by a retainer (Fig. 8).

b. The rotary hook with stationary bobbin case. The bobbin case of this type hook features a ring-shaped flange which runs in an annular groove, or raceway, cut into the hook bowl. It is held in place by a hook gib so that it cannot fall out while sewing. The bobbin case cap is pushed on the center stud in the bobbin case base (Fig. 9).

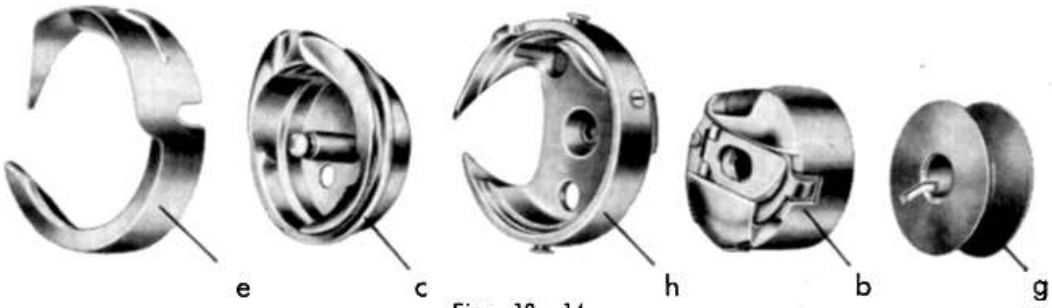

Figs. 10 – 14

Downloaded from www.Manualslib.com manuals search engine

The loop taker used in Pfaff 260 (360) - 261 domestic sewing machines is the type of sewing hook described under b. above. It is a sewing hook of Pfaff's own design which is rated as jam-proof. Mounted on a horizontal shaft, this new Pfaff hook (Fig. 15) is set transverse to the direction of feed and moves counter-clockwise, making two revolutions for each stitch. In other words, a stitch is formed only at every other revolution of the sewing hook, which is a favorable ratio for the take-up lever motion.

Fig. 15 Pfaff rotary hook

a = Position slot
b = Bobbin case base
c = Bobbin
d = Bobbin case latch
e = Bobbin case cap
f = Sewing hook
g = Hook point
h = Hook thread guard

Fig. 16 Works of the Pfaff 260-261

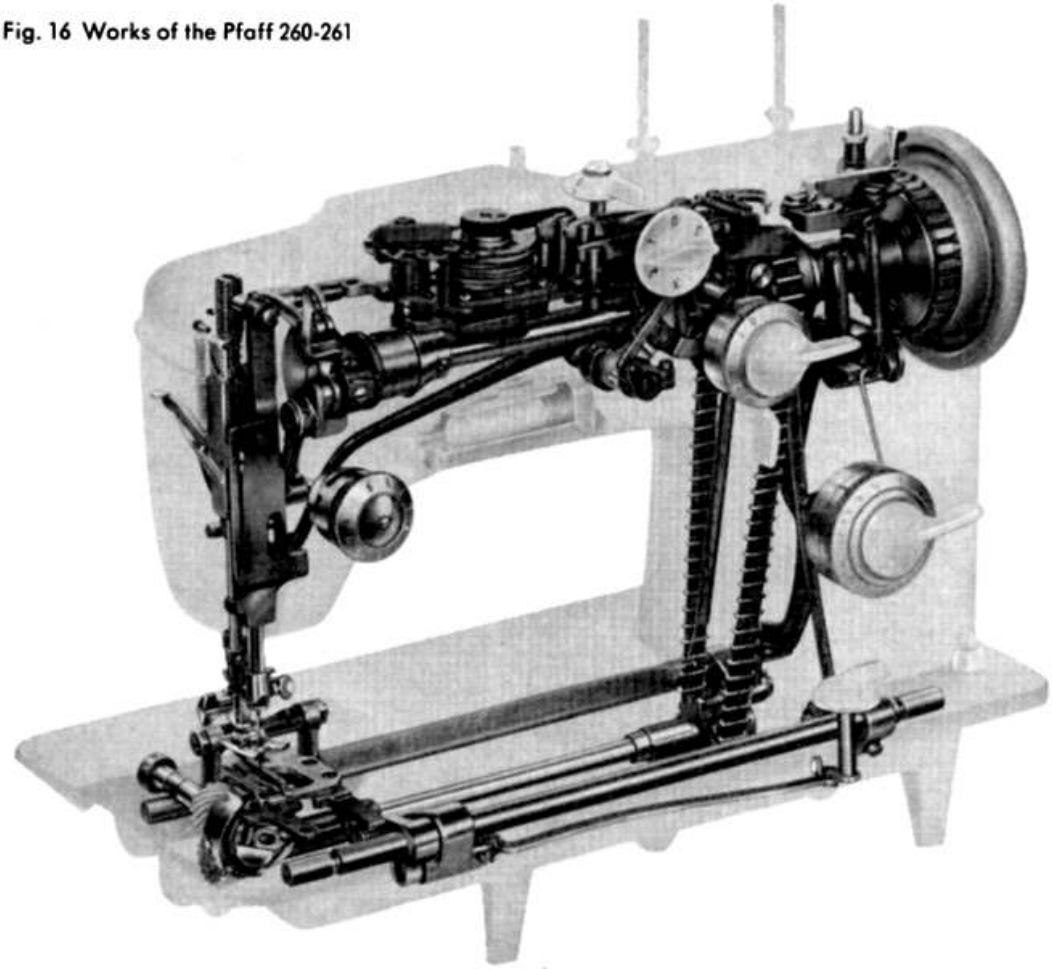

Downloaded from www.Manualslib.com manuals search engine

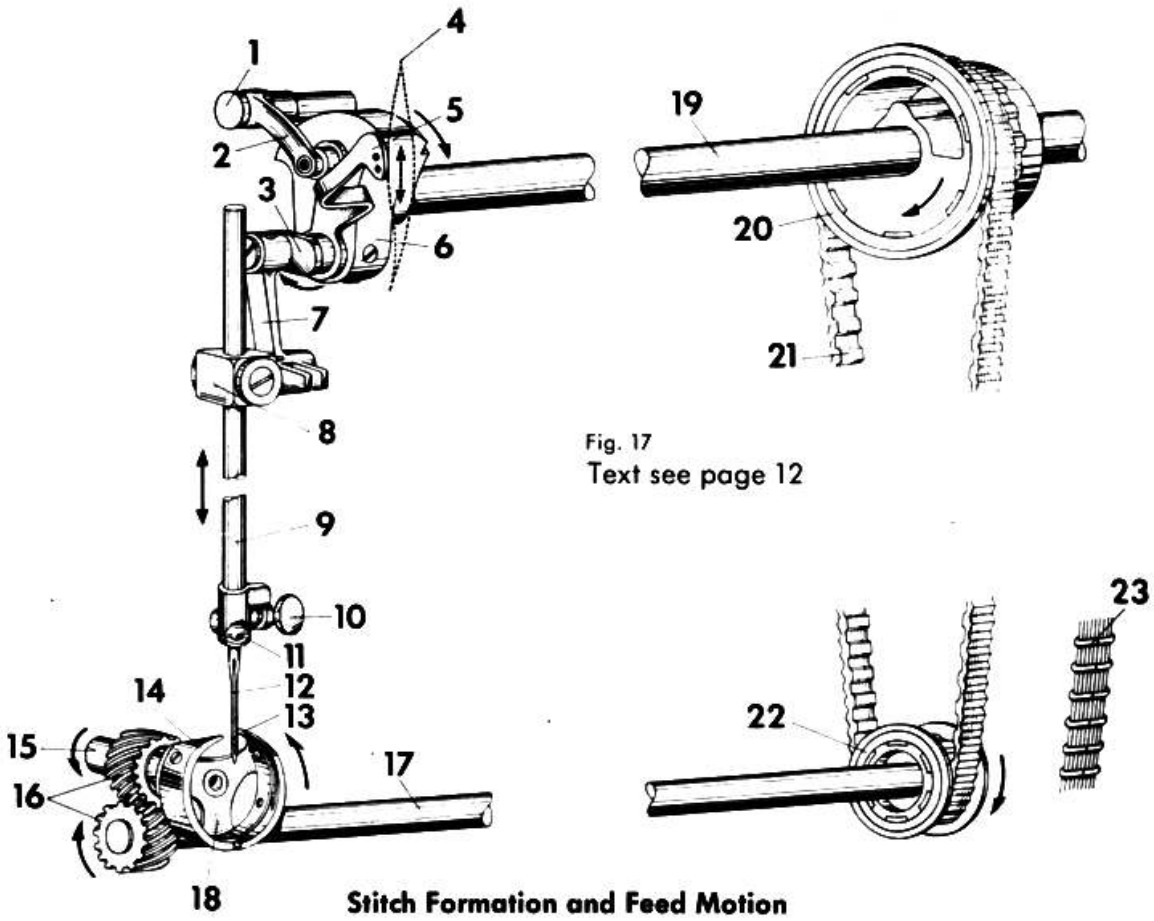

Fig. 17
Text see page 12

Stitch Formation and Feed Motion

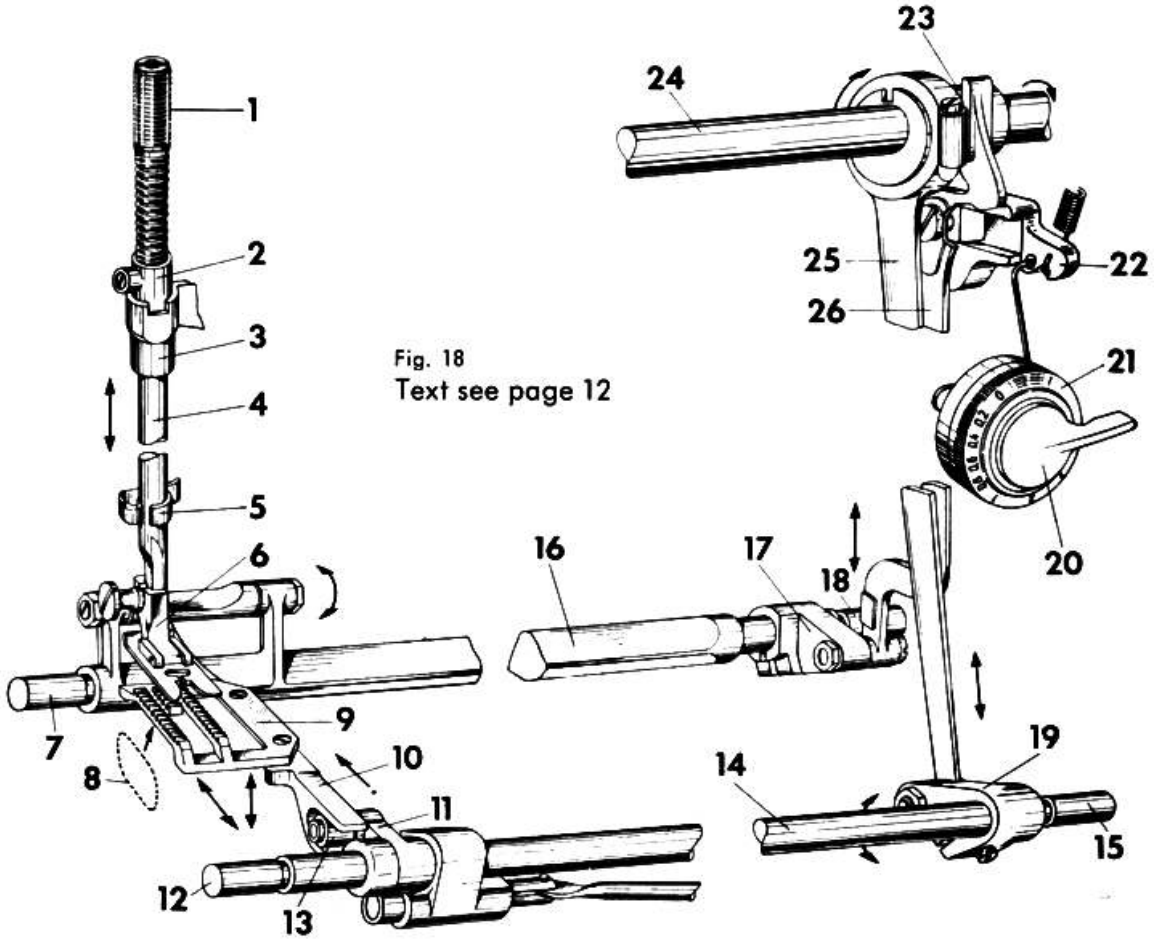

Fig. 18
Text see page 12

Downloaded from www.Manualslib.com manuals search engine

Stitch Formation

1 Hinge stud
2 Take-up lever link
3 Take-up crank
4 Motion pattern of the take-up lever
5 Link take-up lever
6 Needle bar crank
7 Needle bar connecting link
8 Needle bar connecting stud
9 Needle bar
10 Needle set screw
11 Needle holder
12 Needle
13 Hook point
14 Hook thread guard
15 Hook shaft
16 Hook drive shaft helical gears
17 Hook drive shaft
18 Rotary hook
19 Arm shaft
20 Driving belt sprocket, upper
21 Driving belt (Synchroflex)
22 Driving belt sprocket, lower
23 Driving belt (cord)

Note: The needle plate has been omitted in order to give a better view.

Feed Motion

1 Pressure regulating screw
2 Presser bar guide collar
3 Presser bar lifting bracket
4 Presser bar
5 Thread cutter
6 Sewing foot
7 Center stud
8 Feed motion diagram
9 Feed dog
10 Feed bar
11 Feed lifting shaft crank, front
12 Center stud
13 Roller
14 Feed lifting shaft
15 Center stud
16 Feed rock shaft
17 Feed rock shaft crank
18 Center stud
19 Feed lifting shaft crank, rear
20 Finger-tip control H
21 Stitch length dial G
22 Feed regulator
23 Feed eccentric
24 Arm shaft
25 Feed lifting connection
26 Feed forked connection

The Take-Up Lever

The function of the take-up is to provide the correct amount of thread required to enlarge the loop, and to draw back the excess thread after the loop has passed around the bobbin case. As it approaches the highest point of its stroke, the take-up lever, assisted by the advancing feed dog, pulls the stitch tight and at the same time draws additional thread through the upper tension for the next stitch.

All Pfaff domestic sewing machines are equipped with the long-valued link take-up (Fig. 17).

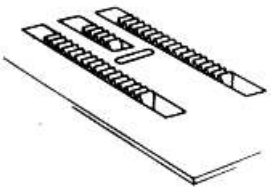

Fig. 19 Feed dog in operative position

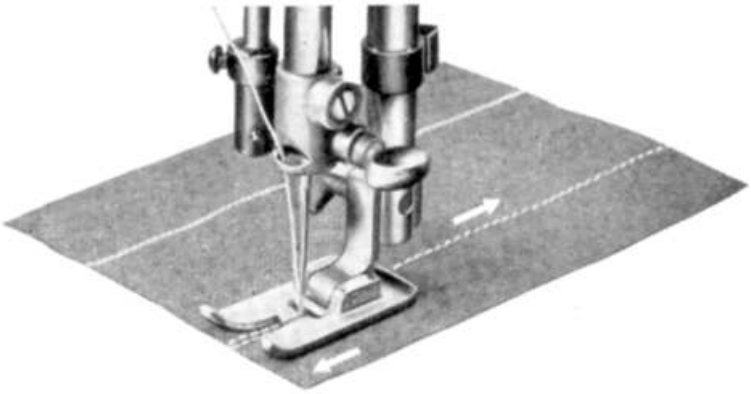

Fig. 20 Sewing forward and reverse

The Feed Dog

The principal function of the feed dog is to move the material forward or backward in accordance with the stitch length set. Reverse feeding is used to backtack the end of a seam.

Downloaded from www.Manualslib.com manuals search engine

Depending on the type of work the machine is intended to perform, it can be supplied not only with an ordinary feed dog, but also with feed dogs featuring a coarse or fine tooth cut.

Dropping the Feed Dog

The feed dog is dropped for darning, embroidering and button sewing. To lower the feed dog (Fig. 21), turn drop feed control V clockwise (Fig. 22). The fabric will cease feeding. When the control is flicked back to its normal position, the feed dog will show a full tooth above the needle plate as it advances (Fig. 19), thus automatically resuming the feeding of the fabric.

Fig. 22 Drop feed control

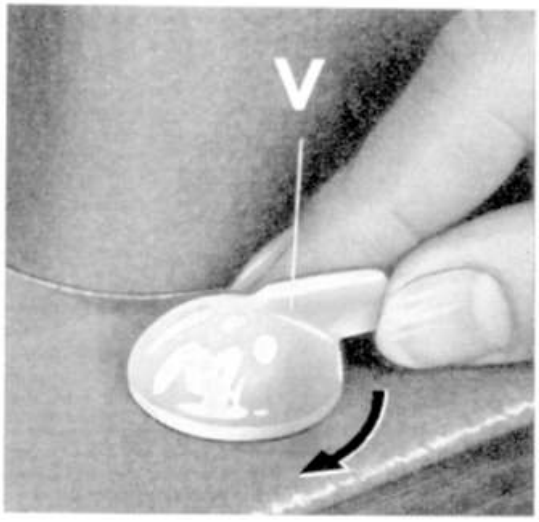

Fig. 21 Feed dog lowered

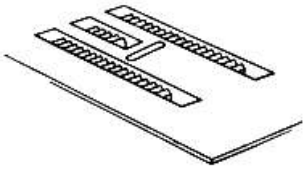

Stitch Length Regulation

The stitch length dial (Fig. 23) has two graduated sections of the same size, one from 0 to 1, and the other from 1 to 4. This feature greatly facilitates the fine regulation of the stitch length for satin stitching. The dial can also be set to any intermediate length between the graduation marks.

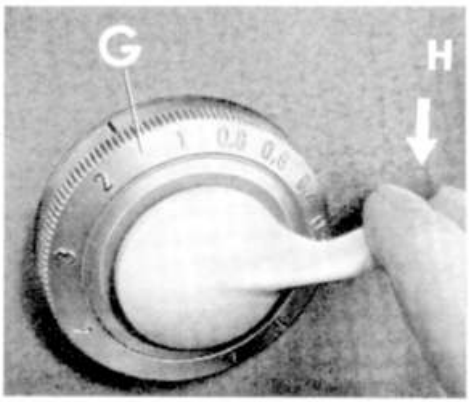

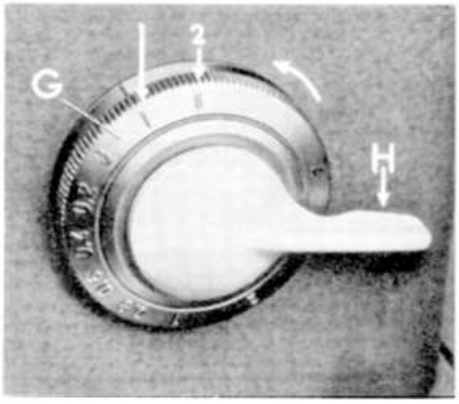

Figs. 23 & 24 Stitch length dial G with finger-tip control H

Downloaded from www.Manualslib.com manuals search engine

Reverse Sewing

To backtack the beginning or end of a seam, the machine is briefly switched to reverse stitching by depressing spring-loaded finger-tip control H. The machine can be switched to backward sewing, regardless of the stitch length set. When the control is released, the machine resumes forward sewing automatically. If a longer stretch of seam is to be sewn in reverse, turn the stitch length dial counter-clockwise past 0, setting it on one of the two unnumbered graduation marks (Fig. 24).

First mark = short reverse stitches,
Second mark = long reverse stitches.

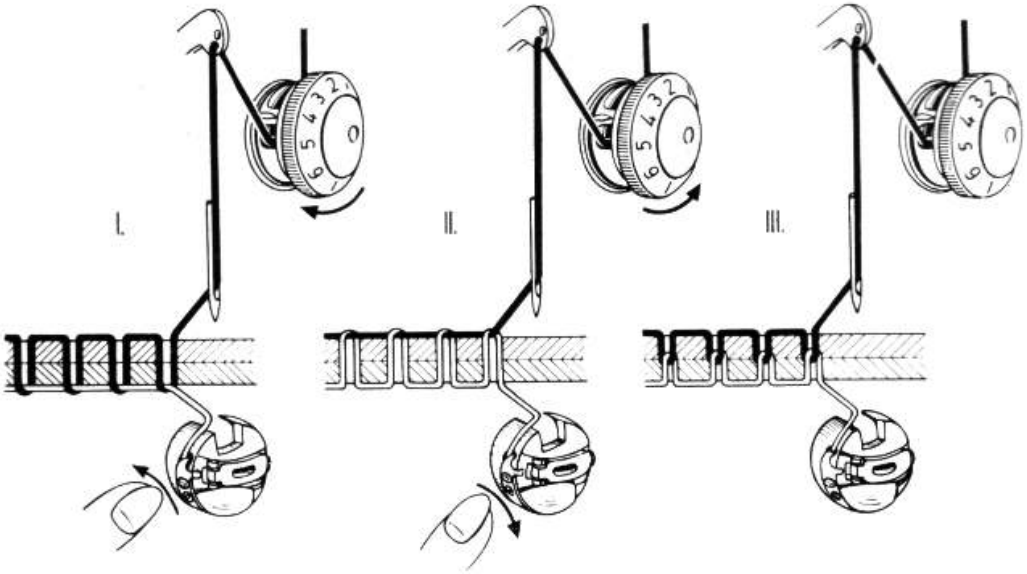

Fig. 25 Fig. 26 Fig. 27

Fig. 28 Bobbin thread tension S

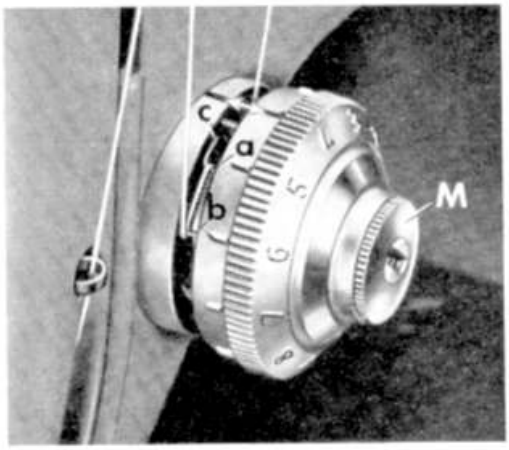

Fig. 29 Needle thread tension M

Downloaded from www.Manualslib.com manuals search engine

The Thread Tension

Both threads must be under proper tension to ensure a correct setting of stitches. Depending on the type of fabric being sewn and the thread size used, both tensions must be balanced so that the lock of the needle and bobbin threads occurs exactly in the center of the material. The correct amount of tension

on the needle thread is set by the upper tension (tension discs) on the front of the machine (Fig. 29), and

on the bobbin thread, by the lower tension (flat spring) on the bobbin case (Fig. 28).

The upper tension is so designed that all grades of tension, from loose to tight, can be covered with one complete turn of the tension dial. Any desired degree of tension can be set by the numbers indicated on the dial. This setting can be quickly restored if the tension should have been altered for some special sewing job.

The needle thread tension has a third tension disc for two-needle work so that both threads are separated in the tension mechanism.

The Bobbin Thread Tension

To balance the tensions correctly, begin by setting the bobbin thread tension at a medium grade. To this end, tighten the regulating screw until a noticeable resistance has to be overcome when pulling the thread.

Determine the correct bobbin thread tension by holding the thread end between your fingers and letting the bobbin case hang freely. The tension should be strong enough to keep the bobbin case from being pulled down by its own weight. However, as you jerk your hand slightly, the bobbin case should gradually slide down (Fig. 30).

Regulating the Thread Tension

No screwdriver is required to adjust the bobbin thread tension on Pfaff 260 and 360 machines. Instead, the knurled screw on the bobbin case can be turned with the thumb tip, as follows:

Turn it left for a looser tension,
and right, for a tighter tension.

Do not turn the knurled screw too far out so that it will not fall out and get lost.

Downloaded from www.Manualslib.com manuals search engine

The Needle Thread Tension

Once the bobbin thread tension has been set correctly, the final stitch appearance can be regulated by the upper tension dial.

Sketch III (Fig. 27) depicts the perfect stitch. Both threads are interlaced in the center of the material.

In sketch I (Fig. 25), the threads interlock on the underside of the fabric.

Cause: Upper tension too loose or lower tension too tight.

In sketch II (Fig. 26), the threads interlock on the surface of the fabric

Cause: Upper tension too tight or lower tension too loose.

In zigzag sewing, the lock of the thread should occur exactly at the zigs ana zags of the seam (Fig. 32).

Fig. 30
Determining correct bobbin thread tension

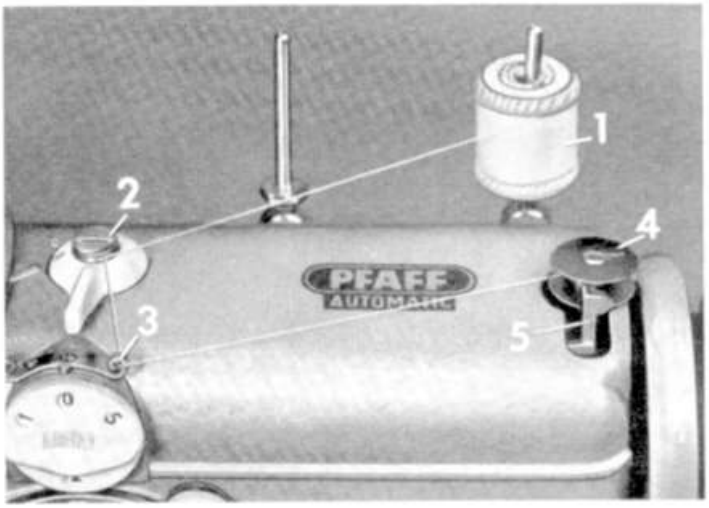

Fig. 31 Bobbin winding

Fig. 32 Zigzag seam (top and bottom)

Downloaded from www.Manualslib.com manuals search engine

General Checkup

Before the machine is delivered to the customer it must be given a thorough checkup to ascertain that it will function properly. Unfortunately, all kinds of sewing trouble may be caused in transit.

Winding the Bobbin

To make the machine ready for sewing, wind No. 60 thread on the bobbin, at the same time checking the correct working of the bobbin winder. Check to see, in particular, that the bobbin is wound evenly and that the bobbin winder stops automatically when the bobbin is full (see page 16).

Inserting the Bobbin Case

Insert a full bobbin into the bobbin case and check the tension on the bobbin thread (see page 15).

Having ascertained that the tension is correct, check to see that the needle is above the needle plate before you insert the bobbin case in the machine.

With the thumb and forefinger of your left hand, lift bobbin case latch k and turn the bobbin case until the slot marked with an arrow in Fig. 34 points up. Then place it on center stud s in the bobbin case base.

Release latch k and press against the bobbin case until you hear it snap into place. An improperly inserted bobbin case is apt to cause needle breakage.

In replacing the bobbin case make sure that the loose end of the bobbin thread will not get jammed in the hook raceway.

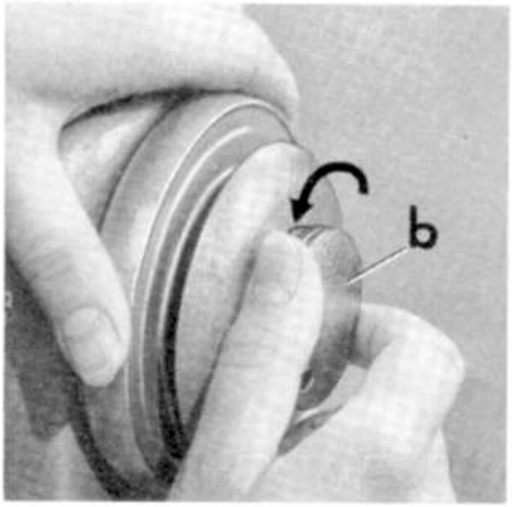

Fig. 33 Engaging and disengaging the sewing mechanism

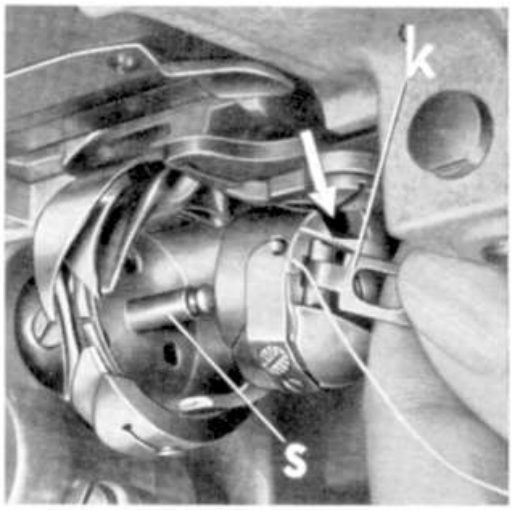

Fig. 34 Inserting the bobbin case

Downloaded from www.Manualslib.com manuals search engine

NEEDLE AND THREAD CHART

Types of Fabrics	Mercerized Cotton	Silk	Needle Size
Fine Fabrics such as georgette, chiffon, batiste, voile, lawn, silk.	80 to 100	0 to 000 twist	60 70
Lightweight Fabrics such as dress silks and cottons, sheer woolens, shirting, draperies.	70 to 80	A & B twist	80
Medium Fabrics such as lightweight woolens, madras, muslin, brocades, heavy silks and rayon, gabardine.	50 to 70	B & C twist	90
Heavy Fabrics such as coating, denim, corduroy, slipcover fabrics, bed tickings, lightweight canvas.	40 to 50	C & D twist	100
Very Heavy Fabrics such as heavy tickings, canvas, overcoating, sailcloth, upholstery.	24 to 40	E twist	90 to 110
Synthetics, Rayon, Acetate including nylon, orlon, dacron, plastics, etc.	Determined by weight of fabric 40 to 50		Determined by thread size 60 to 80

Downloaded from www.Manualslib.com manuals search engine

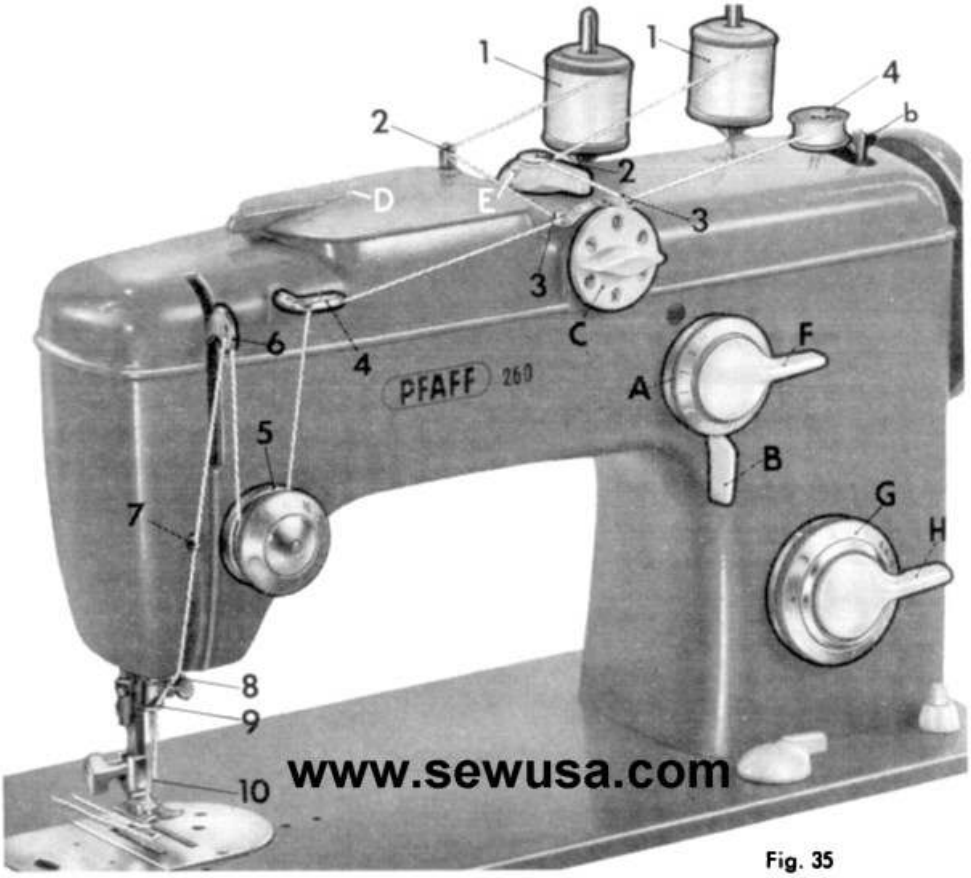

Fig. 35

Threading the Needle

Insert a new No. 80 needle and place a spool of No. 50 thread on the spool pin. The bobbin thread should be one size smaller than the needle thread. Then thread the needle as shown in Fig. 35 above.

The appearance of the finished seam depends on the correct relationship between needle, thread and fabric. To select the proper needle and thread sizes, therefore, consult the Needle and Thread Chart on page 18.

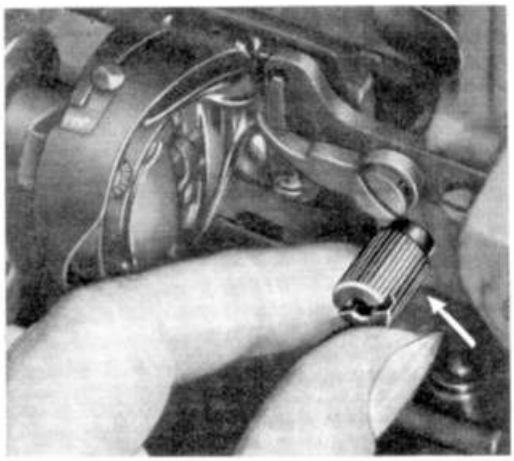

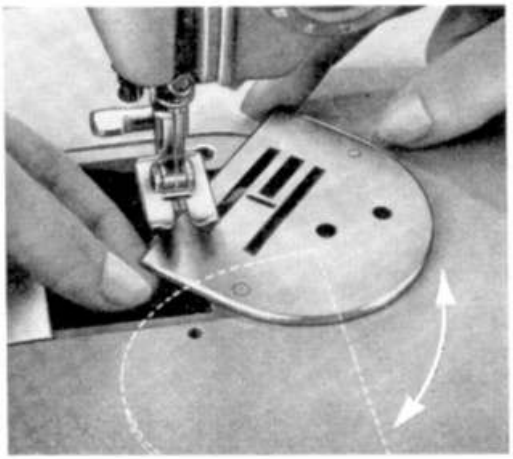

Figs. 36 & 37 Changing the needle plate

Downloaded from www.Manualslib.com manuals search engine

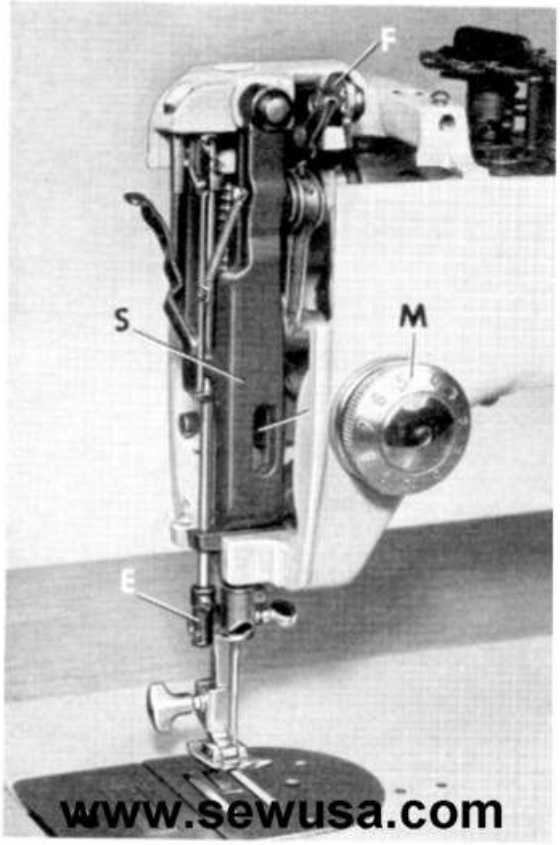

Fig. 38 Needle bar frame S

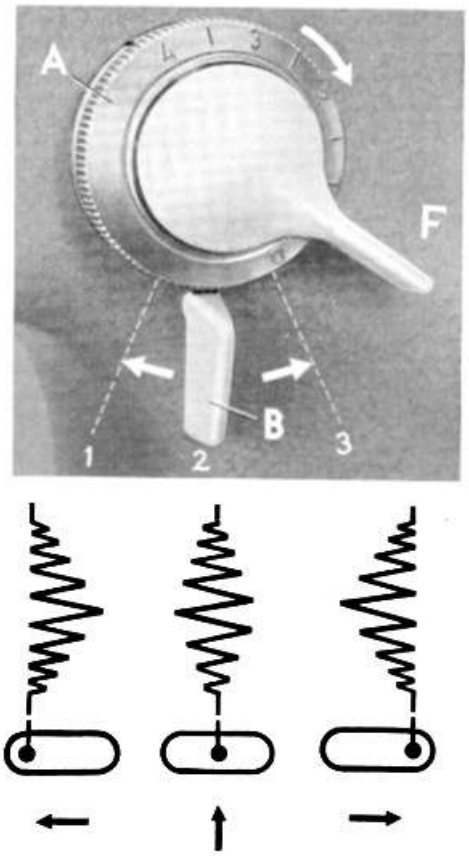

Fig. 39 Lever B changes the position of the needle in the needle plate slot

Zigzag Sewing

To make the zigzag stitch and the innumerable decorative stitches derived from it, the machine must be fitted with a vibrating, rather than a rigid, needle bar. In other words, in addition to moving up and down, the needle must be capable of swinging sideways, i. e. crosswise to the direction of feed. To accomplish this, the needle bar of a zigzag sewing machine is carried in a vibrating frame. The sideways motion of the needle bar emanates from an eccentric and is transmitted to the needle bar frame by a pitman. The amount of sideways motion is determined by the stitch width set.

The stitch width is increased by turning dial A clockwise (the higher the number on the dial, the wider the stitch). The maximum stitch width is about $^{3}/_{16}$", or 4.5 mm (Fig. 40).

When dial A is set on 0, the machine will sew straight.

The Zigzag Mechanism

The design of the zigzag control used on Pfaff machines 260 and 360 and Pfaff Automatics 260-261 and 360-261 differs from that of the former Pfaff 230 and 332 machines. The well-known zigzag knob of these machines has been replaced by the knurled stitch width dial A.

Downloaded from www.Manualslib.com manuals search engine

The Finger-Tip Control

When you depress finger-tip control F of the zigzag mechanism (Fig. 41), you can switch the machine from straight to zigzag stitching, the stitch width being about 3/16", or 4.5 mm. The machine resumes straight stitching as soon as the lever is released.

When stitch width dial A is set between 1 and 2 and lever B in notch 1, you can double the stitch width by depressing the finger-tip control. This is particularly important for making buttonholes and non-automatic embroidery designs. When dial A is set at 1.5 for sewing the buttonhole seam, you can instantly double the stitch (increasing it to 3) for bartacking the end of the buttonhole.

This eliminates a number of movements that were required previously.

When finger-tip control F is pushed up, rather than down, while the machine is zigzag stitching, it will be switched to straight stitching instantly, regardless of the stitch width set. This feature is important for tying off a seam.

Changing the Needle Position

To change the position of the needle in the needle plate slot, lever B is moved from the center (normal position) to the right or left, as may be desired (Fig. 39).

Note: Dial A serves to regulate only the stitch width while the spacing between stitches, or the stitch density, is regulated by stitch length dial G (page 13).

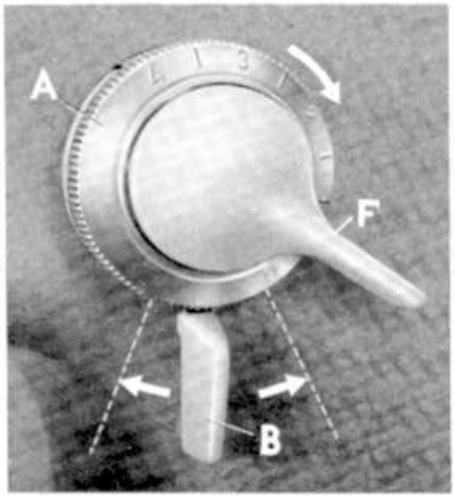

Fig. 40 Stitch width dial A

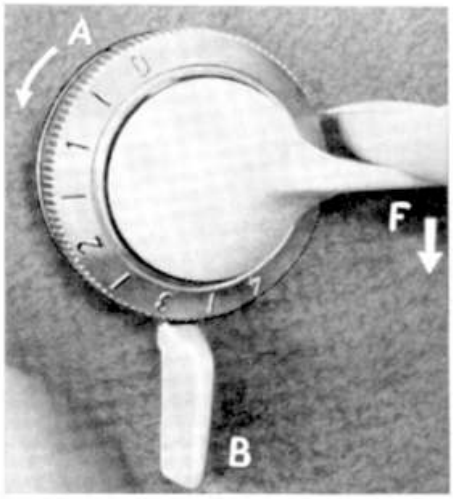

Fig. 41 Stitch width finger-tip control F

Downloaded from www.Manualslib.com manuals search engine

Mechanical Principle of Automatic Machines

If you want to sew decorative seams on an ordinary zigzag sewing machine, you have to move stitch width dial A, needle position lever B or finger-tip control F in rhythm, as may be required to produce the respective embroidery design. This is no easy matter and requires a great deal of practice and skill.

Ornamental stitching is greatly simplified, however, if a special mechanism is built into the machine which operates the above-mentioned controls automatically. A machine incorporating an automatic embroidery mechanism of this sort is called an "Automatic".

The mechanical principle of indirect control incorporated in an Automatic is shown in Fig. 42 below.

Feeler finger 2 rides on the rim of pattern cam 3 and, via a lever assembly, transmits the varying throws of the revolving cam to zigzag regulator stud 5. As a result, the slot at the back of this stud constantly changes its direction and, thus, alters the stitch width. This is how a decorative seam is produced (see samples illustrated in Fig. 43).

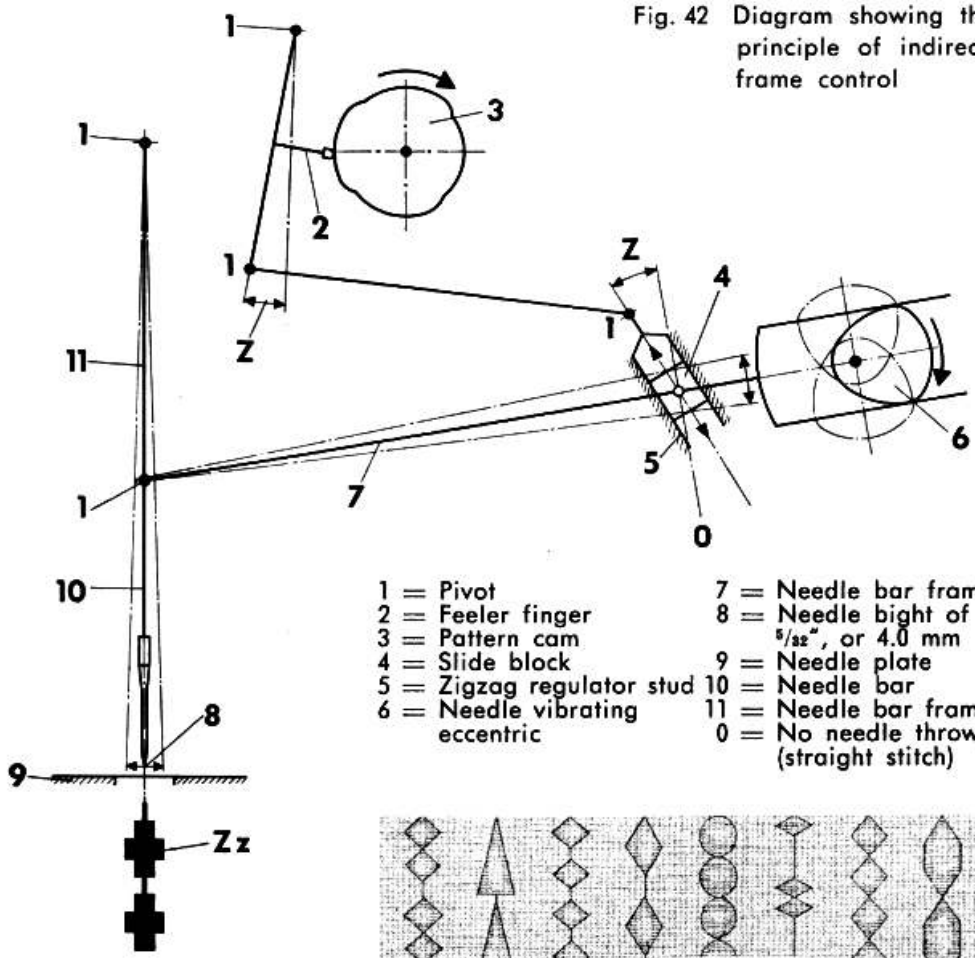

Fig. 42 Diagram showing the mechanical principle of indirect needle bar frame control

1 = Pivot
2 = Feeler finger
3 = Pattern cam
4 = Slide block
5 = Zigzag regulator stud
6 = Needle vibrating eccentric
7 = Needle bar frame pitman
8 = Needle bight of 5/32", or 4.0 mm
9 = Needle plate
10 = Needle bar
11 = Needle bar frame
0 = No needle throw (straight stitch)

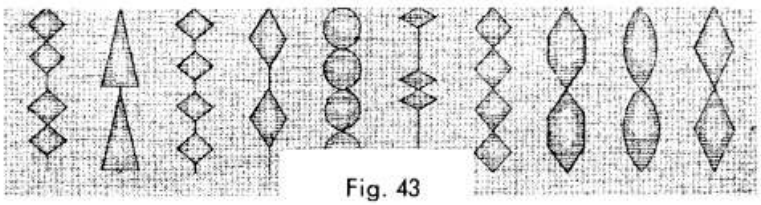

Fig. 43

Downloaded from www.Manualslib.com manuals search engine

Machines incorporating the principle of direct needle bar frame control work differently. They are so designed that both the zigzag regulator stud and the needle bar frame are operated from the pattern cam direct (see Fig. 44); in other words, the sideways motion of the needle bar frame is not derived from an eccentric.

Each pattern cam normally produces only one basic embroidery design. To change over from one design to another, a new pattern cam must be inserted in the machine.

Mechanical Principle of the Pfaff -261 Automatic

Both the Pfaff 260 flat-bed and the Pfaff 360 free-arm sewing machines are so designed that they can be converted into automatic machines at any time.

The automatic embroidery mechanism used for these machines can be easily installed in the machine arm. This arm, which is open at the top, is closed with a special top cover supplied with the automatic embroidery mechanism.

In contrast to automatic devices which are so designed that the throw of the pattern cam is transmitted to the needle bar frame directly (Fig. 44), the Pfaff automatic embroidery mechanism controls the needle motion indirectly, i. e. through the needle position and stitch width regulator assemblies. As a result,

Fig. 44 Diagram showing the mechanical principle of direct needle bar frame control

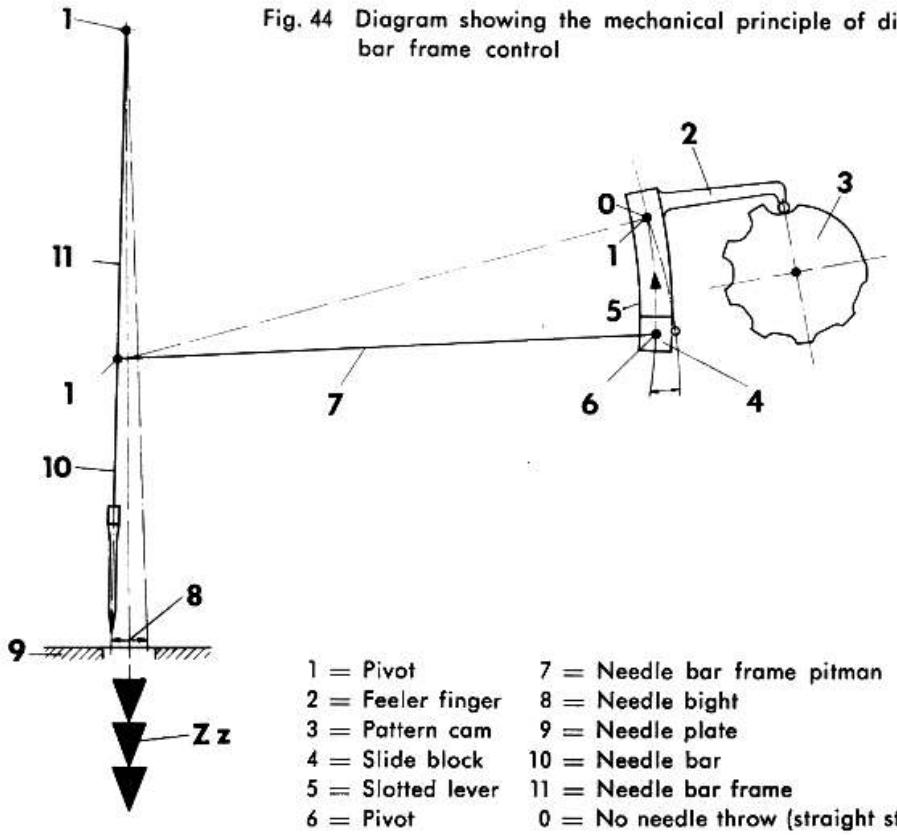

Downloaded from www.Manualslib.com manuals search engine

the mechanical principle of positively controlling the needle motion by an eccentric has been preserved in this machine (Fig. 42). Automatic machines incorporating this feature offer the additional advantage that the needle position and the stitch width can be varied either singly or jointly and that all patterns can be sewn in different lengths without altering the stitch density.

The Pfaff -261 automatic embroidery mechanism features a built-in, exchangeable cam assembly made up of eight pattern cams of different shape (Fig. 97).

With the aid of the embroidery design dial, controls A, B, C, D, E and F of both the machine and the automatic embroidery mechanism (Fig. 113) can be set to produce several hundred attractive embroidery stitches.

Another advantage afforded by this automatic embroidery mechanism is that the rotational speed of its cam assembly can be varied at will by setting the pattern length lever (4 in Fig. 46) anywhere between 0 and 7. All basic designs can, thus, be lengthened or shortened while retaining the stitch density.

All motions utilized in the automatic embroidery mechanism emanate from an eccentric which is arranged on the arm shaft and simultaneously serves as a set collar (6 in Fig. 46). Pressed against this eccentric by spring action is roller 1 which is carried on driving lever 2. As the arm shaft rotates, the eccentric pushes the roller and the driving lever sideways a certain distance. The amount of sideways motion determines the rotational speed of cam assembly 5.

In order to provide a possibility of varying this speed, the eccentric tapers off toward the right and the position of the driving lever can be varied in relation to regulating slide 3. As a result, the number of stitches per cam revolution can be increased or decreased, as required (Figs. 45–47).

When the regulating slide is moved to the right as far as it will go, the driving lever roller is opposite the concentric collar of the eccentric and out of contact with the eccentric so that the latter idles. As a result, the driving lever remains in its starting position (Fig. 45) and the cam assembly is not rotated. The automatic embroidery mechanism is completely disengaged.

Continued on page 26

Key to drawings on opposite page

1 = Roller
2 = Driving lever
3 = Regulating slide
4 = Pattern length lever
5 = Cam assembly
6 = Driving eccentric for automatic embroidery mechanism
7 = Arm shaft

V0 = Pattern cam does not rotate

V1 = Maximum amount of pattern cam rotation

V3 = Medium amount of pattern cam rotation

Downloaded from www.Manualslib.com manuals search engine

This is how the driving eccentric works

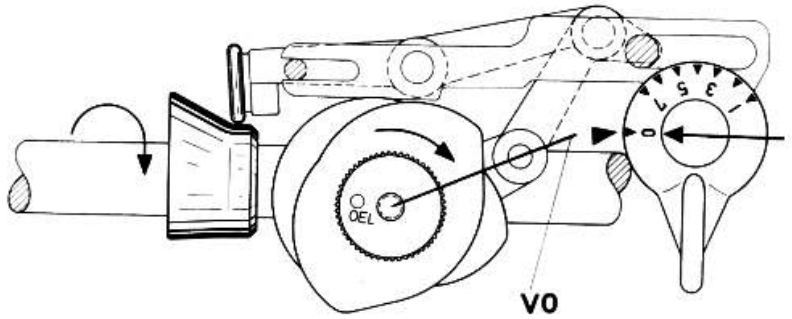

Fig. 45

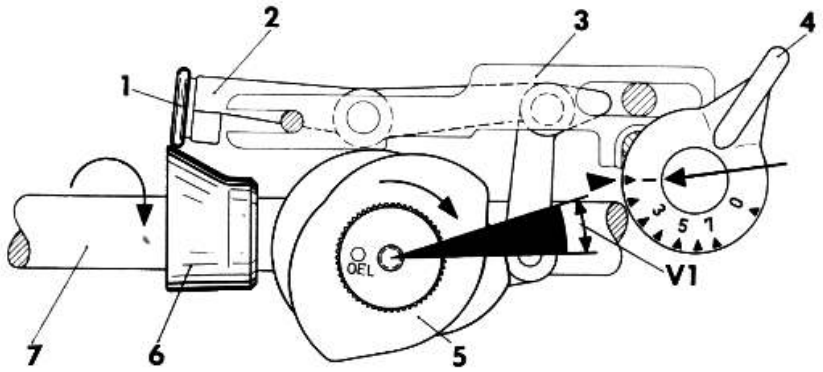

Fig. 46

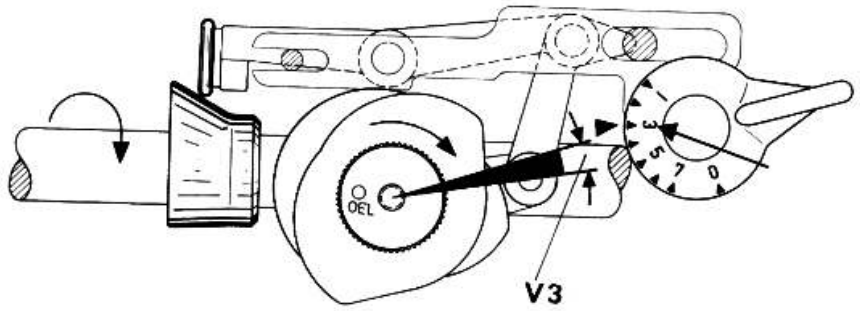

Fig. 47

Downloaded from www.Manualslib.com manuals search engine

As the regulating slide is moved to the left, the roller rides up on the conical part of the driving eccentric. The farther the regulating slide is moved to the left, the larger will be the throw of the driving lever and the higher the rotational speed of the cam assembly. This speed, in turn, determines not only the length of the design, but also the number of stitches it contains.

A large throw of the driving lever causes the cam assembly to rotate quickly, thus producing fewer stitches and a shorter design (Figs. 46 and 50).

And conversely, a small throw of the driving lever causes the cam assembly to rotate slowly, thus producing more stitches and a longer design (Figs. 47 and 50).

The rotational speed of the cam assembly can thus be varied between 25 and 100 stitches per cam revolution and design. The rate of speed is controlled by lever E (Fig. 113) which is arranged on the top cover and has eight graduations. As this lever is turned from one graduation to the next, an eccentric pin on the pattern length regulating crank (50561) engages in the fork of the regulating slide (c in Fig. 109) and moves this slide lengthwise of the machine arm.

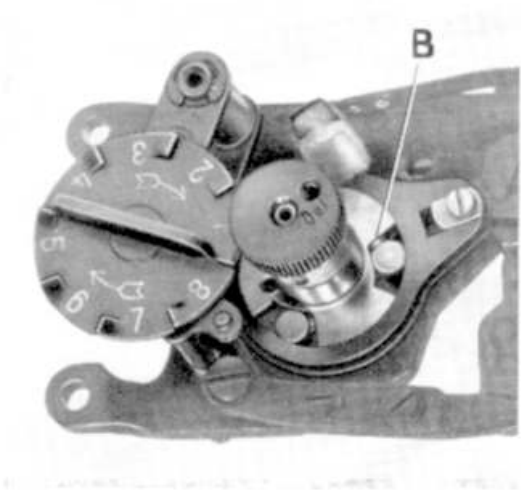

Fig. 48 Cam assembly backlash retainer

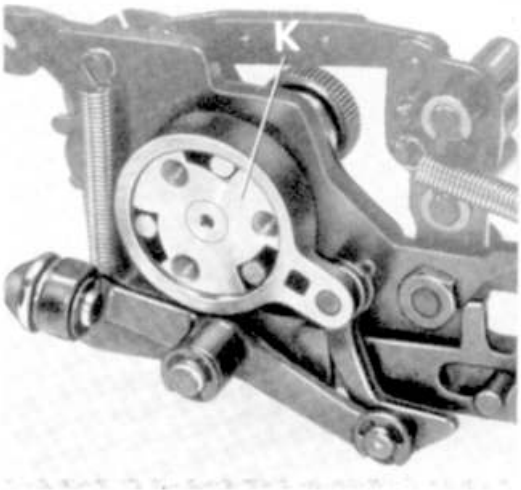

Fig. 49 Cam assembly feed clutch

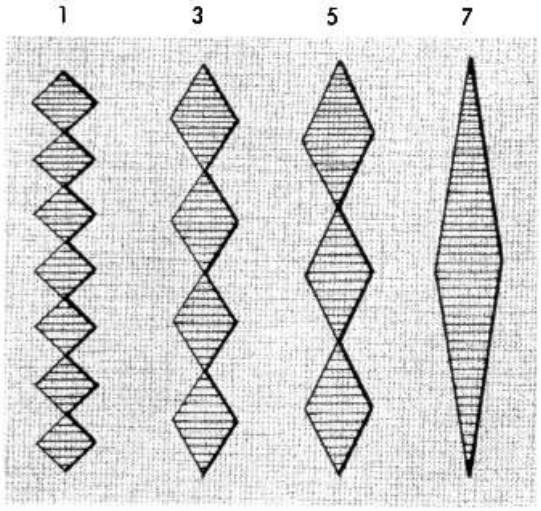

Fig. 50 Various pattern lengths as are obtained by setting lever E (4 in Fig. 46) at positions 1, 3, 5 and 7, respectively.

Downloaded from www.Manualslib.com manuals search engine

To ensure that the cam assembly will rotate only when the needle is out of the material, the position of the driving eccentric (Figs. 79 and 80) on the arm shaft must be adjusted in proper relation to the needle bar crank (105057). During each revolution of the arm shaft, the driving lever makes one sideways motion and, through a connecting lever (50371), rotates the cam assembly by a fraction of one revolution (intermittent feed).

The cam assembly naturally must revolve in one direction only and, in addition, must be retained in its position each time the driving lever returns for its next stroke. This requirement has necessitated the incorporation of a feed clutch assembly made up of a roller clutch (50473) and a clutch body (50483) with a backlash retainer. The exchangeable cam assembly is secured in position on the collar of the clutch body by a beehive spring and a thumb nut (a in Fig. 51).

Eight feeler fingers, arranged spirally around a center stud and offset at an angle of 45° against one another, make up the feeler finger assembly (t in Fig. 111). Cam selector dial D (Fig. 111) has eight graduations, one for each feeler finger. By turning this dial one eighth of a turn at a time, each feeler finger is set alternately to engage the cam opposite. All possible settings of the feeler finger assembly can be covered with one complete turn of dial D.

As the cam assembly rotates, the feeler finger rides on the rim of the corresponding pattern cam and transmits its rhythmic throws to the feeler finger assembly carrier (50386), an adjustable connection (50400), and the engaging lever driver (50499).

This driver carries three studs (50498) each of which is provided with a slot to receive one of the three engaging levers (50431, 50585, and 50599). Two of these levers are hinged to a connecting rod (105193), and one to the zigzag regulator arm (106178).

The front and central engaging levers control the stitch width and are secured in the two holes of the connecting rod by means of eccentric studs. Since each hole is arranged at a different distance from the fulcrum of the connecting rod, the engaging lever connected to the lower of the two holes will cause the zigzag regulator stud (106177) to make a larger rotation than will the engaging lever secured in the top hole. In addition, the front stud makes a larger sideways motion than do the two others.

All motions are adapted to one another so that the front engaging lever controls the needle motion for the entire width of bight, while the central engaging lever controls the needle motion only for half the needle throw.

The needle position is controlled by the rear engaging lever whose stroke is the shortest of them all and actuates the zigzag regulator arm.

Downloaded from www.Manualslib.com manuals search engine

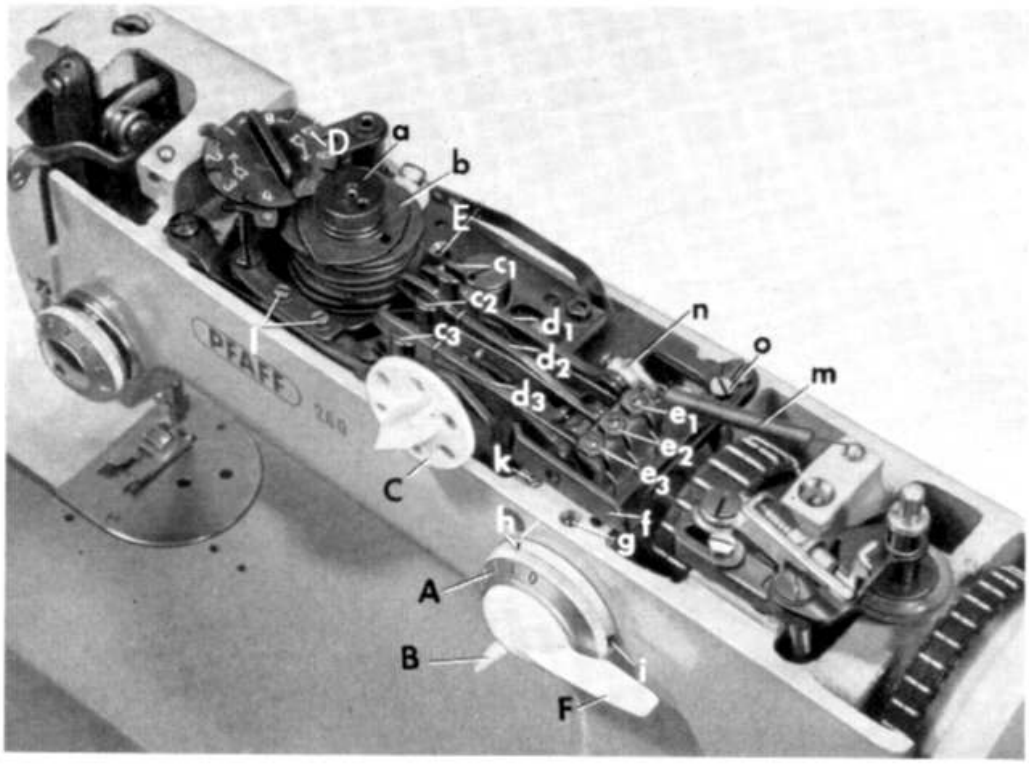

Fig. 51 Pfaff -261 automatic embroidery mechanism.
Dial C controls the setting of engaging levers d_1, d_2 and d_3

Which engaging lever, or levers, is to be applied in conveying the throw of the pattern cam to the zigzag mechanism is determined by the position of the cam stud (50418) which carries engaging lever dial C. This dial can be turned to six positions. When set on zero (see Fig. 52), all three engaging levers are raised against the pressure exerted by the spring assembly arranged above.

With all three engaging levers raised, the controls of the Pfaff Automatic can be set like those of any ordinary zigzag sewing machine.

When dial C is set at any other position, one or two engaging levers are engaged and transmit the motion of the engaging lever driver to the zigzag mechanism. The engaged lever falls into the slot of the stud underneath so that the transverse pin in this slot enters its notch.

When set at any position between 1 and 5, respectively, dial C effects the following settings in the automatic embroidery mechanism:

Downloaded from www.Manualslib.com manuals search engine

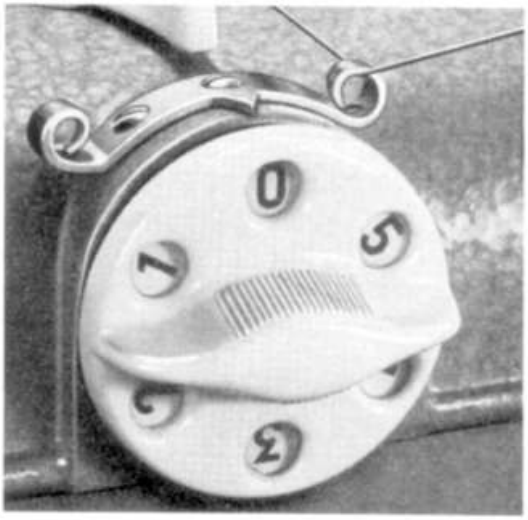

Fig. 52 Engaging lever dial C

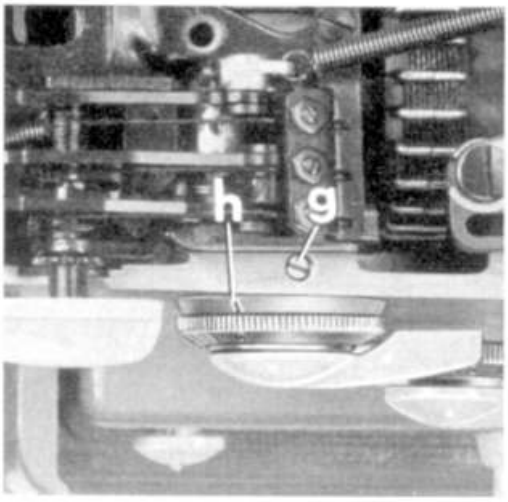

Fig. 53 Set screw g and mark h
(see adjustment procedure on page 66)

Dial C at 1

The central engaging lever is engaged and automatically controls the needle motion for half the width of bight. The needle position can be set by hand.

Dial C at 2

Both the central and rear engaging levers are engaged simultaneously, automatically controlling the needle motion for half the width of bight and the needle position, respectively.

Dial C at 3

The rear engaging lever is engaged and automatically controls the needle position. The desired stitch width can be set by hand.

Dial C at 4

The front engaging lever is engaged and automatically controls the needle motion for the entire width of bight. The needle position can be set by hand.

Dial C at 5

Both the front and rear engaging levers are engaged simultaneously, automatically controlling the needle motion for the entire width of bight and the needle position, respectively.

The Electrical Equipment

The electrical equipment of all Pfaff 260 and 360 sewing machines, with or without automatic embroidery mechanism, conforms to international safety regulations. Neutral electrical testing laboratories in Germany, Denmark, Norway, Sweden, Canada, and the U. S. have confirmed this. To comply with the

Downloaded from www.Manualslib.com manuals search engine

approval and test specifications of the Association of German Electrical Engineers (VDE), the electrical equipment of our machines must have either an earthing lead or double insulation.

Inasmuch as we are convinced that insulating is more effective than earthing, the electrical equipment incorporated in all Pfaff 260 and 360 sewing machines is doubly insulated. This means that the normal insulation (e. g. between the motor winding and the laminations) is complemented by a second protective insulation. In the case of the motors used with Cl. 260 and 360 machines, this insulation consists of a plastic housing.

If the normal insulation should fail (e. g. if the motor winding should be scorched), the additional insulation will reliably protect the user against electric shock.

Since this protective insulation is of great importance to the safety of the user, it is subjected to a stringent test at our factory. In the course of this test, 500-volt A. C. is applied to the normal insulation, while 4,400-volt A. C. is applied to the protective insulation of the completed machine. If neither a puncture nor a flashover has occured during a period of one second, the protective insulation has, in effect, passed the test with 20 times the normal load of 220 volts.

The type of insulation used (double insulation) is indicated on the model plate of the machine by two squares, one inside the other.

This type of insulation affords the advantage that practically no leakage of current will occur as a result of an aged normal insulation, a defective earthing wire, or the use of spark arrester. The danger of an electric shock has thus been successfully eliminated.

The foot control of the machine, on the other hand, is connected to earth by means of a safety plug. This connection passes from the wall outlet to the plug and thence to the foot control, without passing through the machine itself.

The ground connection will be effective only if the safety plug is used together with a safety socket that is actually earthed. Do not fail to impress this fact upon your customers as otherwise the earthing lead would be useless.

Warning

Whoever installs into our machines motors or other electrical parts of a make other than Pfaff thereby violates the German Trade Marks Act, for Pfaff sewing machines have been awarded the VDE seal only on account of the high quality of their electrical equipment.

Downloaded from www.Manualslib.com manuals search engine

Suppression of Radio and TV Interference

Motors and speed controls of household sewing machines are among the electrical equipment which frequently causes radio and TV interference.

The sparks occurring at the commutator and the contacts are miniature "jamming stations", which interfere with radio and TV reception over the power cords and through radiation.

The amount of interference is determined by the ratio between the useful energy received by the transmitter and the disturbing energy emitted.

The same amount of disturbing energy which will interfere with the reception of a local station only slightly, will interfere much more seriously with the reception of a distant station whose transmitting power is weak. Our customers, therefore, should be advised to use an outdoor aerial for their radio and TV sets in order to ensure good reception also for distant stations.

In Germany, the VDE (Association of German Electrical Engineers) has set the limits of maximum permissible radio and TV interference in the entire frequency range from 0.15 to 300 megacycles per second. This frequency range covers the long, medium, short, and ultra-short wave bands as well as TV.

The degree of interference has been classified into three groups, as follows:

G (coarse)
N (normal)
K (negligible)

The degree of interference caused by our electrical equipment lies below group N, which is very favorable.

The whole problem of radio interference suppression is exceedingly difficult. To ensure a degree of radio interference suppression which would meet all conceivable requirements would be much too expensive at present. For this reason, a compromise has been reached which is laid down in the VDE specifications. These specifications are adhered to in making our sewing machines non-static.

Pfaff household sewing machines have been tested and approved by the VDE. As a result, Pfaff is authorized to state the degree of radio interference suppression obtained on the model plate: Normal FN 59.

Note

To ensure effective radio interference suppression, make sure when repairing a machine that you use the same radio noise filters that were installed in the machine originally.

Downloaded from www.Manualslib.com manuals search engine

The Lighting System

The lighting system comprises the following component parts:

1. **The Push-Button Switch**
   Located on the front of the machine, this switch is capable of withstanding 100,000 switching actions.

2. **The 15-watt Light Bulb**
   It is tubular in shape and has a bayonet socket. Preference was given to this type of socket because bayonet-socket bulbs can be obtained in countries throughout the world.
   Other advantages are that this bulb can be easily exchanged and will not be loosened by vibration. Its burning life is 1000 hours, provided the line voltage corresponds to the voltage stamped on the bulb. The burning life of the bulb, as well as its luminous power, is greatly affected by the line voltage. A slight increase in line voltage will result in a drastic reduction of its burning life.

3. **The Lamp Socket**
   The lamp socket is secured to a grille which has a bent tab at its end so that it can be easily grasped and swung out (Fig. 54).

   When inserting a new bulb, be sure to slide its two pins F (Fig. 54) into the slots of the bayonet socket. Then press the bulb in and turn it clockwise. To take the bulb out of its socket, simply proceed in reversed sequence.

Fig. 54 Changing the light bulb

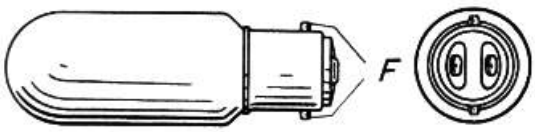

Fig. 55 Cross section of Pfaff foot control

1 = Foot control housing
2 = Contact actuating lever
3 = Contact springs
4 = Wire resistor
5 = Choke coils
6 = Radio noise filter
7 = Safety plug (connects to wall outlet)
8 = Combination plug (connects to sewing machine)
9 = Spark arrester
10 = Foot control pedal

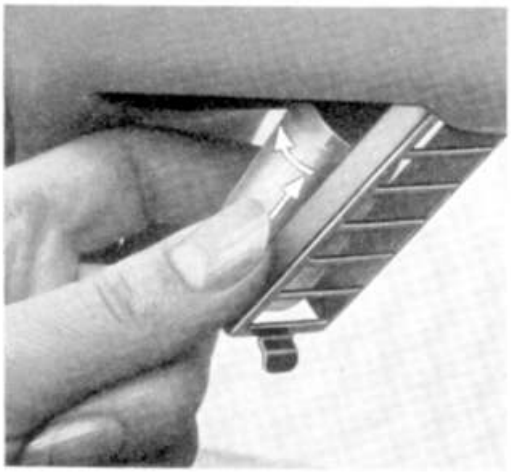

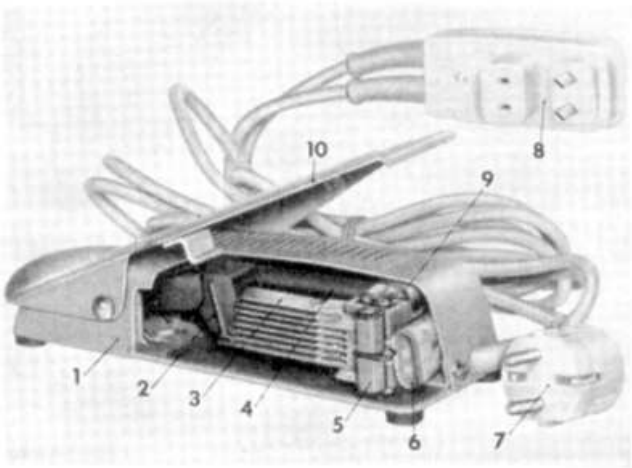

Downloaded from www.Manualslib.com manuals search engine

The Electric Drive

1. General

All domestic sewing machines are equipped with series motors which are characterized by the fact that their speed is dependent upon the load. This being so, a certain ratio must be observed between their output and their speed. If the motor is too powerful for the job at hand, it is likely to disturb the balance of the electrical system and to cause premature wear of, or even damage to, the sewing machine.

2. The Speed Control

The motor speed depends not only on the torque required to drive the machine, but also on the voltage applied to the motor. This fact is used to control the motor speed.

A variable resistor is placed in the motor circuit. This rheostat is available as a foot, knee, or treadle control (Figs. 57–59), as may be desired by the customer.

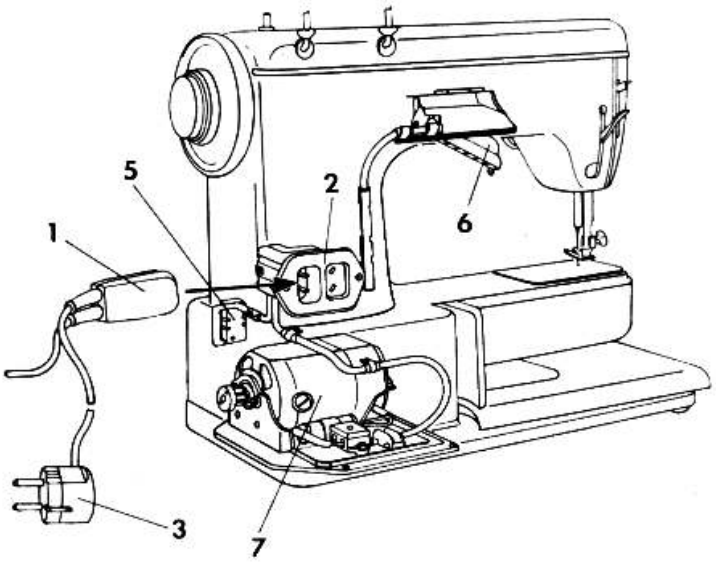

Fig. 56 Built-in Pfaff PE 370 motor

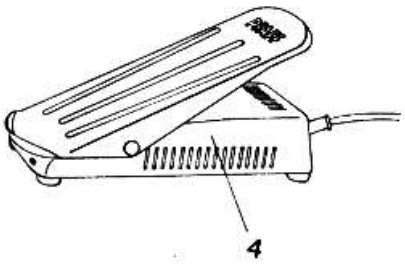

1 = Combination plug
2 = Double receptacle
3 = Safety plug
4 = Foot control
5 = Light switch
6 = Light bulb with grille (swing-out type)
7 = Motor with radio noise filter

Downloaded from www.Manualslib.com manuals search engine

All Pfaff speed controls are equipped with a resistor made of nickeline wire which is extremely durable and will withstand hard wear.

One of the laws of electricity says that the energy annihilated in the rheostat is inevitably converted into heat and that the amount of heat released in the process is the same, regardless whether a carbon-pile or a wire rheostat is involved.

Occasional complaints about this fact indicate that this physical law is not enough known among our customers.

3. The PE 370 Motor

This type of motor is used in the Pfaff 360 (-261) free-arm portable sewing machine.

In compliance with safety regulations, the PE 370 motor is enclosed in a plastic housing. Its principal components are as follows:

1. Stator
2. Rotor with commutator
3. End shield (drive end), with powder-metal bearing and screwholes for mounting it on the motor base plate
4. End shield (opposite end), with powder-metal bearing and brushholder
5. Carbon brushes

When operating at 4,700 r.p.m., the motor has an output of 30 watts which corresponds to the power required to drive a portable sewing machine and guarantees a minimum sewing speed of 1,200 s.p.m.

The motor, together with the radio noise filter and the terminal box, is mounted on the motor base plate. The technical data of the motor is recorded on the rating plate which is screwed onto the bottom of the motor base plate. The wiring of the motor is illustrated in Fig. 56.

Fig. 57 Treadle control

Fig. 58 Knee control

Fig. 59 Foot control

Downloaded from www.Manualslib.com manuals search engine

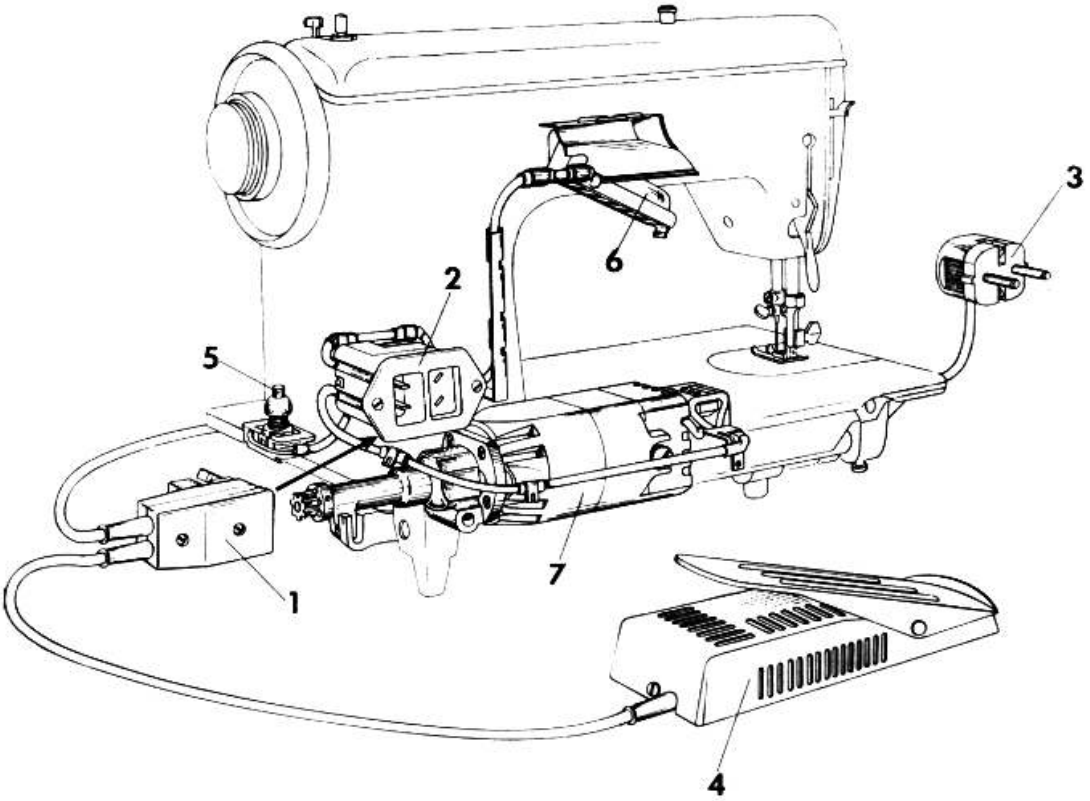

Fig. 60 Built-in Pfaff 260 motor

1 = Combination plug
2 = Double receptacle
3 = Safety plug
4 = Foot control
5 = Light switch
6 = Light bulb with grille (swing-out type)
7 = Motor with radio noise filter

4. The PE 260 Motor

This type of motor is used in the Pfaff 260 (-261) sewing machine. In compliance with safety regulations, the PE 260 motor is enclosed in a plastic housing (see note on insulation on page 30). Its principal components are as follows:

1. Stator
2. Motor with commutator
3. Housing section (drive end), with powder-metal bearing and screwholes for mounting it on the motor bracket
4. Housing section (opposite end), with powder-metal bearing and brush-holder
5. Carbon brushes

When operating at 7,500 r.p.m., the motor has an output of 45 watts which guarantees a minimum sewing speed of 1,500 s.p.m.

Multi-Voltage Motors for Pfaff 260 and 360 Machines

Effective July, 1961, Type PE 261 and PE 371 motors are available for Pfaff 260 and 360 machines, respectively, which can be switched to three voltage ranges, as desired.

Downloaded from www.Manualslib.com manuals search engine

These motors have the same dimensions as the PE 260 and PE 370 motors and are equipped with a voltage selector switch which can be set to the desired voltage range by means of an ordinary screwdriver. The voltage ranges incorporated are as follows:

I – 105–130 volts
II – 135–165 volts
III – 200–250 volts

A specially dimensioned speed control is supplied with these motors.

Maintenance

Lubrication

Pfaff household sewing machine motors require no additional lubrication, for they are equipped with self-lubricating powder-metal bearings.

Important

Before you proceed to check the electrical equipment, always pull the plug out of the wall outlet because an electric shock may be fatal.

Changing the Carbon Brushes

The quality of the carbon brushes used in our sewing machines guarantees a long service life.

When replacing a used brush which was found to be serviceable still, make sure its worn end faces toward the commutator (the curvature of this worn end should match the curvature of the commutator). If it is inserted with the wrong end facing the commutator, heavy sparking will result.

To exchange a carbon brush, unscrew the cap by turning it counter-clockwise, and take the old brush out. When inserting a new brush, take care that it slides down into the duct until it contacts the commutator. Then slip the cap over the spring, push it against the brush duct, and screw it down by turning it clockwise.

Take care that the new carbon brushes are the same quality as those used in the motor originally. The perfect working of the motor and a long service life of both the commutator and the brushes depend on it.

Cleaning the Commutator

From time to time, check and clean the commutator. To do this, wipe the commutator with a rag moistened with cleaning fluid. If grooves or scorched spots should occur on the commutator, it is advisable to send the complete motor to the factory for re-turning the commutator, a job which calls for special skill.

Storing Sewing Heads and Cabinets

It goes without saying that sewing machine storerooms must be absolutely dry. If adverse local conditions make it impossible to meet this requirement, it is

Downloaded from www.Manualslib.com manuals search engine

strongly recommended to install a dehumidifier which will keep the degree of moisture constant, irrespective of the season. Moisture, particularly when it rises from the floor, has a highly detrimental effect on the machines and cabinets stored. When machines are stored in moist locations, even the film of rust preventative fluid which has been applied to the machines at the factory cannot prevent the occurrence of a slight trace of rust. If cabinets with mounted machines are to be stored in their cartons, make sure that the packing has not absorbed any moisture in transit. If it has, unpack the machine at once and store it separately. Sewing heads are best stored on shelves, and cabinets, whether packed or unpacked, on a lath grid.

Checking Cabinets and Stands

Before mounting the sewing head, check and oil the cabinet or treadle stand selected for the machine in question. To do this, place it on a level surface and check whether the door and all drawers open easily. If not, apply a little paraffin wax to all frictional surfaces. Next, if the machine in question is foot-driven, oil the following parts of the treadle mechanism:

1. Treadle wheel bearing
2. Pitman bearing
3. Treadle bearing

Check to see that the treadle has no excessive play between the centers. If adjustment is required, take a wrench, loosen the set screw of one of the centers, and push the center against the treadle as far as it will go, without rotating it. Securely tighten the set screw which engages the flat spot on the center. After the adjustment, check to make sure the treadle moves easily.

Attaching the Bedplate Extension

(German-made cabinets only)

Stand the machine upright so that it rests on its needle-bar end (place a felt pad under the face cover), and turn the bedplate toward you.

Hold the bedplate extension so that its connecting clip faces downward, and slip it onto the balance-wheel end of the bedplate, insert screw and washer, bring the extension in line with the bedplate, and screw it down. Minor corrections may be made when the sewing head is mounted on the cabinet.

Mounting the Sewing Head

Open the cabinet on which the machine is to be mounted, and swing up the sewing head hinges as far as they will go. Then turn out the set screws on the

Downloaded from www.Manualslib.com manuals search engine

machine far enough so that they do not protrude into the boreholes which receive the hinge studs.

Seize the machine by the front end and the arm standard and tilt it back slightly. Then push it onto the studs, making sure that both studs enter the boreholes simultaneously, and slide it down as far as it will go. Failure to observe this rule may cause the studs to be bent. Now swing the machine down to the normal position for sewing. Check whether there is an even and sufficiently wide interspace between the front edge of the bedplate and the top flap of the cabinet. If this space should be too wide, slip as many spacers (28419) onto the hinge studs as may be required to reduce it to normal. Tilt the machine back and tighten the set screws securely so that they will not loosen when the machine, dropped into its cabinet, is shipped to the customer.

Great caution must also be used in lifting the machine off the hinge studs. Make particularly sure that the set screws are turned out far enough.

Removing the Rust-Preventative Fluid

Before they leave the factory, all Pfaff sewing machines are sprayed with a rust-preventative fluid in order to prevent rust occurring on the metal surfaces in transit and subsequent storage. It cannot be avoided in applying this fluid that tiny drops occasionally enter the bearings where they may cause hard running of the machine. To prevent this, rinse all bearings with cleaning fluid, or kerosene, and apply Pfaff sewing machine oil to all oiling points before the machine is delivered to the customer.

Cleaning and Oiling

No Pfaff dealer should fail to impress upon his customers the importance of regular machine care, for the longevity, smooth running, and satisfactory performance of the machine depend on it. (See also the illustrations on pages 40 and 41).

Removing the Top Cover

After removing the top cover, it is possible to reach all oiling points and to adjust the various mechanisms located in the machine arm.

Two studs hold the top cover in position on the arm casting. To remove the top cover from the machine, lift it up perpendicularly.

Downloaded from www.Manualslib.com manuals search engine

Cleaning the Feed Dog and the Sewing Hook

Lint is likely to accumulate on the underside of the needle plate and in the vicinity of the sewing hook. Therefore, from time to time, strip the needle plate and remove the lint accumulated on its underside as well as packed between the tooth rows of the feed dog. At the same time, do not forget to clean the sewing hook (Fig. 66).

Important

Use non-resinous and acid-free Pfaff sewing machine oil only. Never use animal or vegetable oils, for they are entirely unsuitable.

In general it may be said that the bearing surfaces of all moving and rotating parts require regular lubrication. The oiling points are marked by arrows in Figs. 61–65 and, hence, will be found easily.

To rinse the machine with cleaning fluid thoroughly, it is best to place it on a stand. Provided proper caution is used, it may be rinsed even after it has been mounted on a cabinet.

Here is the procedure to follow:

Tilt the machine back and squirt cleaning fluid into all oilholes marked by an arrow in the pertinent illustrations. Use a separate oiler for this purpose.

Make sure that the clip belt does not come in contact with the cleaning fluid or the oil, as this may cause hard running of the machine.

One or two drops of oil normally are sufficient for each oiling point. Running the machine for just a few minutes will suffice to work the oil thoroughly into all the bearings. Excessive oiling will cause soiling of the work, the excess oil forming residues which, together with the accumulated dust and lint, in time will cause heavy working of the machine.

Removing and Replacing the Face Cover

The face cover normally need only be removed when the needle and presser bars have to be adjusted or the parts at this end of the machine need cleaning. To do this, loosen set screw K (Fig. 63) and pull the face cover down, then away from the machine.

Replacing the face cover is very simple because on Pfaff 260 and 360 machines no part of the needle threader mechanism is attached to the face cover.

Downloaded from www.Manualslib.com manuals search engine

It is recommended, about once every six months, to squirt ample cleaning fluid into all oilholes. Then raise the presser foot, unthread the needle, and run the machine at high speed. After all dirt and gummed oil have been washed out, oil the machine and wipe it dry. This procedure will help preserve the smooth running of the machine, and should be applied regardless whether the machine is used regularly or not at all. Cleaning and lubricating the sewing hook is illustrated on page 41. See also the illustrations on page 84.

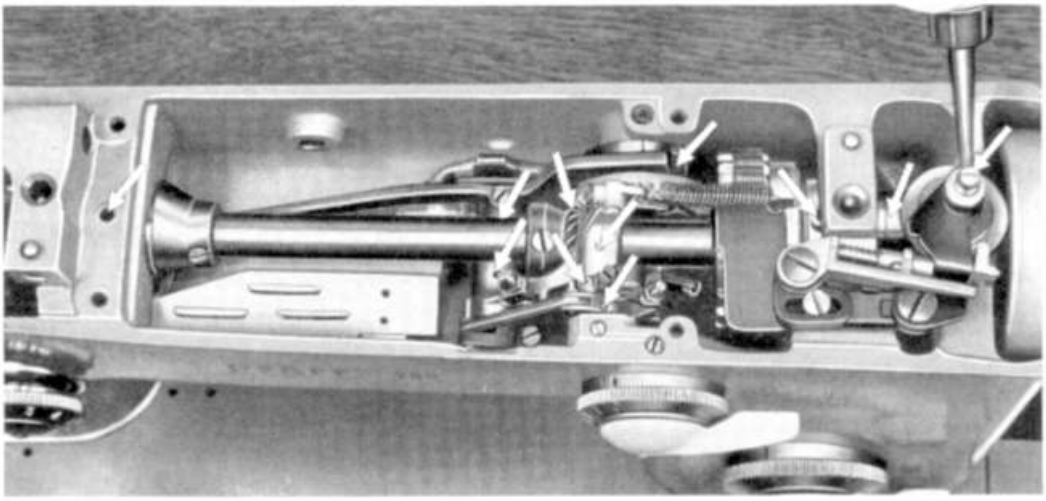

Fig. 61 Oiling points of the Pfaff 260 (top cover removed)

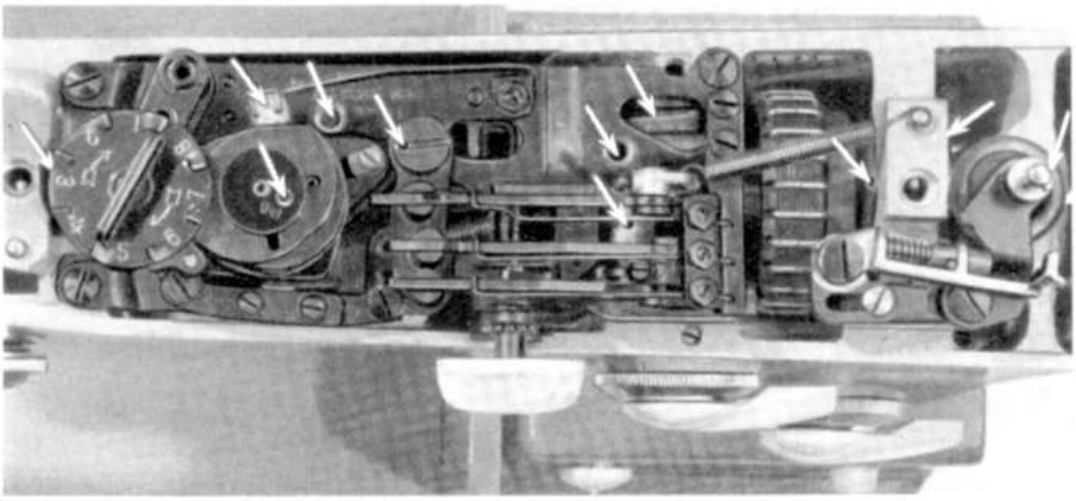

Fig. 62 Oiling points of the Pfaff 260-261 Automatic (top cover removed)

Downloaded from www.Manualslib.com manuals search engine

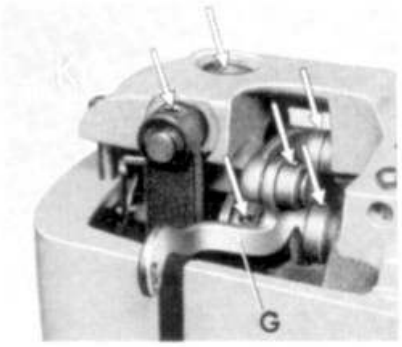

Fig. 63 Oiling points at the front end of the machine (top and face covers removed)

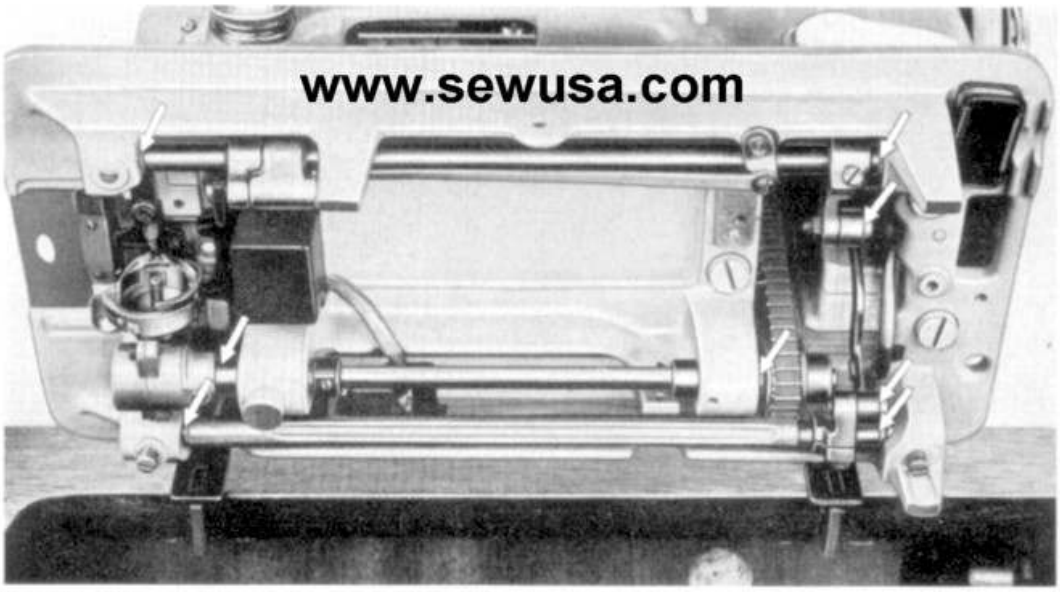

Fig. 64 Oiling points on the underside of the Pfaff 260

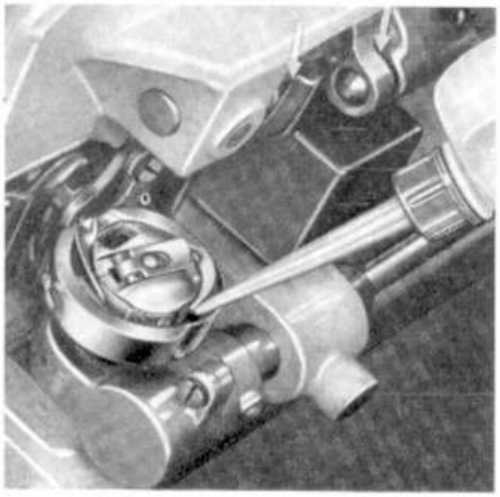

Fig. 65 Oiling the sewing hook

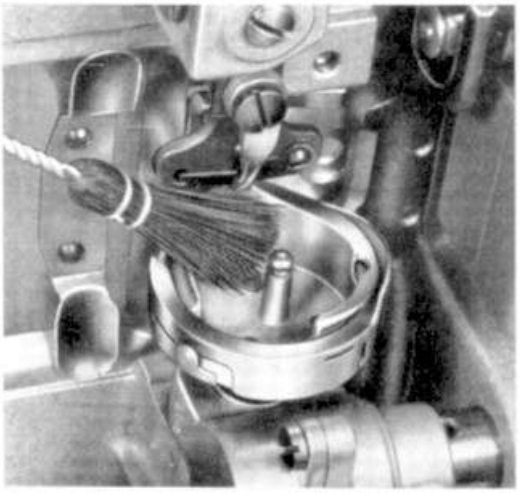

Fig. 66 Cleaning the sewing hook

Downloaded from www.Manualslib.com manuals search engine

The Needle Threader

Operation of the needle threader is extremely easy. Simply make sure that the needle is at its highest position, i. e. that the lower hole of the ascending take-up lever d (Fig. 67) is in line with the bottom edge of the top cover. Then lower the sewing foot and:

1. With your left hand, push needle threader control p down until threader prong w penetrates the needle eye. Keep the control in this position.
2. Hold the thread loosely and lead it from the left around the small pin q, then place it behind the hook of threader prong w.
3. Release control p slightly until prong w reverses and pulls the thread through the needle eye (Figs. 68–71 and 96).
4. Jerk control p down again so that the thread loop will fall off prong w. Pull the thread through the needle eye by hand and release control p.

The needle is threaded from front to back.

Turn the balance wheel to draw the bobbin thread up through the needle hole, and place both threads back under the sewing foot.

Stitching Off the Machine

Begin to stitch off the machine on a medium-grade fabric. Whoever wants to be sure that his customer will be really satisfied with the performance of his machine, will also try it out on delicate and heavy fabrics. Establish the correct needle thread tension while sewing on these materials with straight and zigzag stitches.

The complete range of sewing tests includes stitching across tucks as well as sewing forward and backward with the machine set for straight stitches of varying lengths.

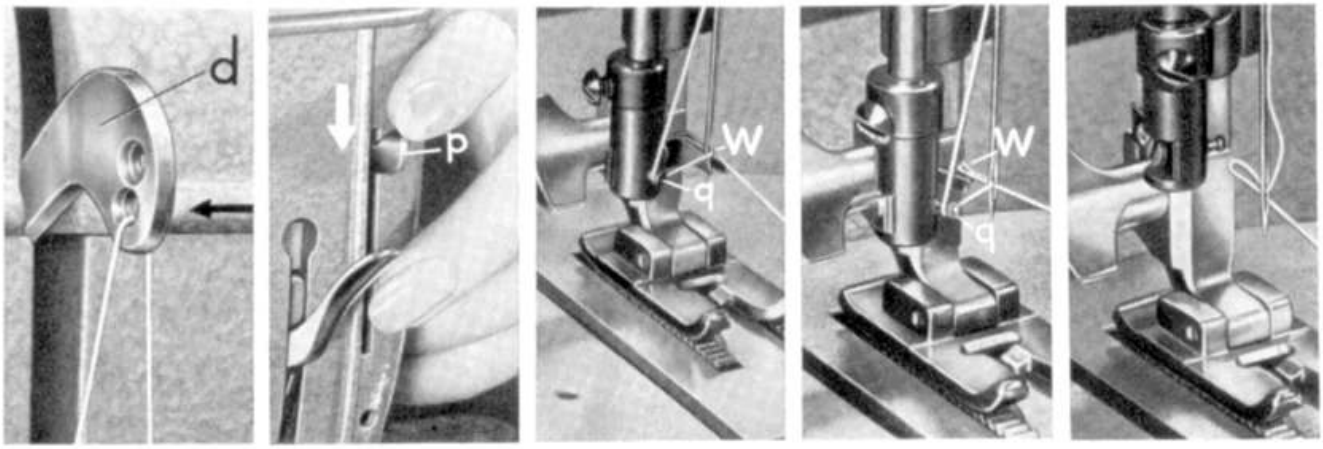

Figs. 67-71 Threading the needle with the Pfaff needle threader

Downloaded from www.Manualslib.com manuals search engine

Even when stitching delicate fabrics, the machine must produce a seam which does not pucker. All of the above tests, naturally, should be repeated with narrow and wide zigzag stitches. Also try out whether the machine works properly when you overcast an edge, and check to see that it does not skip stitches when the needle stitches over the edge.

After switching back to straight stitching, check the performance of the machine with different needle positions.

Checking the Automatic Mechanism

If the machine in question is equipped with an automatic embroidery mechanism (Pfaff 260-261 and Pfaff 360-261), stitch various embroidery designs to check the performance of this mechanism. For best results, choose the following settings:

D 3 – C 2 – B left – E 1
D 7 – C 3 – B left – E 1
D 4 – C 5 – B left – E 1

Run the machine slowly and check whether the automatic embroidery mechanism works properly as it gradually changes the stitch width from 0 to 4, and back to 0 again. The mechanism must not get stuck in the process, nor should the thread break.

Before an Automatic is delivered to the customer, it should be oiled thoroughly. Do not forget to put a few drops of oil on the oil pad which serves to provide a constant oil film on the rims of the individual pattern cams.

Regulating the Pressure on the Material

The medium amount of pressure for which the presser bar has been set at the factory will be found adequate for all ordinary sewing operations and need not be changed. If mostly sheer and delicate fabrics are to be sewn, however, ease the pressure exerted by the presser bar spring by turning out regulating screw V (Fig. 75). To increase the pressure for dense and thick materials, turn screw V inwardly.

Observe these general rules:

Normal pressure:	Regulating screw is flush with top of casting.
Light pressure:	Regulating screw protrudes about 1/8" from top of casting. Do not turn the screw out too far as, otherwise, it will bear against the top cover.
Strong pressure:	Regulating screw is about 3/16" below top of casting.

Downloaded from www.Manualslib.com manuals search engine

Threading the Machine for Two-Needle Work

The needle thread tension has a third tension disc which separates the threads in the tension mechanism. For the same reason, the take-up lever has two boreholes, one for each needle thread. How the machine is threaded for two-needle work is illustrated in Fig. 72. Twin needles cannot be threaded with the needle threader.

Fig. 72 Threading diagram for two needles

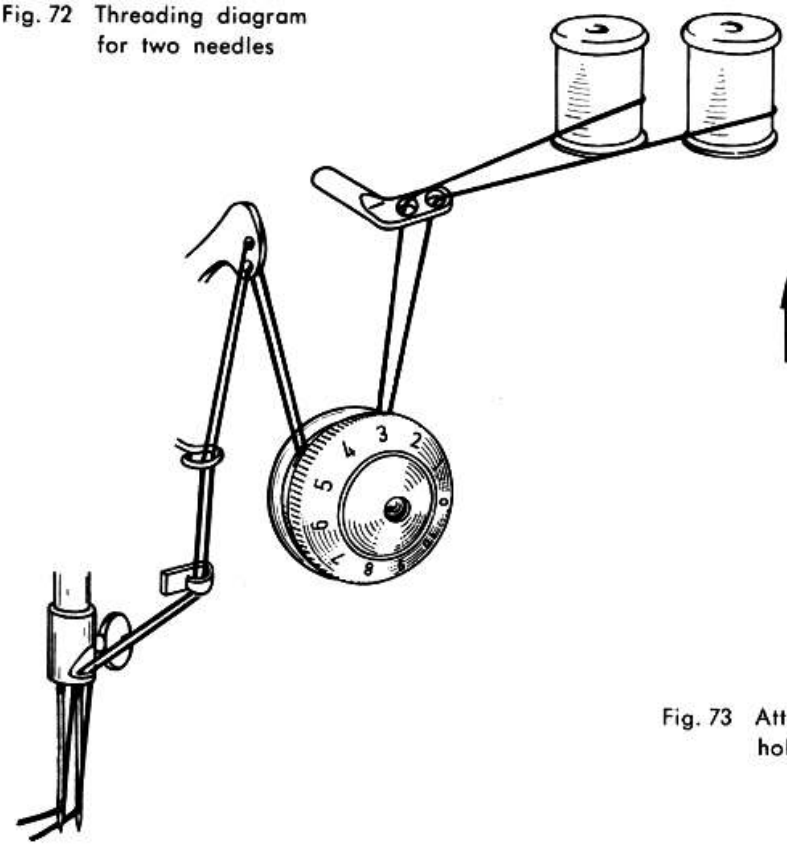

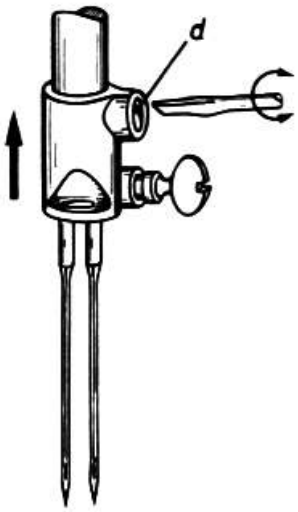

Fig. 73 Attaching the double-needle holder

Preparing the Machine for Two-Needle Decorative Sewing

To sew decorative designs with two needles, the needle plate, feed dog, and sewing foot must be exchanged for an identical parts set designed for a stitch width of 1/4", or 6 mm. (This parts set is supplied at extra cost.) *)

Converting the machine for two-needle decorative sewing is very simple. Begin by removing the needle plate. Set the machine for the longest stitch and turn the balance wheel back and forth until the front and rear set screws in the feed dog can be reached with a screwdriver. Exchange the normal feed dog for the feed dog designed for a stitch width of 1/4", or 6 mm. Before you screw it down for good, replace the needle plate, and check whether the feed dog moves freely in the feed slot (see page 53). If it does, remove the needle plate, tighten the feed dog set screws, and screw on both the needle plate and the sewing foot designed for a stitch width of 1/4", or 6 mm.

*) Note: All Pfaff 260 machines supplied after January, 1962, are equipped with a feed dog which need not be changed any more.

Downloaded from www.Manualslib.com manuals search engine

To make two-needle ornamentations and tucks, the machine must be equipped with a double-needle holder designed for a needle gauge of 5/64", or 2,0 mm (105381 x 2,0). Available at extra cost, this needle holder is secured to the needle bar by screw d (Fig. 73).

Any machine fitted to make stitches 1/4" wide can also be used for all ordinary sewing operations without any difficulty.

Rules Your Customers Should Know

1. When sewing, the balance wheel should always turn toward you, i. e. counter-clockwise. Never turn the balance wheel in the opposite direction, especially after the machine has been threaded.
2. Lay both threads back under the sewing foot before you begin sewing.
3. Always raise the take-up lever to its highest position before you begin and after you have completed a seam.
4. Never run a threaded machine unless you have fabric under the presser foot.
5. Put one or two drops of oil into the hook raceway each day you sew.
6. For all Pfaff sewing machines use only ORIGINAL-PFAFF needles, accessories, and replacement parts.

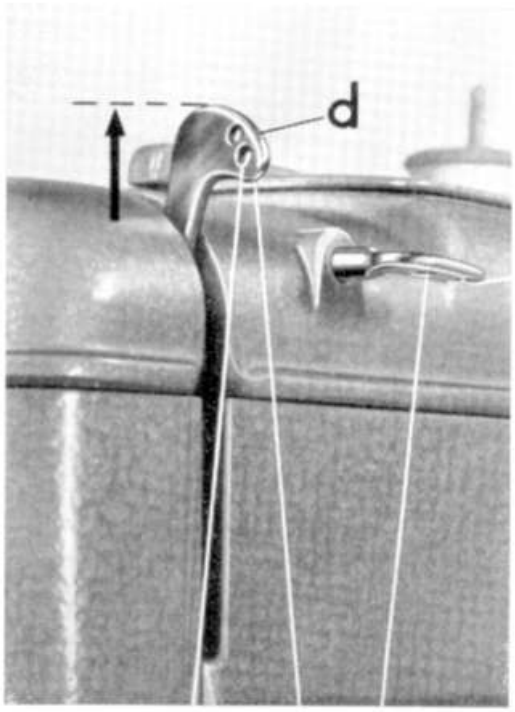

Fig. 74 Take-up lever at its highest position

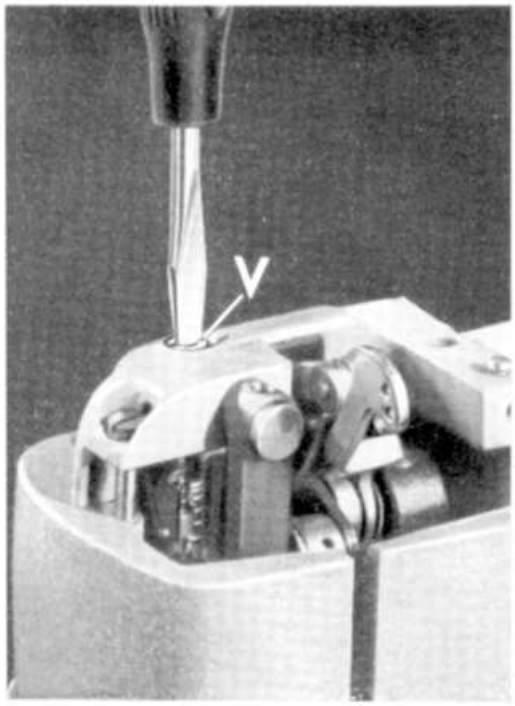

Fig. 75 Regulating the sewing foot pressure

Downloaded from www.Manualslib.com manuals search engine

ADJUSTMENT PROCEDURES

The following instructions apply to both the Pfaff 260 flat-bed and the Pfaff 360 free-arm sewing machine. Wherever variations in design necessitate different adjustment procedures, each procedure will be discussed separately. To check the settings of a machine or to reset it after it has been stripped and reassembled, follow the procedures outlined below:

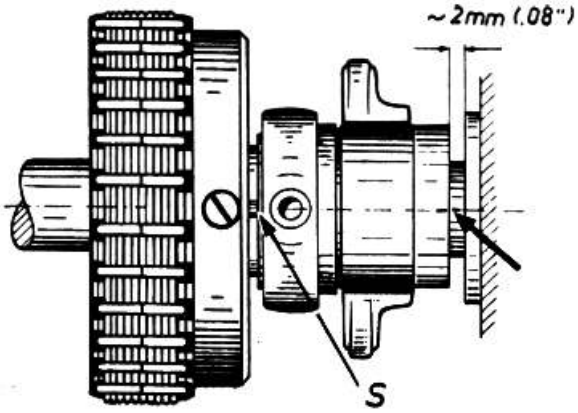

Fig. 76

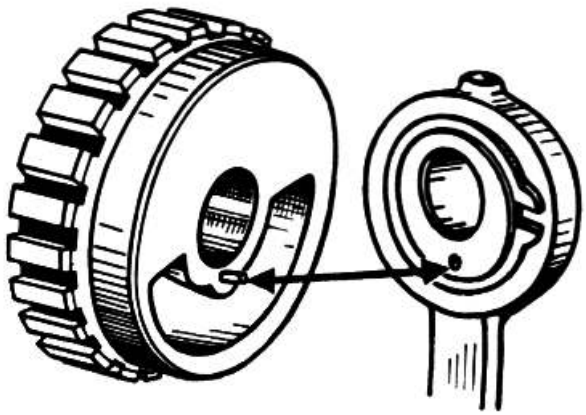

Fig. 77

The Feed Eccentric

Make sure the timing marks on the feed eccentric and on the arm shaft are in line. Push the eccentric to the right until there is a clearance of about 5/64", or 2.0 mm, between it and the rear bearing bushing on the arm shaft (Fig. 76). Tighten the eccentric set screws securely.

The Upper Driving Belt Sprocket

The correct position of the driving belt sprocket on the arm shaft is of eminent importance for the proper balancing of this shaft. Before you adjust the position of the sprocket, take care that the feed eccentric has been set very accurately, as instructed above. To position the sprocket on the arm shaft correctly, push it toward the feed eccentric and make sure that its position pin (which should point toward the balance wheel) enters the borehole in the eccentric (Fig. 77). Then tighten both set screws in the driving belt sprocket securely.

On all machines fitted with a clip belt, the sprocket position pin should engage the small recess S in the collar of the feed eccentric. This recess should be

Downloaded from www.Manualslib.com manuals search engine

exactly in line with the feed eccentric timing mark on the arm shaft. On all machines fitted with a cleated Synchroflex driving belt, the position pin on the upper driving belt sprocket and the timing mark on the arm shaft are offset against each other by 180°.

The Needle Vibrating Eccentric Bevel Gear

This gear is carried on a transverse shaft which can be moved lengthwise of its flanged bushing and is secured in position by a grub screw. The timing mark on the flanged bushing should point upward (Fig. 78).

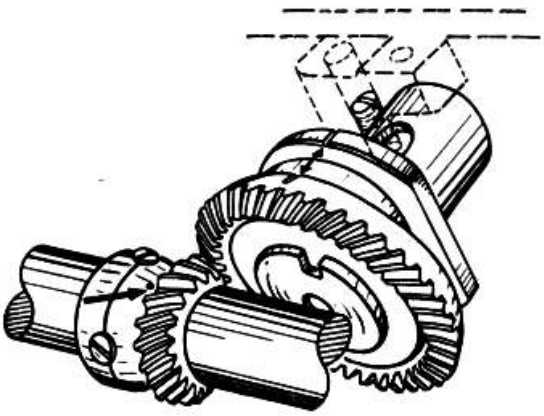

Fig. 78

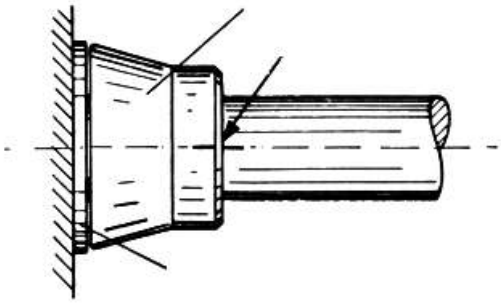

Fig. 79

To ensure that the sideways motion of the needle bar will be completed when the point of the needle has reached a position about 1/4", or 5 to 6 mm, above the needle plate, check the following setting:

Turn the arm shaft until the feed eccentric timing mark is at the top. Loosen the set screws on the arm shaft bevel gear and, while keeping it in mesh with the needle vibrating bevel gear, turn it until the timing mark on the collar of the needle vibrating bevel gear points upward.

In case there is no mark on the needle vibrating bevel gear, hold the arm shaft with its timing mark pointing upward and turn the arm shaft bevel gear until the lobe of the needle vibrating eccentric is at the top.

Move the arm shaft bevel gear on the shaft, as may be required to minimize the amount of play and ensure smooth running of the gears. At the same time, check to see that the gears are set at right angles to each other, and that the ends of their teeth meet in one point. If, after this adjustment, the needle bar frame pitman should jam between the needle vibrating eccentric bevel gear and the flanged bushing, adjust the position of the latter on its shaft. Securely

Downloaded from www.Manualslib.com manuals search engine

tighten both set screws on the arm shaft bevel gear, hold the needle vibrating eccentric bevel gear in proper engagement, and secure the transverse shaft in its position by tightening the grub screw.

To check the above setting, note the following:

The needle vibrating eccentric is set correctly if, with dial A (Fig. 51) set on "0" and the needle bar at its highest position, the latter makes no perceptible sideways motion when finger-tip control F is depressed. For this purpose, the needle position lever must be put in the central notch.

The Driving Eccentric for the Automatic Mechanism

This eccentric performs a dual function. On the one hand, it serves as a set collar which bears against the arm shaft front bushing, and on the other, it serves to drive the automatic embroidery mechanism.

To eliminate any end play, both the needle bar crank and the driving eccentric must be set as close to the arm shaft front bushing as possible, leaving just enough play to permit oil to enter the gap between these parts. Take care, however, that the arm shaft does not turn heavily.

Never attempt to make the arm shaft run smoothly by tapping on the balance wheel. This action is likely to force the arm shaft front bushing out of its mount and cause binding of the parts at the needle-bar end of the machine. When adjusting the end play of the arm shaft, make sure a clearance of .007", or 0.15 to 0.2 mm, is preserved between the balance wheel bushing and the arm shaft rear bushing.

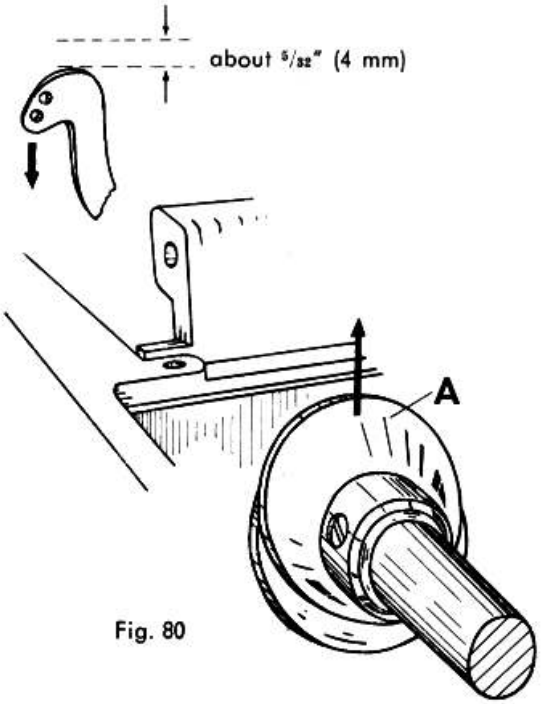

Fig. 80

Timing the Sewing Hook

As the needle rises from the lowest point of its stroke, the needle thread forms a loop on its short-groove side, near the eye, which is entered and enlarged by the point of the sewing hook. The formation of this loop is the first step in producing a stitch. With Pfaff 260 (-261) and 360 (-261) machines this loop has reached the proper size when the needle bar has risen about 5/64", or 2.0 mm, from the lowest point of its stroke. This distance is termed "needle bar rise". The correct amount of needle bar rise, naturally, can be set by trial-

Downloaded from www.Manualslib.com manuals search engine

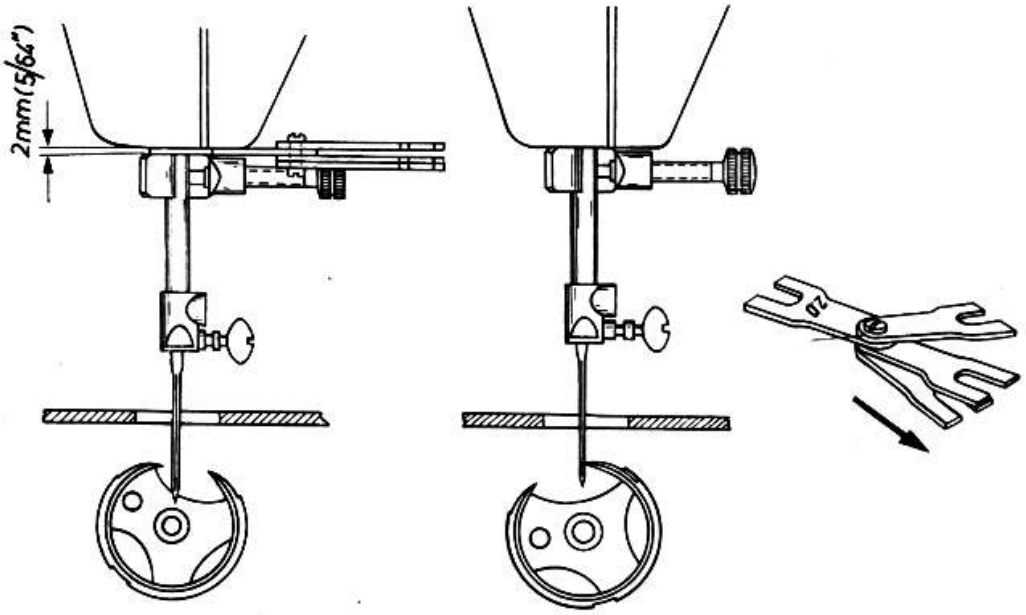

Figs. 81 & 82 Setting the amount of needle bar rise

and-error methods, but the high degree of accuracy required for perfect stitch formation makes it absolutely necessary to use the gauge and clamp made available for this purpose by the factory.

The needle rise gauge may be ordered by No. Z 70.67–1, and a matching clamp by No. Z 70.68-1. By the same token, it is advisable to use gauge needle Z 70.101-4 in setting the sewing hook to the needle. The advantages inherent in this needle are that it eliminates the size tolerances of ordinary sewing machine needles and will not normally be bent.

Pfaff 260

Preparatory to timing the sewing hook, insert the Pfaff gauge needle, or a regular No. 90 needle, into the needle holder, unscrew the needle plate, turn stitch width dial A to "0", and flick the needle position lever to the central notch. Loosen the hook set screws just enough to permit the sewing hook to be turned on its shaft.

Needle Bar Rise

Turn the balance wheel until the needle has reached the lowest point of its stroke. Slip both the clamp and the 5/64", or 2.0 mm, gauge onto the needle bar, positioning the latter between the clamp and the bottom of the casting. Push the clamp up against the gauge and tighten the clamp screw (Fig. 81). This done, pull out the gauge and cautiously turn the balance wheel in sewing direction until the clamp bears against the casting. When in this position, the needle bar has risen 5/64", or 2.0 mm, from the lowest point of its stroke. Now

Downloaded from www.Manualslib.com manuals search engine

turn the sewing hook on its shaft until its point is opposite the center line of the needle. At the same time, set the hook as close to the needle as possible, the proper clearance between both parts being .004", or 0.1 mm. Lightly tighten whichever hook set screw can be reached most easily, and double-check to ascertain that the setting is correct. Then remove the clamp and tighten both hook set screws securely.

The Upper Driving Belt Sprocket

Retiming the sewing hook normally will not alter the position of the lower driving belt sprocket on its shaft. Both helical gears on the hook and hook drive shafts are secured in position by a flat spot or a pin.

For this reason, if the sewing hook should be out of time, check the position of the upper driving belt sprocket (and of the feed eccentric) in relation to the arm shaft. The timing marks on both the sprocket and the arm shaft must be in alignment.

1 = Motor
2 = Motor base plate
3 = Driving belt sprocket
4 = Set screws
5 = Radio interference suppression condenser
6 = Terminal screws
7 = Driving belt (cord)
8 = Grille

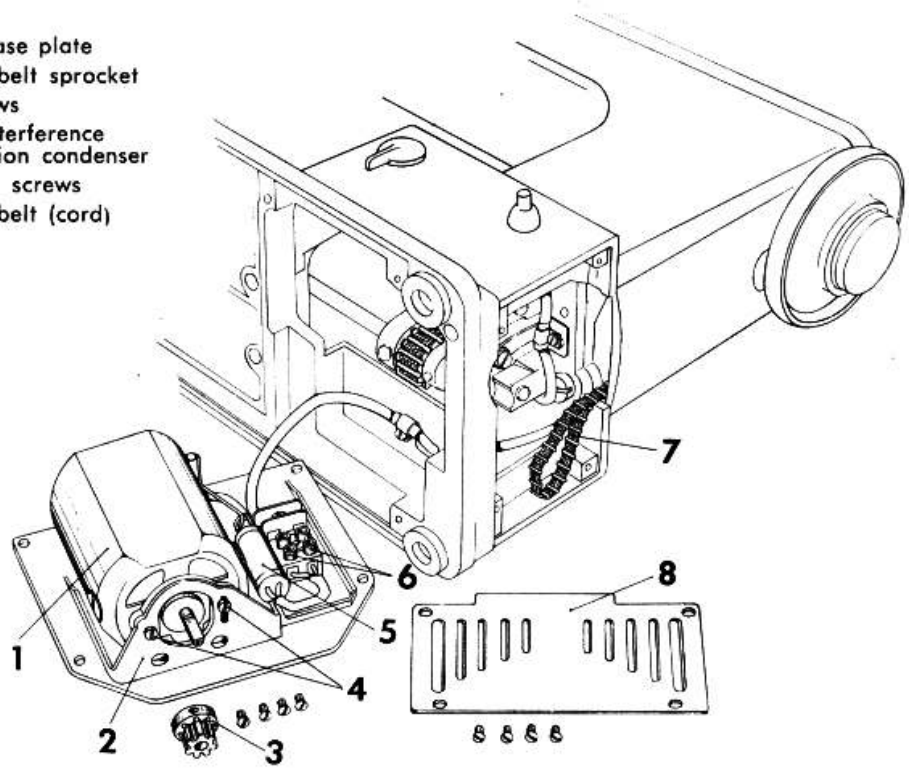

Fig. 83 Demounting the motor base plate on Pfaff 360 machines

Downloaded from www.Manualslib.com manuals search engine

Pfaff 360

The sewing hook of the Pfaff 360 is timed in the same way as the Pfaff 260 hook. It should be kept in mind, however, that the sewing hook of the Pfaff 360 is mounted permanently on the short transverse shaft and, hence, cannot be turned in setting the needle bar rise. For this reason, to time the sewing hook, loosen the lower driving belt sprocket and rotate the long hook drive shaft accordingly. Under no circumstances must the position of the upper driving belt sprocket be changed on the arm shaft. Although this procedure would be much simpler, it would disturb the balance of this shaft.

The set screws on the lower driving belt sprocket can be reached through one of the apertures at the back of the machine base. For a better view of the parts to be adjusted, remove grille 8 (Fig. 83).

If for one reason or another this procedure should prove impractical, proceed as follows: Strip grille 8 (Fig. 83), loosen motor set screws 4, and loosen the set screw on driving belt sprocket 3 a few turns. Lift the motor slightly and pull the sprocket off its shaft. Cautiously tilt the machine back, unscrew motor base plate 2, and lift it out of the machine, pulling it slightly to the left. Disconnect the motor cord from the terminal box and unscrew the cord clip on the machine. This makes all parts in the machine base, including the lower driving belt sprocket, easy of access. It is advisable to loosen the set screws on this sprocket just sufficiently to permit the hook driving shaft to be rotated while the sprocket remains stationary.

Needle Bar Rise

To adjust the needle bar rise, follow the procedure given for the Pfaff 260 (page 49). There is no need to adjust the clearance between the sewing hook and the needle because this distance does not change. When making this adjustment, take care, however, that the lower driving belt sprocket is not moved lengthwise of the hook driving shaft. All dismantled parts are reassembled in reverse order, connecting the motor last. To facilitate the mounting of the motor base plate, tilt the machine back, resting it on a felt pad to prevent the occurrence of scratches.

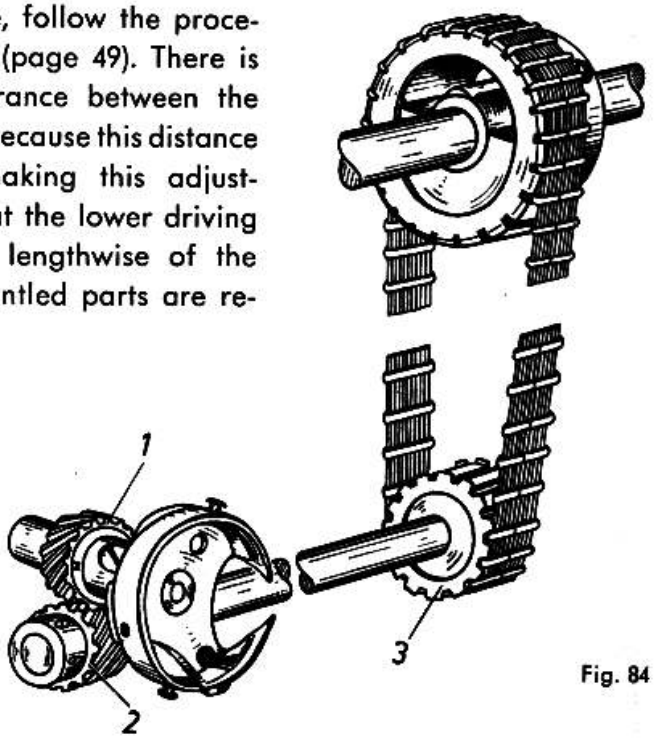

Fig. 84

Downloaded from www.Manualslib.com manuals search engine

Exchanging the Sewing Hook in the Pfaff 360

If it should become necessary to replace a damaged sewing hook, hold the balance wheel, pass a screwdriver through the aperture at the back of the cylinder arm, and take out screw a (Fig. 85). Turn the screwdriver clockwise because this screw has left-hand thread. Next, remove the position finger bracket, and cautiously pull the hook with the hook shaft out of the machine. Make sure though that you remember the position of the sewing hook in the machine.

Fig. 85 Dismantling the Pfaff 360 sewing hook and its shaft

a = Set screw
b = Hook shaft bushing
c = Hook shaft helical gear
d = Spacing washer
e = Hook thread guard
f = Sewing hook
g = Guide bushing

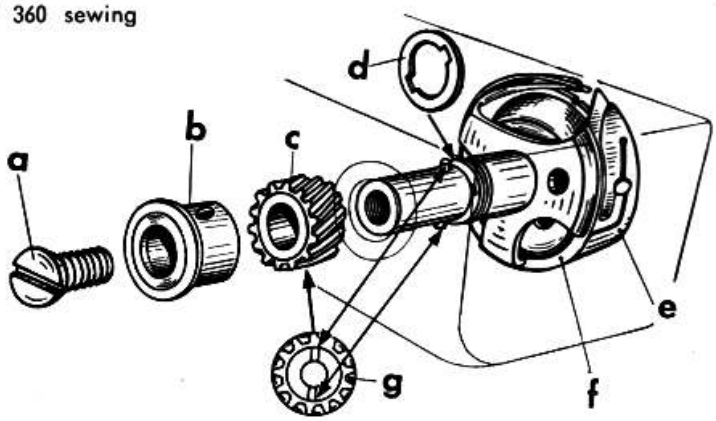

When inserting the new hook, take care that the clearance between the hook point and the needle does not exceed .004", or 0.1 mm. If adjustment is required, add or remove an appropriate number of spacing washers until the correct clearance has been obtained. Replace the hook in exactly the same position which was occupied by the damaged hook before. Insert and tighten the hook set screw, turning it counter-clockwise. Replace and screw down the position finger bracket. To set the needle bar rise, follow the procedure outlined on page 49.

The Position Finger Bracket

After adjusting the clearance between hook point and needle on Pfaff machines 260 and 360, it is absolutely necessary to recheck the position of the position finger bracket. Unhindered passage of the needle thread loop through the clearance gap greatly depends on the position of the bobbin case position finger in the position slot of the bobbin case base. This finger is positioned correctly if there is a clearance of about 1/32", or 0.7 mm, between its tip and the bottom of the position slot (Fig. 86).

Important

If the position finger does not project into the slot far enough, the bobbin case will not be held in place securely. And, conversely, if the position finger bears against the bottom of the slot, the needle thread will jam and break. To adjust

Downloaded from www.Manualslib.com manuals search engine

the position finger accurately, use gauge 8951-100 (Fig. 87). Loosen the set screw in the position finger bracket, and insert the narrow tip of the gauge between the position finger and the bottom of the position slot. Push the position finger bracket forward until it touches the gauge just lightly, then tighten the set screw. The gauge must neither jam nor have excessive play in the slot.

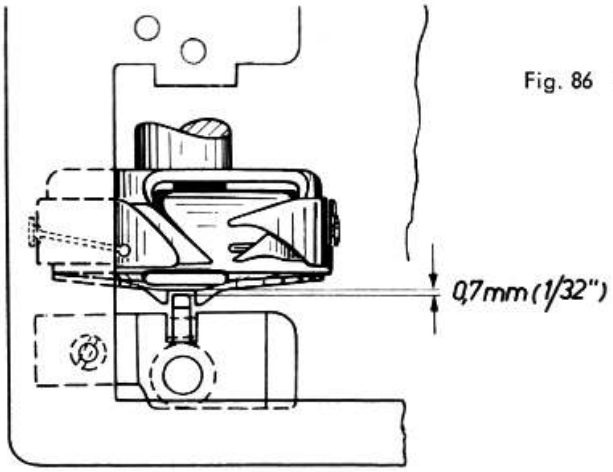

Fig. 86 Adjusting the position finger bracket

Fig. 87 Position finger gauge

Setting the Needle Bar at Correct Height

It is advisable to set the needle bar at the correct height only after the zigzag mechanism and the sewing hook have been adjusted, as instructed above. If the procedure is reversed, it may be impossible to trace an adjustment error made previously.

To set the needle bar at the correct height, remove both the needle plate and the face cover, and insert a No. 90 needle. Set the machine for the widest zigzag stitch, put the needle position lever in the central notch, and rotate the balance wheel until the point of the sewing hook is exactly opposite the center line of the needle when the latter descends on the left of its throw (Fig. 88).

The needle bar is set at the correct height if the hook point is about .02", or 0.5 mm, above the top of the needle eye. To adjust, pass a screwdriver through the aperture in the needle bar frame, loosen needle bar set screw A (Fig. 88), and set the needle bar higher or lower, as may be required. Make sure, however, that the needle bar is not rotated in the process. After this adjustment, tighten the needle bar set screw securely.

Adjusting the Feed Dog in the Feed Slot

Lateral Adjustment

The feed rows should be positioned in the center of the feed slots and must not chafe against the side walls.

Downloaded from www.Manualslib.com manuals search engine

If they are positioned as shown in Fig. 89-1, loosen the two feed dog set screws and adjust.

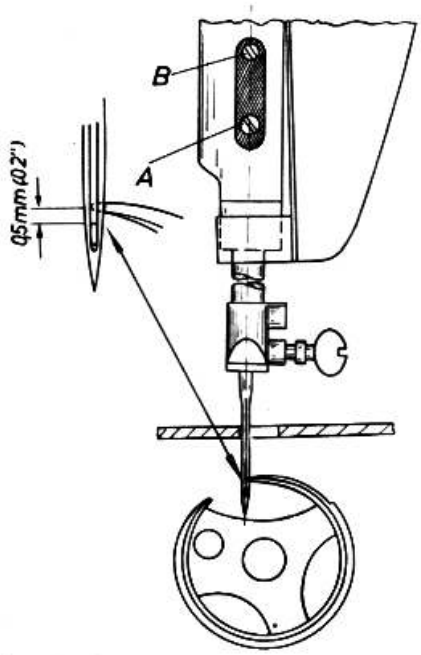

Fig. 88 Setting the needle bar at correct height

If the feed rows are centered improperly and chafe against one side of the feed slots (Fig. 89–3), correct this condition as follows:

On Pfaff 260 machines, loosen the set screws on the feed rock shaft centers, and tap against the shaft with the screwdriver handle until the feed dog is correctly centered in the feed slots. Before you tighten the set screws again, check to make sure that the flat spots on the centers face toward the set screws and that the feed rock shaft has sufficient end play to ensure proper lubrication.

If the feed rock shaft has been moved too much in the process, adjust the position of its rear crank to bring it in line with the feed forked connection and eliminate binding as well as excessive noise.

To remedy this condition on Pfaff 360 machines, the feed bar rather than the entire feed rock shaft has to be adjusted. To do this, remove the needle plate, loosen jam nuts 1 (Fig. 90) and turn the two center screws 2 to adjust the lateral position of the feed dog, as appropriate. When you retighten the jam nuts after the adjustment, take care that the center screws do not turn likewise which may result in jamming the feed bar. To avoid this, hold the center screws in the correct position while you tighten the jam nuts. Make sure the feed bar has sufficient play between the centers to ensure proper lubrication.

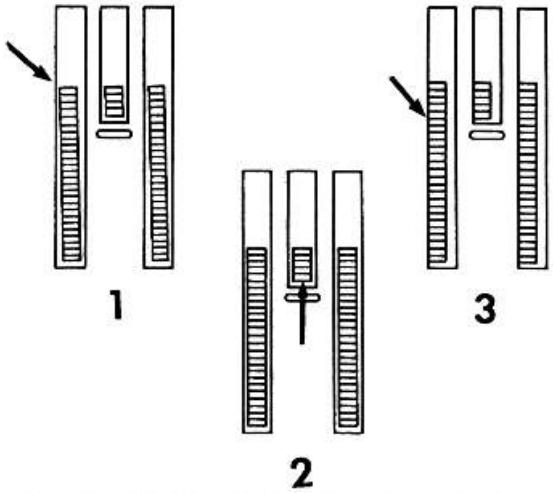

Fig. 89 Adjusting the feed dog in the feed slots

Lengthwise Adjustment

Set the machine for the longest forward stitch. Loosen the binding screw on the feed rock shaft crank, and turn the crank on the shaft so that the central

Downloaded from www.Manualslib.com manuals search engine

feed row will rise as close to the near end of the feed slot as possible. Also make sure that the feed dog will strike neither end of the feed slots when set for the longest forward or backward stitch (Fig. 89-2).

Fig. 90 Adjusting the feed bar on the Pfaff 360

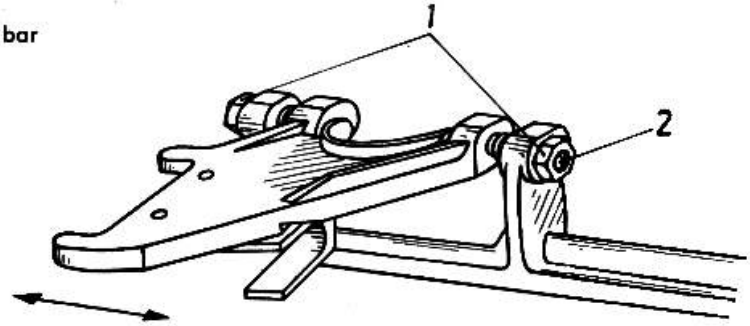

Setting the Presser Bar and the Feed Dog at Correct Height

Use gauge 8760-104 to set both the presser bar and the feed dog at the correct height. This gauge is about 9/32", or 7 mm, high and has a recess 1/32", or 1.0 mm, deep on its underside. The depth of this recess corresponds to the distance the feed teeth should have risen above the needle plate when the feed dog is at its highest position. The height of the gauge corresponds to the correct clearance between needle plate and presser foot when the latter is at its raised position.

To orient the presser bar in relation to the needle, use gauge foot 44088-103. This foot ensures that all sewing feet and attachments will be oriented properly in relation to the centered needle. It should be used in conjunction with gauge needle Z 70.101-4 discussed in the chapter "Timing the Sewing Hook". Since the gauge foot is as high as any other sewing foot, it may be attached to the presser bar for the purpose of setting the latter at the correct height.

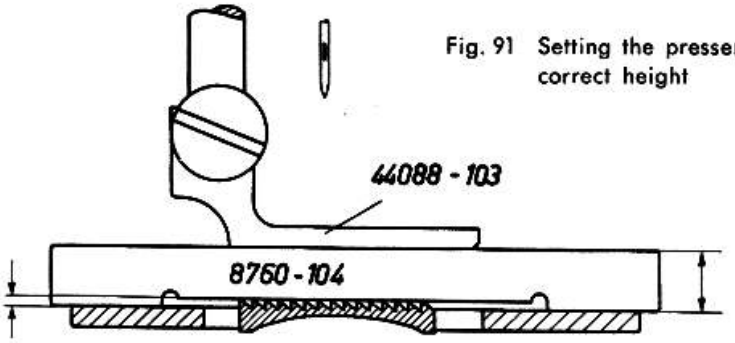

Fig. 91 Setting the presser bar and the feed dog at correct height

The adjustment is made as follows: Unscrew the face cover, insert gauge needle Z 70.101-4, put the needle position lever in the central notch, turn dial A to "0", raise the presser bar, and screw on the gauge foot.

Downloaded from www.Manualslib.com manuals search engine

Loosen the set screw in the presser bar guide collar (Fig. 18-2), and push up the presser bar slightly so that gauge 8760-104, recess down, can be placed between the gauge foot and the needle plate. Now lower the presser bar until the gauge foot touches the surface of the gauge just lightly (Fig. 91), and tighten the set screw in the presser bar guide collar. Lower the presser bar lifter so that the gauge is held in place by the gauge foot. Tilt the machine back, and turn the balance wheel to bring the feed dog to its highest position. Now check whether the feed teeth contact the underside of the recessed portion of the gauge. If adjustment is required, loosen the binding screw and slightly raise or lower the feed lifting shaft front crank. Return the machine to its normal position, raise the presser bar, remove the gauge, and tighten the binding screw.

With Pfaff 360 machines, the height of the feed dog is adjusted in the same manner. To get at the feed lifting shaft front crank, remove the needle plate.

In order to adjust the lateral position of the presser foot, loosen the set screw in the presser bar guide collar, and cautiously lower the needle bar. Check to see that the thick top portion of the gauge needle shaft passes through the needle hole in the gauge foot, without being deflected. This is the most important requirement that has to be met in adjusting the lateral position of the presser foot. In addition, it is desirable to set the gauge foot so that its left edge runs parallel to the edge of the feed slot. After the adjustment, tighten the set screw in the presser bar guide collar for good.

Fig. 92

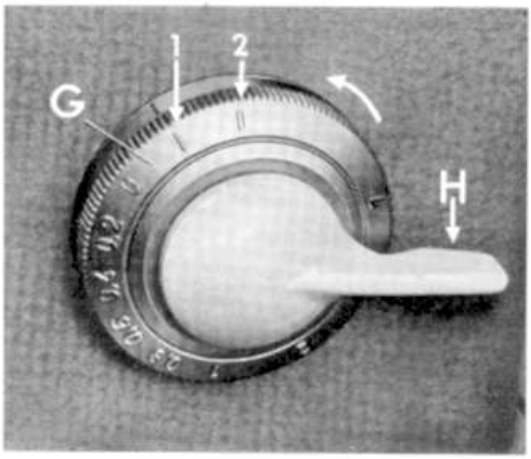

Dismantling, Replacing and Adjusting the Stitch Length Control

Disconnect the tension spring (106123) from the feed regulator (106120). This spring is located underneath the bobbin winder. Set stitch length dial F on "4" and depress finger-tip control H (Fig. 92). Loosen sufficiently the set screw (1325) of the stitch length regulator mechanism (106198) which can be reached from the underside of the bedplate. Pull out the stitch length regulator mechanism and disconnect the feed regulator connection (106618).

To replace the stitch length regulator mechanism in the machine, reverse the above procedure.

Adjustment is performed as follows:

Downloaded from www.Manualslib.com manuals search engine

Set stitch length dial G on "0" and run the machine. Check to see that the feed dog moves up and down, but does not move back and forth. If adjustment is required, rotate the stitch length regulator mechanism to the right or left, as appropriate. Do not forget to tighten the set screw securely which holds the mechanism in place.

Adjustment of the stitch length regulator mechanism is greatly facilitated by wrench No. 106300-304 which can be obtained from Pfaff at extra cost.

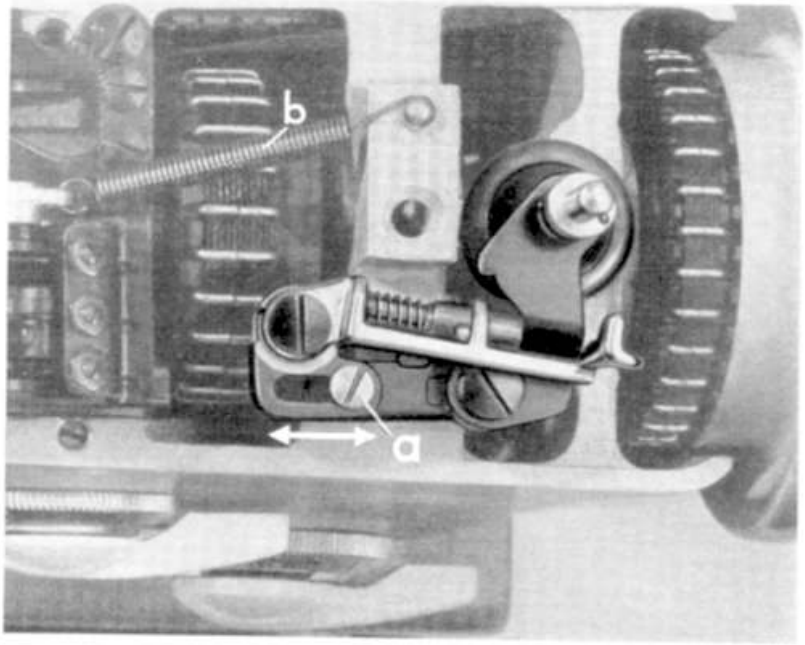

Fig. 93
Adjusting the bobbin winder

Adjusting the Bobbin Winder

Each bobbin winder is adjusted and tested at the factory with utmost accuracy in order to ensure even bobbin winding. If thread should pile up at one end of the bobbin, this may be an indication that force was applied in removing or replacing the top cover. As a result, the bobbin winder frame may have been bent out of shape and the bobbin winder spindle may be no longer in a vertical position.

If thread piles up at the top end, the spindle has been bent to the left; and, conversely, if thread piles up at the bottom end, the spindle has been bent to the right.

To remedy this condition, straighten the bobbin winder frame. On recent machines, the bobbin winder frame has been reinforced so that it will not normally be bent out of shape.

After this adjustment has been performed, the lateral position of the bobbin winder is adjusted in relation to the balance wheel. To do this, loosen set screw a in the bobbin winder frame base (Fig. 93) and move the latter over to the balance wheel until the rubber ring on the winder pulley just contacts the inner surface of the balance wheel and is driven securely when the bobbin winder is engaged. Excessive pressure exerted on the balance wheel by the bobbin winder pulley will result in heavy working of the machine and premature wear of the rubber ring.

Downloaded from www.Manualslib.com manuals search engine

Setting the Needle Threader

Begin by establishing the correct vertical position of the stop (105361) on the needle bar. To do this, remove the face cover and bring the needle bar to its highest position. Then move the threader bar frame all the way down and check to see that the pin (1897) rides in the oblique slot in the threader bar frame from one end to the other, and that there is a clearance of about .02", or 0.5 mm, between the lower end of the threader bar frame and the lower bearing of the threader bar (Fig. 94). The stop is at the correct height, if these conditions are met. Adjustment can be made by setting the needle bar 5/64", or 2.0 mm, above the bottom of its stroke and loosening screw B (Fig. 88), which can be reached through the elongated hole in the needle bar frame. Adjust the position of the stop, as appropriate, and tighten screw B securely.

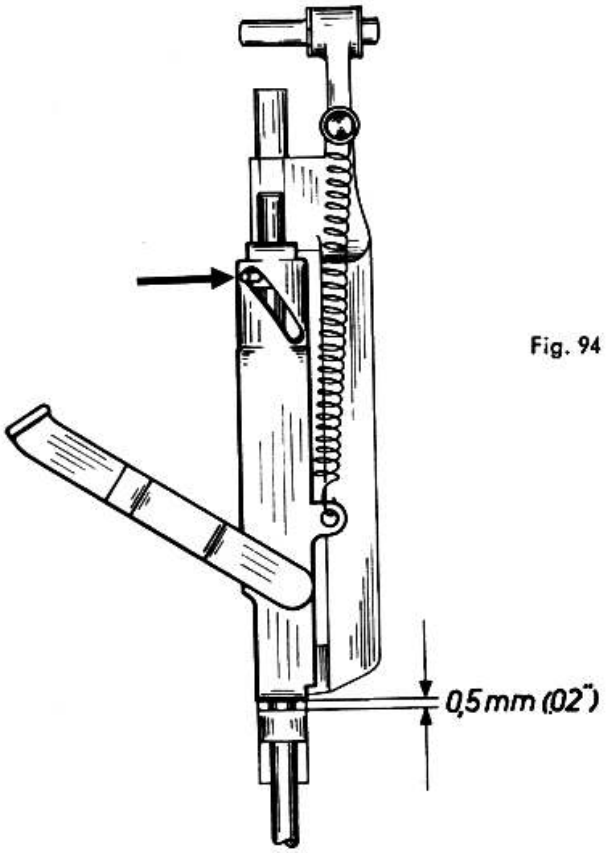

Fig. 94 Setting the needle threader

To replace the face cover, follow the instructions given on page 39.

Again bring the needle bar to its highest point, insert a No. 70 needle, and proceed to adjust the threader head (105354).

To perform this setting correctly, keep the threader bar at its lower position by the spring shown in Fig. 95 while you attach and adjust the threader head.

Downloaded from www.Manualslib.com manuals search engine

Fig. 95 Retaining spring keeps threader lever at its lower position

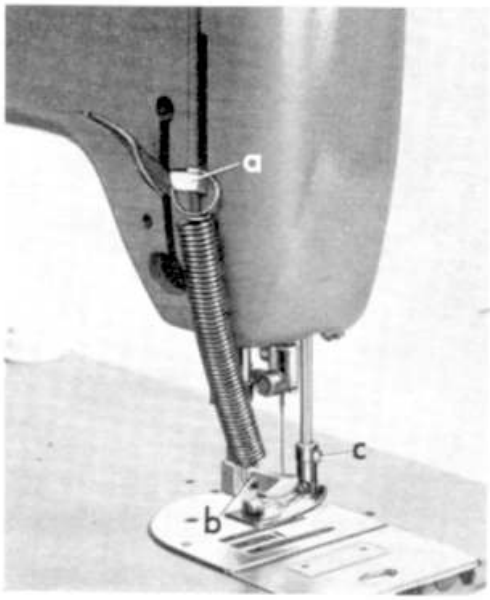

Fig. 96 Needle threader prong W

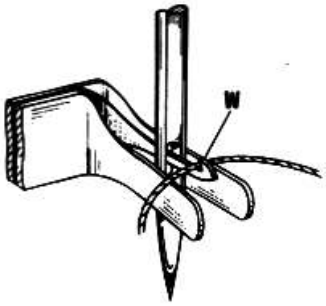

The most important adjustment is that of the threader prong height. Prong W should pass through the needle eye as close to its top as possible. The reason for this is that the needle eye grows larger toward the needle point as the needle size increases, while the distance from the top of the needle eye to the end of the needle shank remains the same, regardless of the needle size.

Place the threader head on the threader bar and turn it toward the needle so that prong W will pass freely through the needle eye. Also make sure prong W protrudes sufficiently from the needle eye to permit secure placement of the thread behind the prong (Fig. 96).

If prong W is not positioned correctly, loosen the set screw (1149) on the threader head and turn the prong to the right or left until its tip passes through the needle eye without deflecting the needle. After the adjustment, tighten the set screw securely.

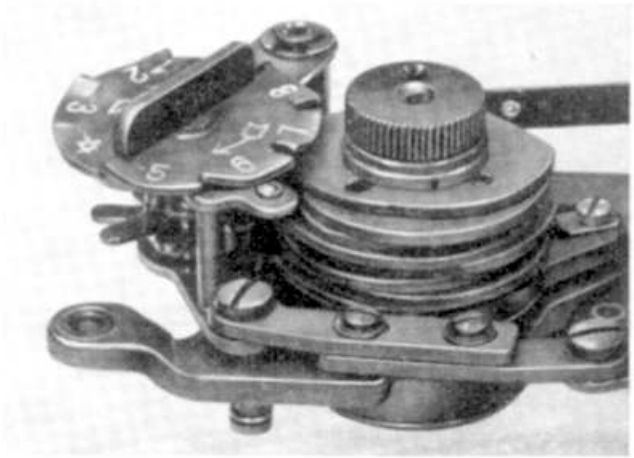

Fig. 97 The heart of the Automatic – the cam assembly

Downloaded from www.Manualslib.com manuals search engine

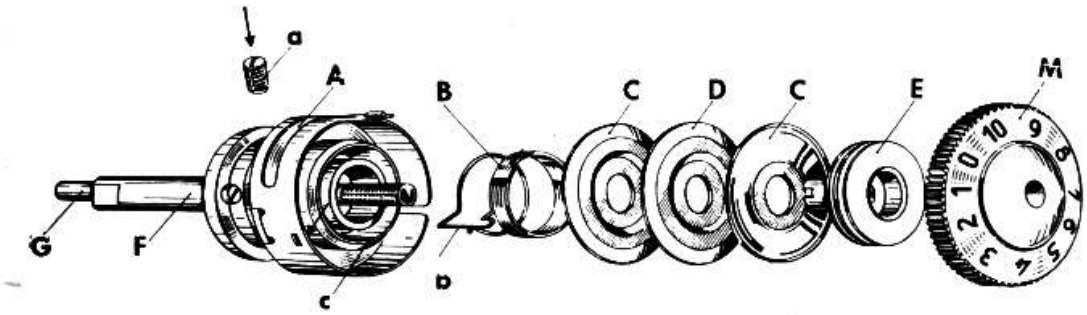

Fig. 98 Component parts of the needle thread tension

a = Set screw
b = Thread check spring loop
c = Thread check spring regulator
E = Tension spring, with spring assembly
F = Tension stud
G = Tension release plunger
M = Tension dial
A = Tension barrel
B = Thread check spring
C = Tension discs
D = Central tension disc

Changing the Thread Check Spring

To replace a broken thread check spring, remove the top cover, loosen set screw a (Fig. 98) sufficiently to permit the removal of tension barrel A, and pull the latter out of the machine. Loosen the set screw (701316) in the tension barrel, and screw tension stud F out of tension dial M, so that spring assembly E, tension discs C and D, as well as thread check spring B can be withdrawn. Replace the broken thread check spring by a new one.

Push tension discs C and D as well as spring assembly E on tension stud F, making sure that the spring assembly is positioned on the stud next to the tension dial, and that the bent end of thread check spring B enters the appropriate slot in the tension barrel. Then cautiously lift loop b of the thread check spring over the small finger in the tension barrel.

Screw tension dial M onto tension stud F just a few turns. Turn tension dial M so that the red tip of the tension barrel is positioned between "0" and "1" on tension dial M. Pull a No. 30 thread between the tension discs, and turn tension stud F far enough into tension dial M to produce a light tension on the thread. Take care that the position of tension dial M is not changed in the process. Tighten the tension stud set screw again.

If you now turn the tension dial so that the red tip is opposite "3" and "4", the tension must be normal.

Insert tension release pin G, lower the presser bar lifter, and replace the complete thread tension assembly, making sure that the red mark points up. Tighten set screw a securely. To tension the thread check spring, loosen the set screw in the slot next to the red mark, and turn thread check spring regulator c to the left, as may be required. After the adjustment, tighten the set screw securely again.

Downloaded from www.Manualslib.com manuals search engine

Changing the Cord Belt

1. on machines with pinned balance wheel bushing:

a. Remove the face and top covers, and strip the presser bar assembly.

b. Take out the eccentric stud connecting the needle bar frame pitman to the needle bar frame, and swing the latter up.

c. Strip the remaining front parts, such as the take-up lever.

d. Knock the pin out of the needle bar crank and pull this crank off the arm shaft, without applying force.

e. Loosen the set screws in the driving eccentric for the automatic embroidery mechanism, the arm shaft bevel gear, upper driving belt sprocket, and feed eccentric.

f. Pull the arm shaft to the right until its left end is in line with the upper driving belt sprocket, and change the cord belt.

To assemble, reverse the above procedure. Take care that all parts are replaced in line with the appropriate timing marks.

2. on machines with pinned arm shaft bushing (Fig. 99):

a. Knock the pin out of the balance wheel bushing and pull the bushing off the arm shaft. In this case, the needle bar crank remains pinned on the arm shaft.

b. Having completed the preparations mentioned in par. 1 above, the arm shaft is pulled forward, i. e. toward the needle-bar end of the machine, until its right end is in line with the upper driving belt sprocket.

c. Replace the old cord belt by a new one.

To assemble, proceed in the reverse order. Take care that all parts are replaced in line with the appropriate timing marks.

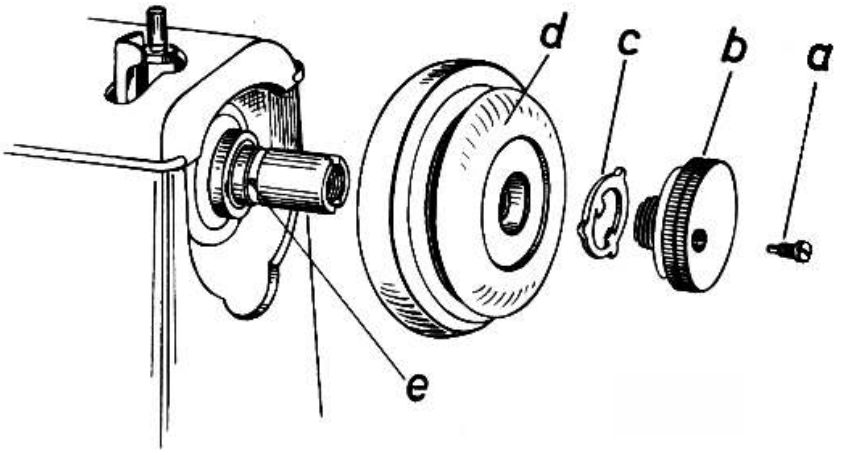

Fig. 99 Removing the balance wheel

Downloaded from www.Manualslib.com manuals search engine

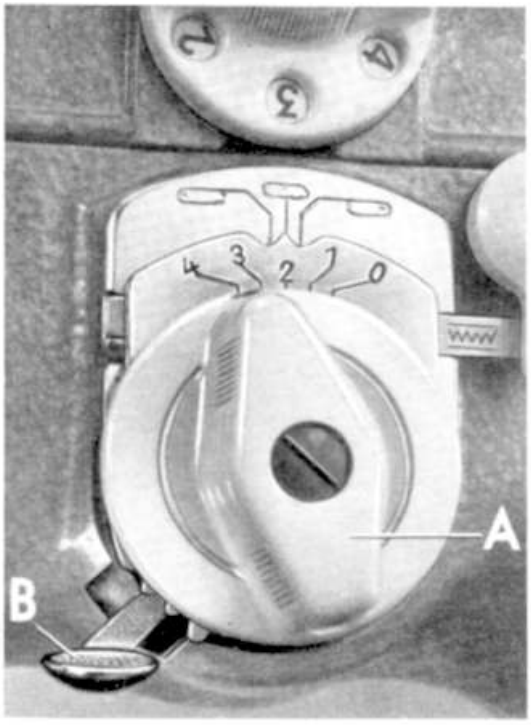

Fig. 100 Stitch width knob of the Pfaff 230 (332) (previous model)

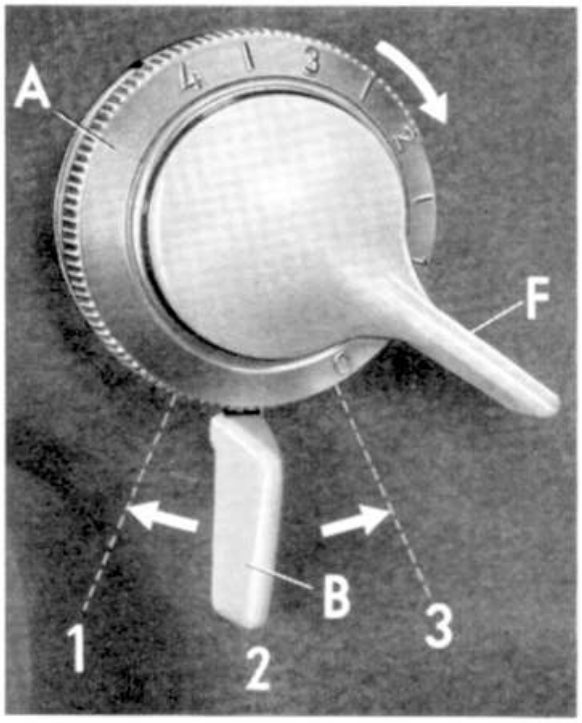

Fig. 101 Stitch width control of the Pfaff 260 (360) (present model)

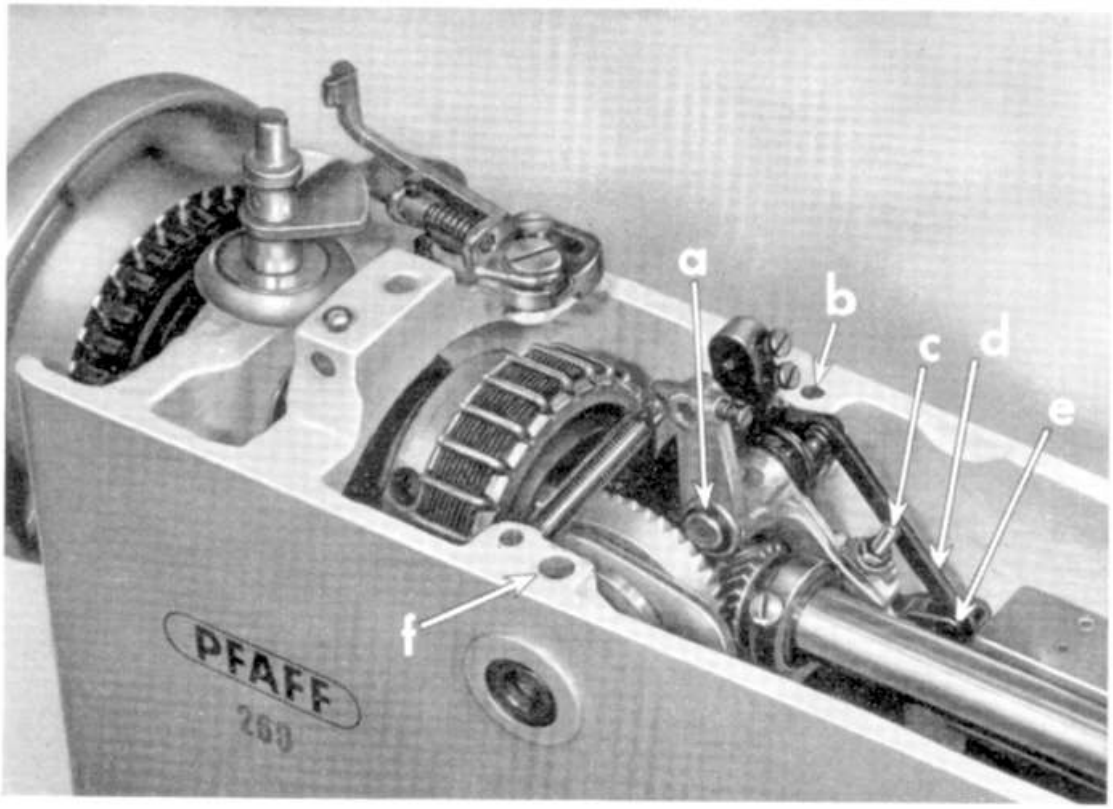

Fig. 102 Stripping the automatic embroidery mechanism

Downloaded from www.Manualslib.com manuals search engine

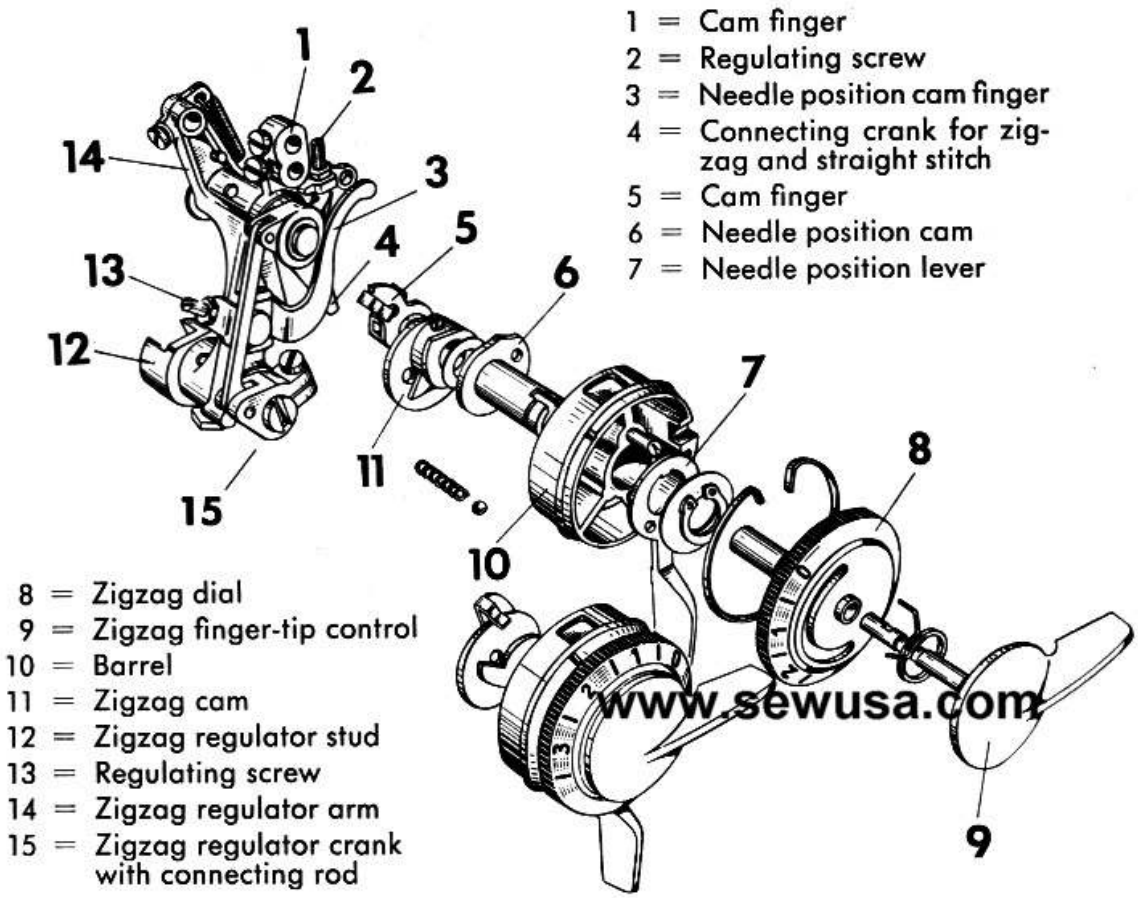

Fig. 103 Zigzag regulator mechanism of the Pfaff 260 (360)

Assembling and Adjusting the Zigzag Regulator Mechanism

The main difference between Pfaff machines 260 and 360 (260-261 and 360-261), on the one hand, and the former Pfaff 230 and 332 (230-260 and 332-260), on the other hand, lies in the redesigned stitch length and stitch width controls with which the new machines are equipped.

Striking features of these mechanisms are:

(1) the enclosed design of the housing,

(2) the precision adjustment of stitch length and stitch width, and

(3) the finger-tip control permitting instantaneous changing over from forward to backward, or from straight to zigzag stitching, and vice versa.

The redesigned controls incorporated in the new machines necessitate different disassembly, assembly and adjustment procedures than where required for the previous models. Needless to say that all these jobs must be carried out most conscientiously and accurately because the proper functioning of the machine depends on its correct setting.

In assembling the machine at the factory, the components of the stitch length and stitch width controls are pre-assembled and inserted in a housing, or barrel. This unit is then inserted in the machine arm or the arm standard.

Downloaded from www.Manualslib.com manuals search engine

The Zigzag Regulator Mechanism

The zigzag regulator mechanism (Fig. 101) embraces the stitch width regulating mechanism in the machine arm and the stitch width control on the outside of the machine arm.

The stitch width control comprises

stitch width dial A,

zigzag finger-tip control F, and

needle position lever B.

Before you strip the stitch width control, it is advisable to make an inconspicuous mark on the machine arm opposite the red mark on the zigzag regulator barrel.

Stripping the Automatic Mechanism

If the machine is equipped with an automatic embroidery mechanism, this must be stripped before the zigzag regulator mechanism can be removed from the machine. To do this, proceed as follows:

Disconnect tension spring m (Fig. 51) from the zigzag regulator arm (106178), and unscrew pressure spring assembly o. Take out the screws in the base, and lift the automatic embroidery mechanism out, without applying force. Turn stitch width dial A to "4", and loosen the set screws on the three engaging lever eccentric studs. Pull out the eccentric stud of rear engaging lever d 1. Set stitch width dial A on "0", and strip engaging levers d 2 and d 3. To replace the automatic embroidery mechanism, simply proceed in reversed sequence (see also page 71).

Dismantling the Stitch Width Control

Turn stitch width dial A to "0";

set needle position lever B at its central position;

turn out the set screw (b in Fig. 102) on the zigzag regulator barrel which can be reached from above;

push up finger-tip control F;

shove the stitch width regulating mechanism in the arm to the left;

turn the barrel slightly to the right, and pull it out cautiously, without applying force. If desired, tool No. 106300-303 can be supplied by Pfaff at extra cost. This tool serves to facilitate the turning and removing of the barrel.

The Stitch Width Regulating Mechanism in the Machine Arm

The stitch width regulating mechanism in the machine arm essentially comprises the following components:

Zigzag regulator arm 14 (Fig. 103) with zigzag regulator stud 12, zigzag regulator crank 15 with connecting rod, and hinge stud (106179).

Downloaded from www.Manualslib.com manuals search engine

To strip the mechanism, proceed as follows:

Disconnect both tension springs (106134 and 106172),

remove slip washer a (Fig. 102) from the hinge stud (with the aid of circlip pliers),

loosen hinge stud set screw b and press the hinge stud out, and

remove the stitch width regulating mechanism as a unit, without applying force.

To replace the component parts in the stitch width regulating mechanism, proceed in reversed sequence.

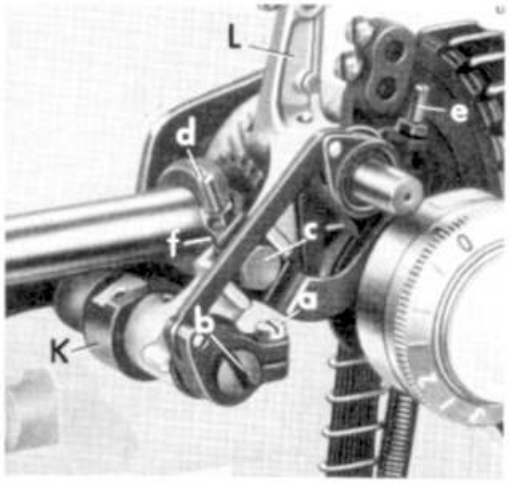

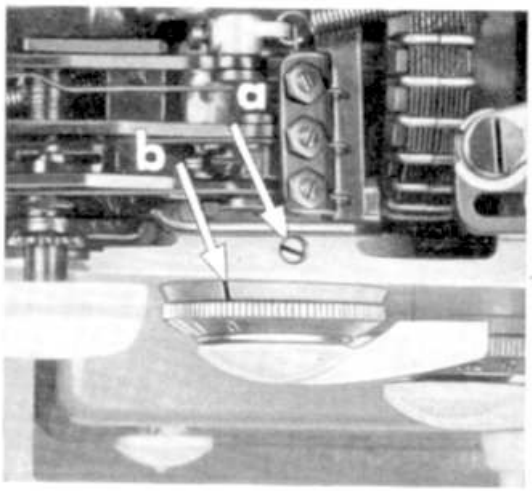

Figs. 104 & 105 Zeroing and centering the needle

The Stitch Width Control

Push the tension spring connected to cam finger 1 (Fig. 103) through the round aperture in the front wall of the machine arm and attach it to the spring suspension bracket (106169).

Turn stitch width dial A until "0" is opposite the red mark on the barrel, and put needle position lever B in the central notch.

Put a few drops of oil on the barrel.

Shove the stitch width regulating mechanism in the machine arm to the left.

Insert the barrel into the machine arm cautiously, turning it slightly to the right, then to the left.

Rotate the barrel until the red mark on its rim is in line with the mark made on the machine arm beforehand.

Cautiously tighten the set screw on the barrel, and check to see that stitch width dial A as well as levers B and F turn smoothly (Fig. 101).

Downloaded from www.Manualslib.com manuals search engine

Do not apply force in replacing the barrel as this might cause bending of the cam fingers in the stitch width regulating mechanism which, in turn, might cause hard working of this mechanism. The same trouble is likely to occur if the barrel is pushed in, or stands out, too far.

If no mark has been made on the machine arm beforehand, turn the zigzag regulator barrel until

a. an imaginary line drawn through the red mark h on the barrel (Fig. 51) passes to the right of the hinge stud located above it, and

b. needle position lever B points downward when set at its central position.

In all three needle positions, the rounded tip of the needle position cam finger should be located in the middle of the respective section of the needle position cam.

To double-check this setting, slightly move the needle position lever to the right and left of its central position and check to see that the zigzag regulator arm does not vibrate. Repeat this check with the needle position lever set at its left and right positions, respectively.

While on previous machines, the barrel must be pushed into the machine arm until the set screw enters the small groove in its rim, on recent machines, it must be pushed in as far as it will go.

If stitch width dial A should turn heavily on older machines, loosen the set screw and either push in or pull out the barrel slightly. Then tighten the set screw securely.

Replace the second tension spring (b in Fig. 93).

Adjusting the Stitch Width Control
(See also page 88)

To check the correct position of the zigzag regulator barrel in the machine arm, turn stitch width dial A to "0".

The sideways movement of the connecting rod (105193) must not begin until stitch width dial A has been turned clockwise by three or four knurls.

As you depress finger-tip control F, the connecting rod should move likewise.

If these conditions are not met, correct the position of the barrel in the machine arm.

After the above-mentioned adjustment has been made, also check to see that

a. needle position lever B points downward when set at its central position,

b. the lobe of eccentric stud B (Fig. 106) points toward the balance wheel and the needle bar frame pitman is at its extreme right-hand position,

Downloaded from www.Manualslib.com manuals search engine

c. the lobe of eccentric stud A in the needle bar frame (Fig. 107) points upward, and

d. the clearance at f (Fig. 104) is 5/32", or 4 mm.

Important

The needle of a zigzag sewing machine must not make any sideways motion when it is down in the goods.

Rough Adjustment of Zigzag Stitch

Turn the needle bar crank until its lobe points upward. Rotate the needle vibrating eccentric bevel gear and the feed eccentric so that their timing marks are at the top. Now mesh both bevel gears so that they rotate smoothly without having any play.

Fine Adjustment of Zigzag Stitch

With the machine set for the widest stitch width, the descending needle should cease vibrating when its point has reached a position about 5/32" to 1/4", or 4 to 6 mm, above the needle plate.

If fine adjustment is required, turn the bevel gear on the arm shaft, as appropriate (see also the second paragraph on page 48).

As you make this adjustment, take care that you do not disturb the correct meshing of the bevel gears and that you preserve the correct amount of play.

Zeroing the Needle for Straight Stitching

While at the factory this adjustment is performed with the aid of a dial gauge, our service personnel in the field should best follow the procedure outlined below:

a. **Using Finger-Tip Control F**

Insert a new No. 80 needle, attach the buttonhole foot, and drop the feed dog. Place a piece of white cardboard between the needle plate and the sewing foot. Now

turn stitch width dial A to "4",
set needle position lever B at its central position, and
push finger-tip control F up.

Turn the balance wheel forward, then backward, and let the needle stitch into the cardboard lightly. The needle is zeroed correctly if it stitches into the same spot twice, without being deflected.

Downloaded from www.Manualslib.com manuals search engine

If adjustment is required, loosen binding screw a on the zigzag regulator crank (Fig. 104) just sufficiently to permit turning zigzag regulator stud b to the right or left with the aid of a small screwdriver, as may be required to eliminate any sideways motion of the needle. Adjust while the machine is running.

To double-check this setting, repeat the above-mentioned cardboard test.

b. **Using Stitch Width Dial A**

Turn stitch width dial A to "0" and put needle position lever B in the central notch.

With the machine set as indicated above, the needle bar must not make any sideways motion.

If no dial gauge is available, run the machine and touch the needle bar frame with your fingers to determine whether it swings sideways or not.

Adjustment is performed by turning regulating screw e on the needle position cam finger (Fig. 104) in or out, as may be required to meet the above conditions. Loosen the lock nut before you make the adjustment and do not forget to tighten it firmly thereafter.

Adjusting the Needle Position

Turn stitch width dial A to "4" and put needle position lever B in the left notch. *)

Turn the balance wheel until the needle descends on the left of its throw. Check to see that the needle makes no perceptible sideways motion when you push up finger-tip control F, and that it stitches into the same spot, regardless whether stitch width dial A is set on "4" or needle position lever B at its right and left positions, respectively.

If the needle swings sideways, and only then, the position of needle position cam finger 3 (Fig. 103) must be adjusted .

Loosen both the lock nut on regulating screw d (Fig. 104) and hexagon screw c on the needle position cam finger.

As you operate finger-tip control F, turn regulating screw d in or out, as may be required to eliminate any sideways motion of the needle.

After the adjustment, make sure you tighten the lock nut on regulating screw d and hexagon screw c securely.

To double-check this setting, flick the needle position lever to the left and right positions, respectively, and check to see that the needle makes no sideways motion.

Special care must be taken in adjusting the needle at its left position because this needle position is used for buttonhole sewing.

*) Or turn stitch width dial A to "0" and depress finger-tip control F.

Downloaded from www.Manualslib.com manuals search engine

Centering the Needle in the Needle Plate Slot

a. **Centering the Needle Throw in the Needle Plate Slot**
Set stitch width dial A on "4" and put needle position lever B in the central notch.

Descending on the right and left of its throw, the needle must clear both ends of the needle plate slot at the same distance and must not rub against the needle plate.

To adjust, turn eccentric stud A in needle bar frame pitman (Fig. 107) to the right or left, as may be required to meet this condition.

b. **Adjusting the Needle Throw in Relation to the Center Line**
Set stitch width dial A on "0" and needle position lever B at its central position. Place a piece of cardboard under the needle and turn the balance wheel until the needle stitches into it lightly. Turn stitch width dial A to "4" and turn the balance wheel forward, then backward, until the needle, on the right and left of its throw, stitches into the cardboard again.

Check to see that the right and left punctures are equidistant from the central puncture (Fig. 106, bottom).

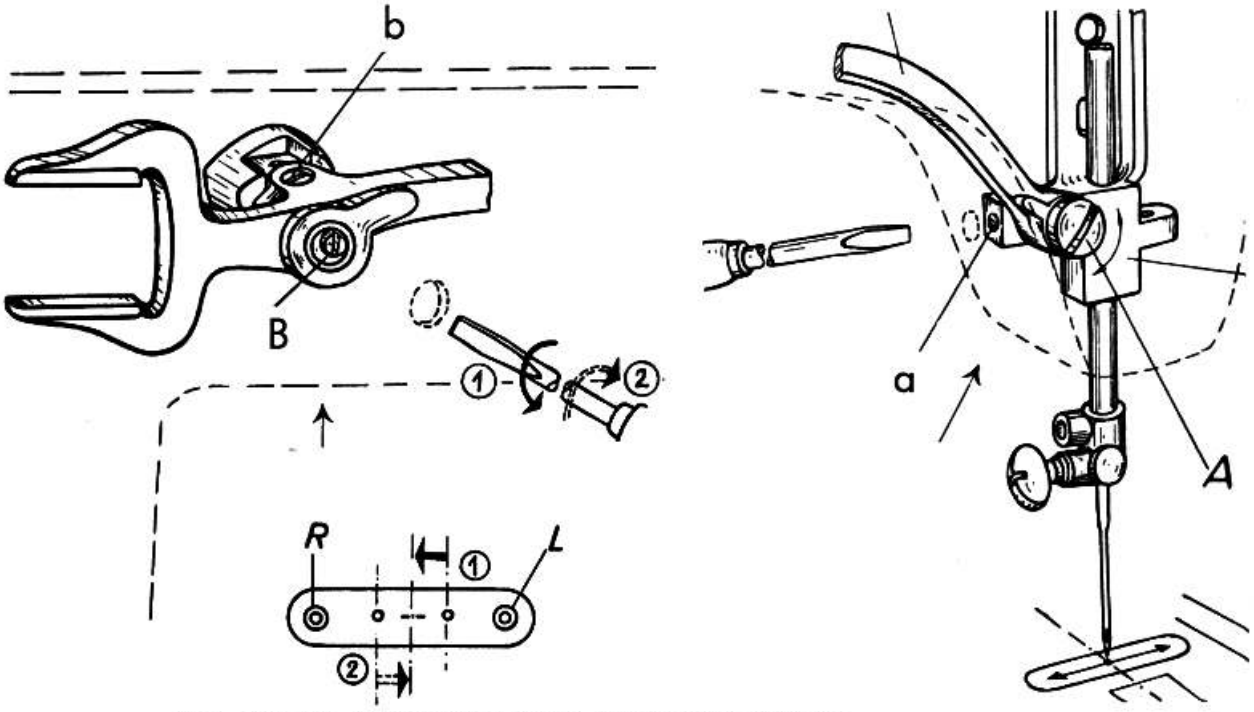

Figs. 106 & 107 Centering the needle in the needle plate slot
(in both drawings the machine is pictured as seen from the rear)

Downloaded from www.Manualslib.com manuals search engine

If adjustment is required, turn eccentric stud B (Fig. 106) to the right or left, as appropriate.

c. **Centering the Needle in the Needle Plate Slot**

Set stitch width dial A on "0" and needle position lever B at its central position.

Check to see that the needle is correctly centered in the needle plate slot.

To adjust, turn eccentric stud A in the needle bar frame pitman (Fig. 107) to the right or left until the above-mentioned condition is met.

Important

Since settings a, b, and c are correlated, repeat each check and, if necessary, readjust.

After the adjustment has been completed, tighten all set screws securely.

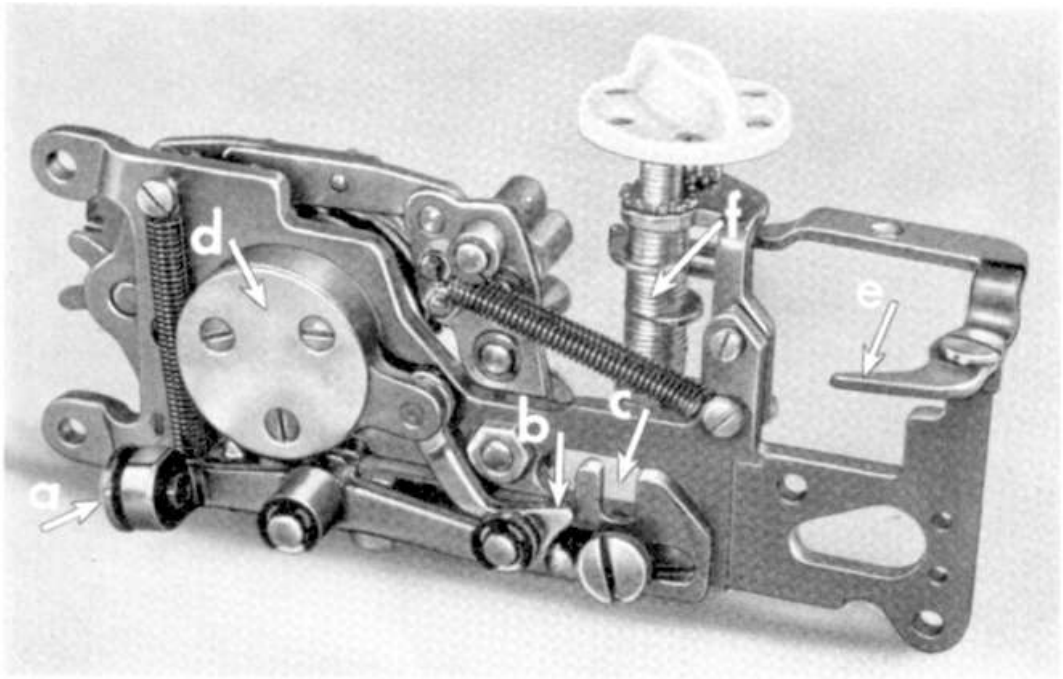

Fig. 109 Underside of the automatic embroidery mechanism

Downloaded from www.Manualslib.com manuals search engine

Converting a Pfaff 260 (360) into a Pfaff 260-261 (360-261)

Both the Pfaff 260 and the Pfaff 360 are so designed that an automatic embroidery mechanism can be installed at any time. The following hints are intended to facilitate the conversion job and should be strictly adhered to in order to eliminate, right from the beginning, all sewing troubles which may be caused by errors in installing and adjusting this unit.

The various assemblies of the automatic embroidery mechanism are shown in a drawing on page 72. All essential parts are identified by numbers and, hence, can be located easily. Adjustments which were covered in greater detail earlier in this manual will in the following be dealt with but briefly.

Installing the Automatic Mechanism

Remove the top cover and check the position of the driving eccentric on the arm shaft. The driving eccentric is positioned correctly if its timing mark is in line with the timing mark on the arm shaft. It should be noted that this driving eccentric performs a dual function as an eccentric and a set collar. In its latter capacity, it serves to fix the position of the arm shaft lengthwise of the machine arm. Therefore, if you have to adjust the position of the driving eccentric, take care that the arm shaft does not have any end play and that the machine does not work heavily.

Driving eccentrics that have no timing marks are set as follows:

Turn the balance wheel in sewing direction until the take-up lever has passed the highest point of its stroke and descended $^5/_{32}$", or 4 mm. With the arm shaft in this position, the lobe of the driving eccentric should point upward (Fig. 80). Tighten both set screws securely.

Mounting the Engaging Levers

Begin by mounting the front engaging lever. To do this, turn stitch width dial A to "0", and insert the eccentric stud into the lower hole of cam finger 34 (Fig. 110) from the front. Turn the stud so that its lobe is at the top, and tighten the set screw. This engaging lever controls the full stitch width.

To insert the central engaging lever, set stitch width dial A on "0". Insert the eccentric stud into the upper hole of cam finger 34 (Fig. 110) from the back. Turn the stud so that its lobe is at the top, and tighten the screw. This engaging lever controls half the stitch width.

To insert the rear engaging lever, turn stitch width dial A to "4" and flick needle position lever B to the left notch. Insert the eccentric stud into the hole at the top of zigzag regulator arm 32 (Fig. 110), and turn it so that its lobe points upward. Tighten the set screw securely.

Downloaded from www.Manualslib.com manuals search engine

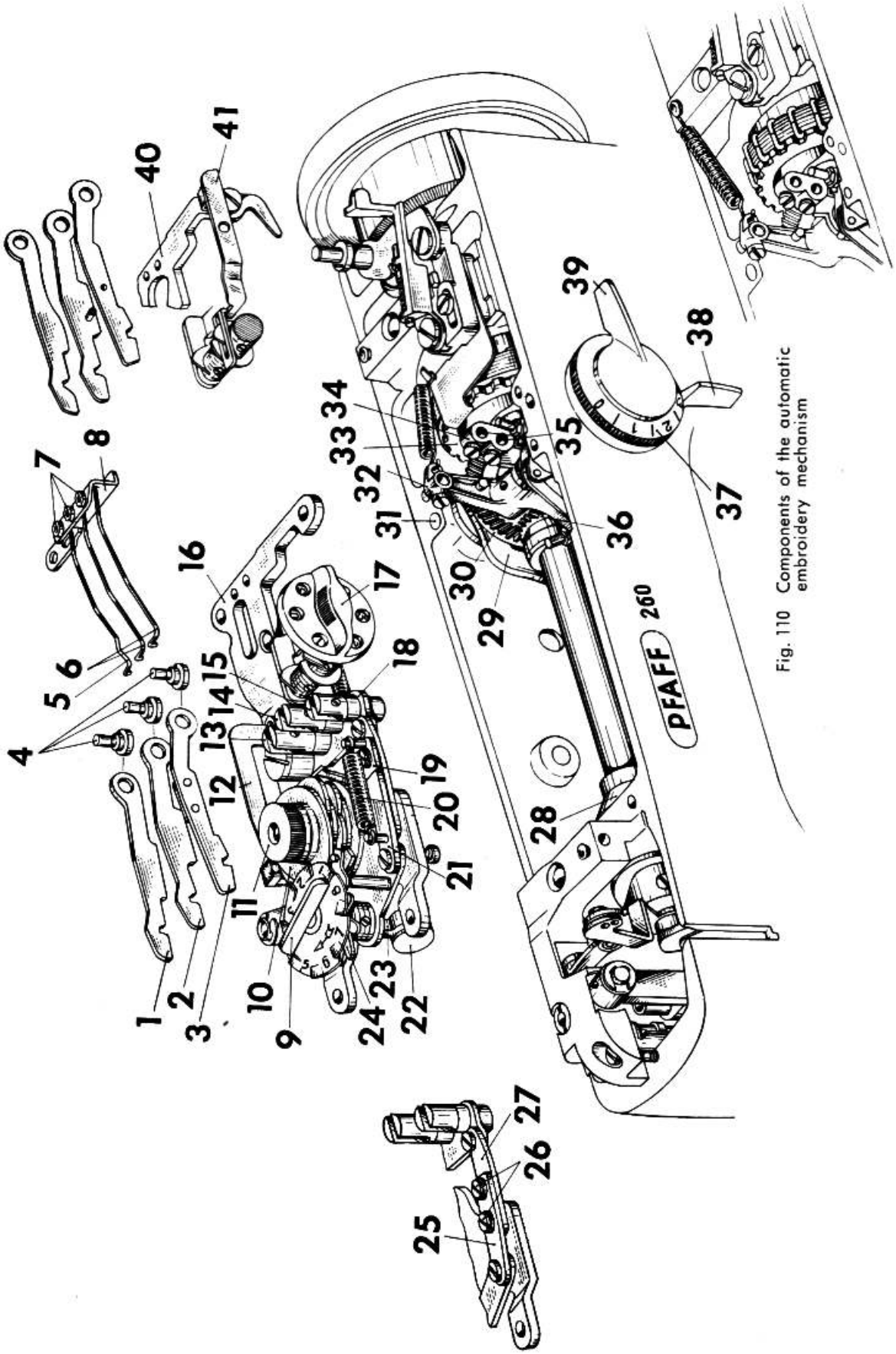

Fig. 110 Components of the automatic embroidery mechanism

Downloaded from www.Manualslib.com manuals search engine

Essential Parts of the Pfaff (-261) Automatic

1 = Needle position engaging lever
2 = Needle vibration engaging lever, full width
3 = Needle vibration engaging lever, half the width
4 = { Eccentric stud, rear / Eccentric stud, center / Eccentric stud, front }
5 = Pressure spring, rear
6 = { Pressure spring, center / Pressure spring, front }
7 = Regulating screw
8 = Pressure spring assembly bracket
9 = Cam selector dial (D)
10 = Cam assembly
11 = Thumb nut
12 = Oil pad holder
13 = Clutch stud, rear
14 = Clutch stud, center
15 = Clutch stud, front
16 = Base (incorporated until Apr. 30, 1960)
17 = Engaging lever dial (C)
18 = Engaging lever driver
19 = Connection, front section (incorporated until Apr. 30, 1960)
20 = Tension spring
21 = Connection, rear section (incorporated until Apr. 30, 1960)
22 = Driving roller
23 = Driving lever
24 = Contact finger assembly
25 = Connection, rear section (incorporated as from May 1, 1960)
26 = Screw
27 = Connection, front section (incorporated as from May 1, 1960)
28 = Driving eccentric for automatic mechanism
29 = Needle bar frame pitman
30 = Needle vibrating eccentric bevel gear
31 = Transverse shaft set screw
32 = Zigzag regulator arm
33 = Driving belt sprocket, upper
34 = Cam finger (upper end)
35 = Eccentric stud boreholes
36 = Arm shaft bevel gear
37 = Stitch width dial (A)
38 = Needle position lever (B)
39 = Zigzag finger-tip control (F)
40 = Base (incorporated as from May 1, 1960)
41 = Disengaging lever

Downloaded from www.Manualslib.com manuals search engine

Having made sure that the position of the driving eccentric on the arm shaft is correct, take the automatic mechanism in your left hand (in the position shown in Fig. 111) and, with the index finger of your left hand, push against the protruding end of the driving lever which carries the driving roller. Push regulating

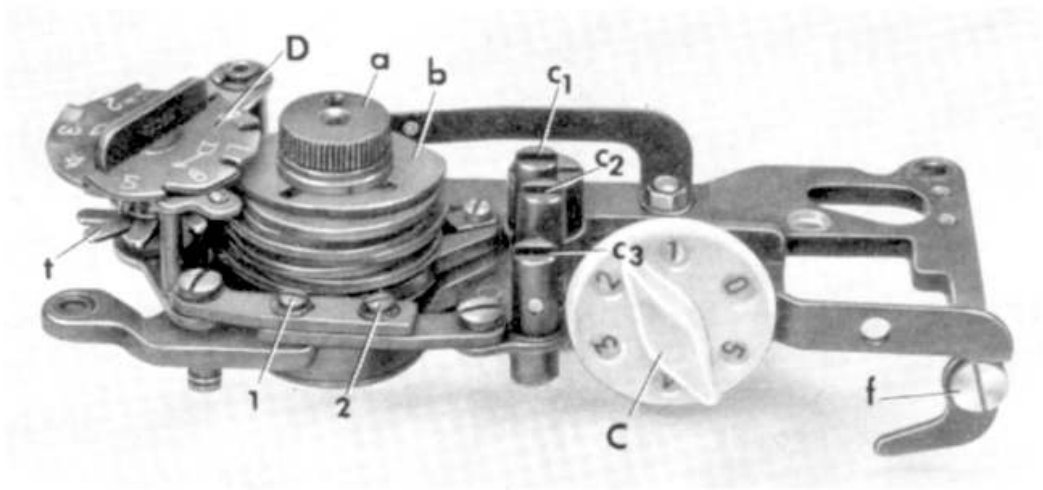

Fig. 111 Automatic embroidery mechanism, ready for installation

slide c (Fig. 109) to the left until nose b of the connecting lever is positioned slightly behind the stop pin on the regulating slide, as shown in Fig. 109. If the regulating slide is pushed too far to the left, it will strike against the needle bar frame pitman.

Thus prepared, the automatic embroidery mechanism can be installed into the machine without any difficulty. It is secured in position by three screws. Make sure that disengaging lever e (Fig. 109) lifts the two forward engaging levers, without binding, when you turn stitch width dial A. Also check

a. whether the top contact finger of contact finger assembly D (Fig. 111) is located below the red mark when dial D is turned so that number 1 is opposite this mark, and

b. whether the two set screws on the back of dial C are arranged in a horizontal line when this dial is set on "0". If adjustment is required, loosen the two set screws and adjust the position of the cam (50506) on the stud. This setting must also be preserved when the dial is replaced by a new one.

Downloaded from www.Manualslib.com manuals search engine

Mounting the Pressure Spring Assembly

To facilitate mounting the pressure springs on the bracket, turn out regulating screws 7 (Fig. 110) two or three turns. Then proceed as follows:

Screw the three springs to the bracket. The spring pressing on the rear engaging lever (50431) has a slight dent and must be mounted above this lever.

Mount the pressure spring assembly bracket on the base of the automatic embroidery mechanism and screw it down.

Turn regulating screws 7 so far in or out that the springs exert just enough pressure to cause the engaging levers to slide down securely over the pins in clutch studs c 1, c 2, and c 3 (Fig. 111).

The improved automatic embroidery mechanism features a disengaging lever (e in Fig. 109) and a cam stud with three cams (located to the rear of engaging lever dial C; Fig. 111). It is so designed that the controls will not jam if they are set in a sequence other than the one given on the design selector wheel. (This advantage is not yet present in earlier models of the Pfaff 260-261).

Adjusting the Engaging Levers

Set cam selector dial D (Fig. 111) on "4" and turn the cam assembly clockwise, seizing it by the thumb screw, until the fourth contact finger (from the bottom) is opposite the recess, or lowest point, on the rim of the cam opposite. This basic setting is the same for adjusting all three engaging levers. If, in rare instances, an engaging lever cannot be brought to fit over the pin in the clutch stud opposite by turning its eccentric stud, loosen screws 1 and 2 (Fig. 111) and lengthen or shorten the two-part connection slightly.

1. **Front engaging lever:** Set stitch width dial A on "0", needle position lever B at its central position, and engaging lever dial C on "4". Check whether the square notch in the engaging lever fits readily over the pin in the clutch stud opposite. If it does not, turn the eccentric stud at its right end to the right or left, as appropriate. Then tighten the set screw on the eccentric stud securely.

2. **Central engaging lever:** Set stitch width dial A on "0", needle position lever B at its right position, and engaging lever dial C on "1". Adjust as instructed in paragraph 1 above.

3. **Rear engaging lever:** Set stitch width dial A on "0", needle position lever B at its left position, and engaging lever dial C on "3". Adjust as instructed in paragraph 1 above.

Downloaded from www.Manualslib.com manuals search engine

Replacing the Top Cover

When converting a Pfaff 260 or 360 into an Automatic, replace the top cover on the machine by the special top cover which is supplied with the automatic embroidery mechanism.

To ensure that the pattern length regulating crank (50561) enters the regulating slide (50368) smoothly, take care that the top cover is replaced perpendicularly from above, and that pattern length lever E (Fig. 113) is set between "5" and "7".

If the position of pattern length lever E needs adjustment, loosen the set screw on the driving crank (50558) and turn the crank on the stud of the pattern length regulating crank (50561), as may be required. This adjustment may also become necessary in order to bring the position of the pattern length lever in line with the numbers on its scale.

Checking the Needle Position in Relation to the Needle Plate Slot

Disengage the automatic embroidery mechanism by setting lever E (Fig. 113) and dial C on "0". Turn stitch width dial A to "0" and put needle position lever B in the central notch. Turn the balance wheel in order to check whether the (No. 90) needle is still correctly centered in the needle plate slot, and whether it will clear either end of the slot when set for its widest bight.

If the needle has to be recentered in the needle plate slot, proceed as instructed on page 69.

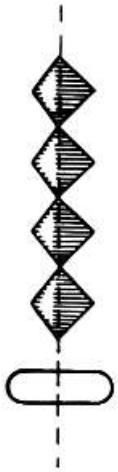

Furthermore, there is a possibility that the spacing between the central and outer positions of the needle in the needle plate slot may have changed so that the embroidery design produced lacks symmetry (Fig. 112).

To remedy this condition, adjust as instructed on page 69.

After all machine settings have been checked and, if necessary, adjusted, squirt oil freely into all oilholes marked red or otherwise.

Fig. 112 Asymmetric embroidery design caused by maladjustment of the automatic embroidery mechanism

Mount oil pad holder 12 (Fig. 110) on the base so that the oil pad which lubricates the pattern cams clears these cams with a springing distance. Soak this pad with oil.

Downloaded from www.Manualslib.com manuals search engine

Testing the Performance of the Automatic Mechanism

Engage the automatic embroidery mechanism, set pattern length lever E on "3" and stitch width dial A on "0", and put needle position lever B in the left notch. To check the operation of the automatic embroidery mechanism, run the machine very slowly, switch cam selector dial D to each of its eight positions in succession, and sew the eight basic embroidery designs that can be produced in this way. The automatic embroidery mechanism works satisfactorily if the machine, while sewing an embroidery design, switches from wide zigzag to straight stitching without any difficulty.

Checking the Operation of the Engaging Levers

Turn engaging lever dial C to the positions given below, and check whether the engaging lever or levers indicated are properly engaged in the respective clutch studs:

1 – central engaging lever

2 – central and rear engaging levers

4 – front engaging lever

5 – front and rear engaging levers

Eliminating Troubles in Automatic Sewing

Type of Trouble

Patterns which, for example, are sewn with D at 7, C at 3, E at 1, and lever B in the left notch lack uniformity.

Cause

1. The pressure springs exert excessive pressure on the engaging levers and thereby retard the return of the controls to their respective starting positions.
2. The zigzag regulator stud or the zigzag regulator arm turns heavily because it does not have sufficient play.
3. The automatic embroidery mechanism lacks oil.

Remedy

1. Adjust the pressure exerted by the springs as instructed in "Mounting the Pressure Spring Assembly" on page 75.
2. Adjust the position of the zigzag regulator stud or the zigzag regulator arm to ensure sufficient play.
3. Oil the automatic mechanism.

Type of Trouble

Patterns which are sewn with C at "4" and lever B in the central notch lack symmetry.

Cause

This condition may be attributed to maladjustment, improper handling or other causes which have disturbed the correct stitch width setting.

Downloaded from www.Manualslib.com manuals search engine

Remedy

Check and adjust the stitch width setting as instructed on pages 67–69.

Type of Trouble

The patterns are incomplete or irregular.

Cause

Presumably the engaging levers have not enough play or the pressure exerted by the springs is insufficient to make them snap into the clutch studs properly.

Remedy

Increase the spring pressure by turning the regulating screws inwardly, as may be required.

Fig. 113 Controls of the Pfaff 260-261 Automatic

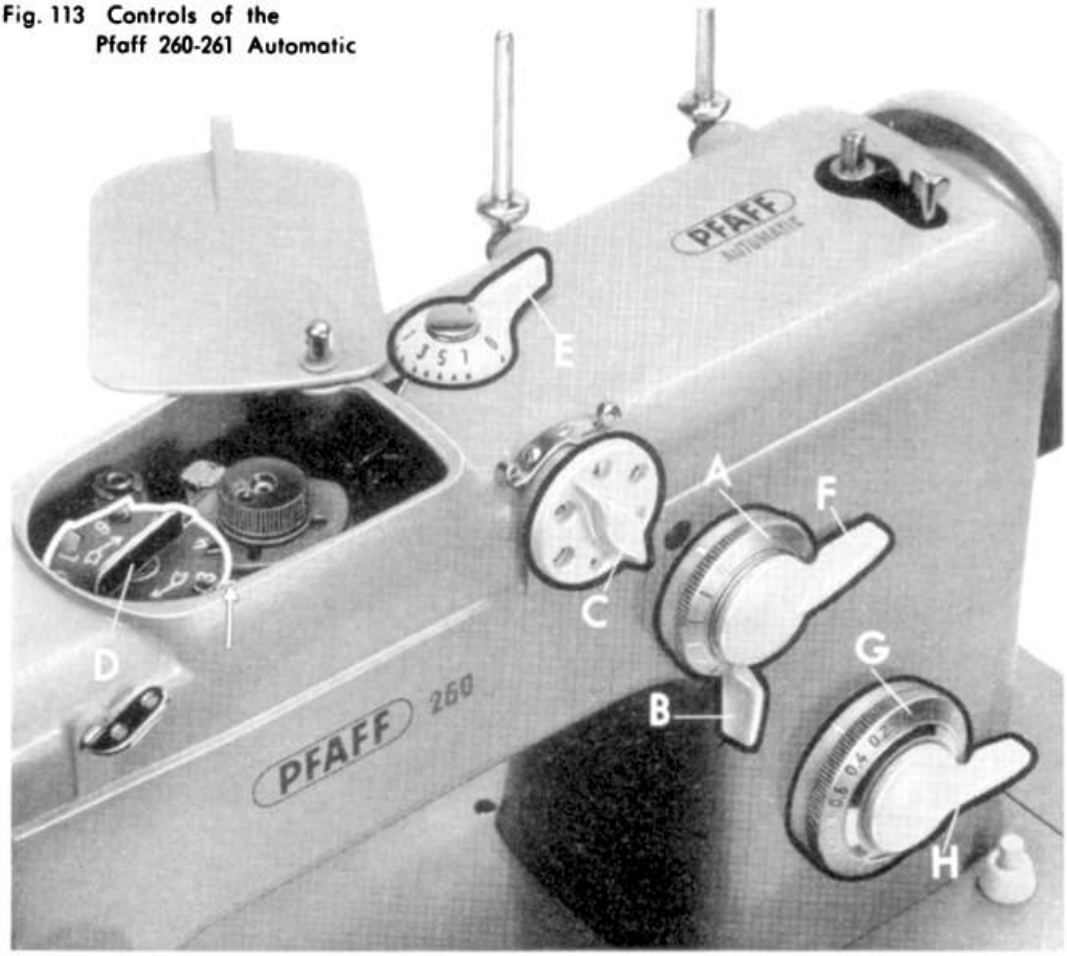

Downloaded from www.Manualslib.com manuals search engine

Installing a PE 260 or 261 Motor into the Pfaff 260 (-261)

The motor is screwed to the underside of the bedplate of the machine. To install the motor in the machine, place the machine in a universally adjustable mounting stand and turn it upside down.

Then proceed as follows:

1. Remove cover 4 of the terminal box located beside the sewing hook (Fig. 114).

2. Turn the motor so that its driving belt sprocket is at the balance-wheel-end of the machine, and place it on the bottom of the bedplate so that both screwholes in the motor bracket line up with the corresponding holes in the bedplate (see arrows in Fig. 115).

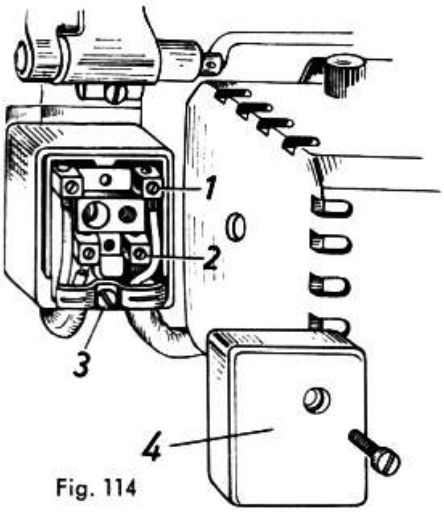

Fig. 114

3. Turn screw A partway in, insert and tighten screw B, then tighten screw A for good (Fig. 115).

4. Connect the short end of the motor cord to terminal 2, the long end to terminal 1, as shown in Fig. 114. Secure the cable sheath in position by the clip held in place by screw 3. Replace and screw down the terminal box cover.

5. Loosen hexagon screw h (Fig. 118) and return the machine to its normal position in the mounting stand.

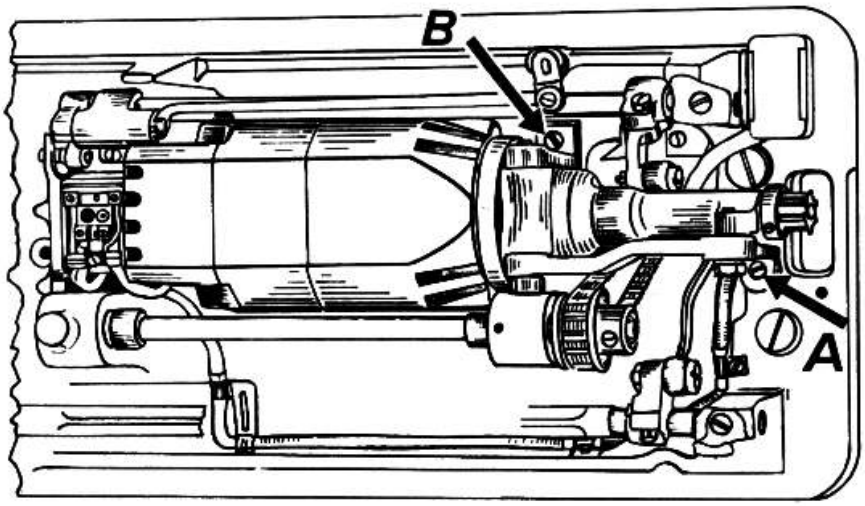

Fig. 115 Installing and adjusting the Pfaff PE 260 (261) motor

Downloaded from www.Manualslib.com manuals search engine

6. To strip the foot-drive balance wheel, take out stop screw a (Fig. 116), unscrew stop motion knob b by turning it counter-clockwise, remove friction washer c, and pull balance wheel d off the arm shaft bushing.

7. Turn motor belt e so that the clip openings face out, push it over the arm shaft bushing and through the aperture into the arm standard (Fig. 117). Push power-drive balance wheel f on the arm shaft bushing, and mount the motor belt on the balance wheel sprocket. Replace parts a–c in reverse order to secure the balance wheel in position.

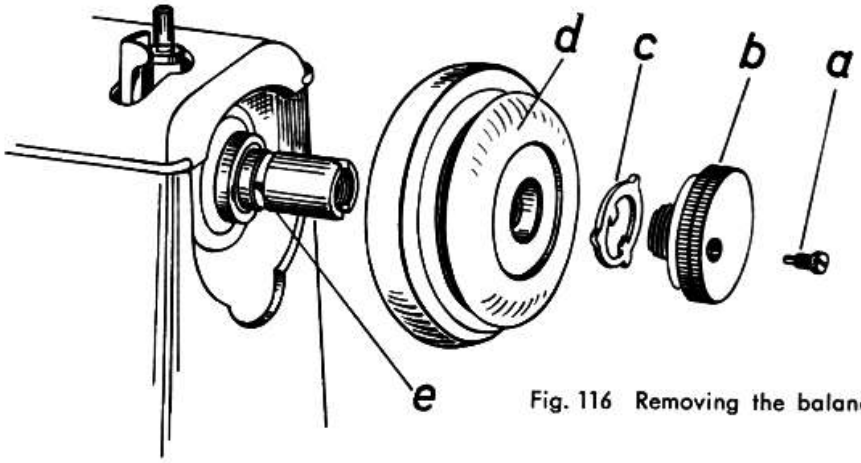

Fig. 116 Removing the balance wheel

8. Since hexagon screw h (Fig. 118) is loose, the motor shaft can be tilted toward the bedplate so that the lower end of the cord belt can be slipped onto sprocket g.
9. Tilt the sprocket-end of the motor shaft away from the bedplate until the cord belt is tensioned slightly. Hold the motor shaft in this position and tighten hexagon screw h. Make sure the cord belt is not tensioned too much as this would cause binding.
10. Turn the balance wheel to see if all parts work properly. If the machine is equipped with a balance wheel with free-wheeling device, which can be used for both foot and power drive, set the balance wheel for foot drive, and check whether the driving belt sprocket remains stationary when you turn the balance wheel. If the free-wheeling device should not have disengaged the motor belt sprocket, hold the cord belt briefly when you start treadling.

Fig. 117

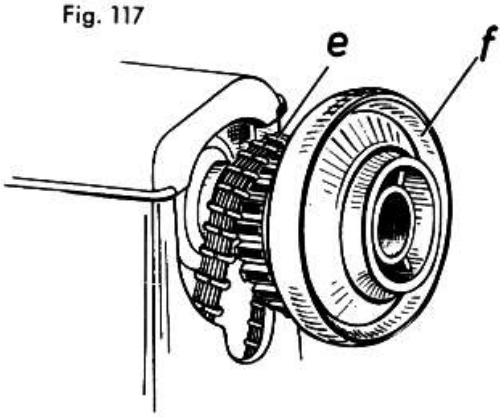

Fig. 118

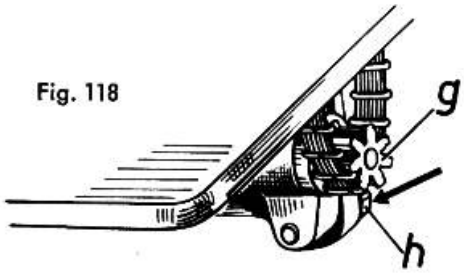

Downloaded from www.Manualslib.com manuals search engine

Changing the Motor Belt

Loosen hexagon screw h on the motor bracket (Fig. 118), tilt the sprocket-end of the motor shaft toward the bedplate, and pull the motor belt off the sprocket. Remove the balance wheel as instructed in paragraph 6 in the preceding chapter, and exchange the old for a new driving belt.

To mount the driving belt, follow the procedure outlined in paragraphs 7 through 9 in the preceding chapter.

Trouble Shooting

1. Machine Skips Stitches

Cause:	Remedy:
Needle incorrectly inserted.	Push needle up as far as it will go and be sure that the long groove faces toward you, and flat side of shank away from you.
Wrong needle.	The correct needle system is 130 R. For two-needle sewing jobs up to 3/32" needle gauge, use System 130 B needles, and for needle gauges exceeding 3/32", System 130 R needles.
Needle bent.	Insert new needle.
Machine threaded improperly.	Check and correct threading as instructed on page 19.
Needle too fine or too thick for the thread.	Select correct needle from Needle and Thread Chart on page 18.

2. Needle Thread Breaks

Cause:	Remedy:
The above mentioned may cause thread breakage.	See remedies listed under 1. above.
Thread tension too tight.	Adjust tensions as instructed on page 15.
Poor or knotty thread used.	Use good-quality threads only.
Hook raceway is jammed with thread or needs oiling.	Clean and oil hook raceway as instructed on page 41 or 84.
Burrs or sharp edges on needle plate slot.	Polish needle plate slot with fine emery twine.

Downloaded from www.Manualslib.com manuals search engine

3. Needle Breaks

Cause:	Remedy:
Bent needle strikes point of sewing hook.	Replace needle at once to prevent further damage.
Needle too thin or thread too heavy.	Note Needle and Thread Chart on page 18.
Fabric pulls needle so it bends and strikes needle plate.	Don't force the feeding motion. Guide the material lightly.
Bobbin case inserted incorrectly.	Push bobbin case until you hear it snap into place.

4. Faulty Stitch Formation

Cause:	Remedy:
Improper tension.	Adjust tension as instructed on page 15.
Thread too heavy, knotty or hard.	Use only first-rate thread – the correct size for the needle and fabric.
Bobbin unevenly wound.	Don't run thread over finger when winding the bobbin, but lead it around thread retainer stud on top cover.
Pieces of thread between tension discs.	Raise presser bar lifter and remove thread.

5. Machine Feeds Improperly

Cause:	Remedy:
Feed dog set too low, does not rise up enough above needle plate level.	Set feed dog higher. When set correctly, the advancing feed dog should show a full tooth above the needle plate.
Accumulations of lint packed between feed teeth.	Take off needle plate and remove lint with a stiff brush.

Downloaded from www.Manualslib.com manuals search engine

6. Machine Works Heavily

Cause:	Remedy:
Motor belt is too loose and slips, or has shrunk and causes excessive pressure on bearings.	Shorten belt or insert a piece of belting to lengthen it (cut ends of belt on the straight and abut. Punch holes into belt from grain side).
Hook raceway lacks oil or is obstructed by pieces of thread.	Clean and oil hook raceway.
Mechanism clogged by inferior oil.	Use only Pfaff sewing machine oil – never salad oil or glycerine. Note illustrations on pages 40 and 41.
Bobbin winder working while sewing (when a bobbin is not being filled).	Stop bobbin winder.

Components of the Pfaff sewing hook

119 120 121 122 123

a = Position slot
b = Bobbin case base
c = Bobbin
d = Bobbin case latch
e = Bobbin case cap
f = Sewing hook
g = Hook point
h = Hook thread guard

Downloaded from www.Manualslib.com manuals search engine

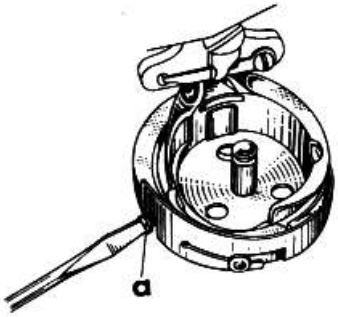

Fig. 125

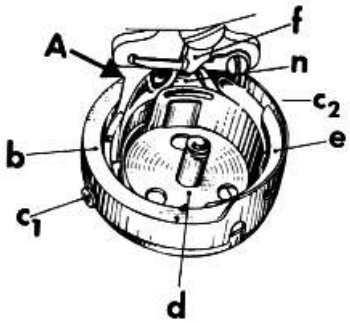

Fig. 126

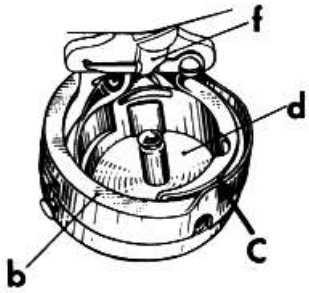

Fig. 127

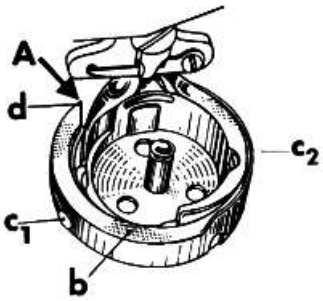

Fig. 128

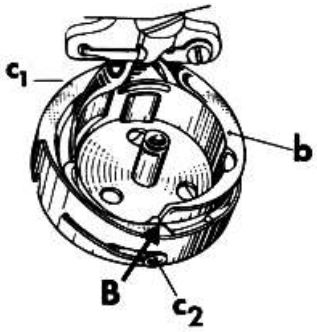

Fig. 129

Dismantling the Pfaff Hook

Fig. 125

1. Remove bobbin case and bobbin.
2. Take out locking screw a.

Fig. 126

3. Hold the balance wheel steady and turn thread guard b on the sewing hook clockwise until it is stopped by guide pins c_1 and c_2.
4. Turn the balance wheel until the point of thread guard b is in the position marked by A in Fig. 126.

Fig. 127

5. Lift thread guard b and take it out, turning it slightly around position finger f.
6. Push your thumb nail under the rim of bobbin case base d at C, lift the bobbin case base and tip it out.

Reassembling the Pfaff Hook

Fig. 128

1. Replace bobbin case base d in the hook in the position shown in Fig. 127.
2. Turn the balance wheel cautiously until the hook point is in the position marked by A in Fig. 127. Hold thread guard b so that its opening faces the position finger and its two slots are opposite guide pins c_1 and c_2. Replace thread guard b on the sewing hook and press it down until its crown at the right lies on bobbin case base d.

Fig. 129

3. Turn the balance wheel cautiously until the hook is in the position marked by B in Fig. 129. In this phase, guide pins c_1 and c_2 will enter the slots in thread guard b. Turn thread guard b clockwise as far as it will go.
4. Replace and tighten locking screw a securely, as shown in Fig. 125.

Downloaded from www.Manualslib.com manuals search engine

Works of the Pfaff 260-261

1 = Pressure regulating screw
2 = Needle bar crank (driving needle bar and take-up mechanisms)
3 = Needle bar connecting link
4 = Needle bar frame
5 = Threader bar
6 = Needle bar
7 = Needle holder
8 = Presser foot
9 = Hook shaft with helical gear
10 = Hook drive shaft helical gear
11 = Hook with bobbin case
12 = Center for shafts 17 and 38
13 = Bobbin case position finger
14 = Feed bar
15 = Feed lifting shaft crank, front
16 = Hook drive shaft
17 = Feed lifting shaft

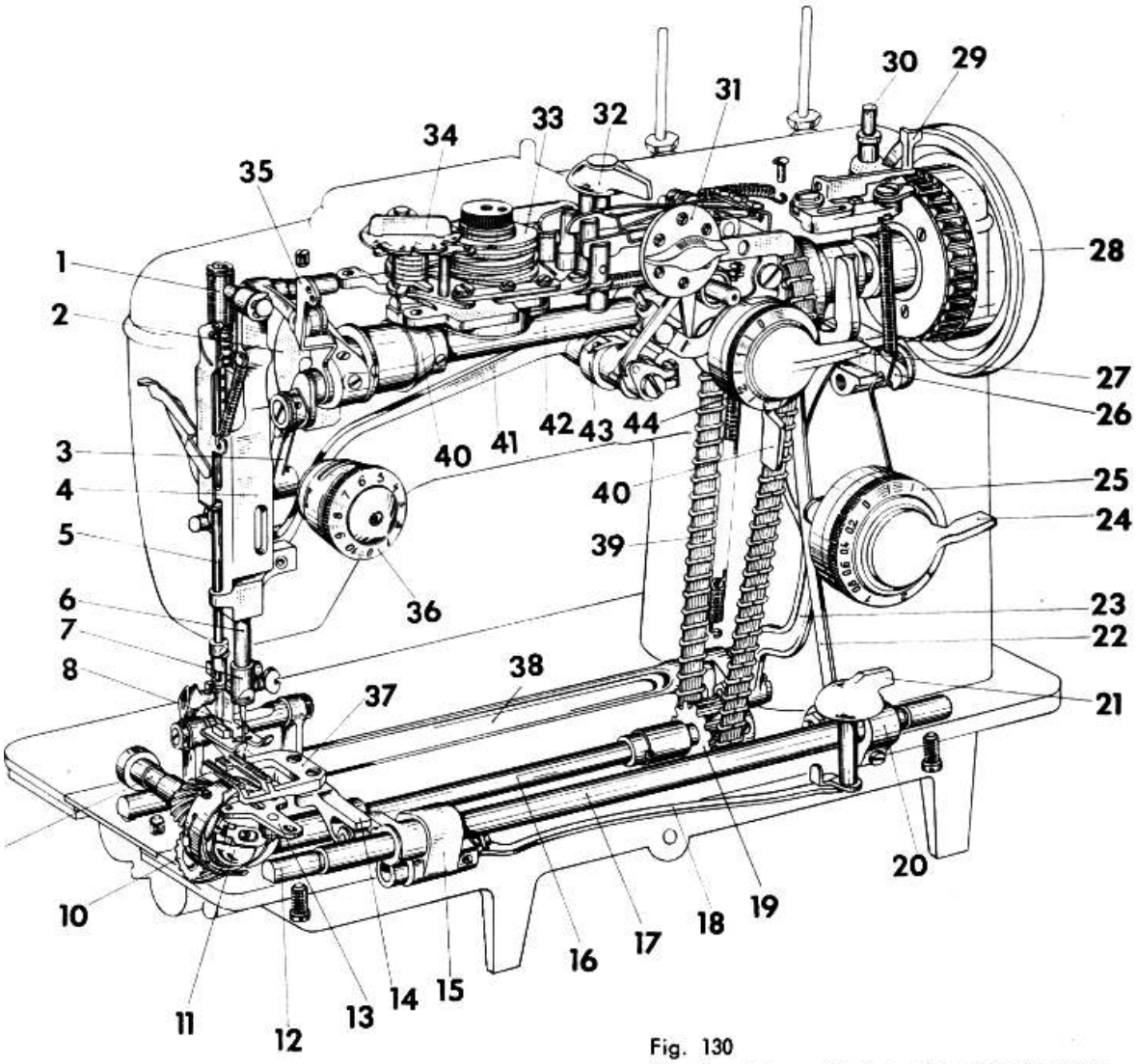

Fig. 130
Needle plate omitted to afford better view

18 = Drop feed connecting rod
19 = Driving belt sprocket, lower
20 = Feed lifting shaft crank, rear
21 = Drop feed knob
22 = Feed lifting connection
23 = Feed forked connection
24 = Reverse feed control H
25 = Stitch length dial G
26 = Feed regulator
27 = Zigzag finger-tip control F
28 = Balance wheel
29 = Bobbin winder thumb lever
30 = Bobbin winder spindle
31 = Engaging lever dial C
32 = Pattern length lever E
33 = Cam assembly
34 = Cam selector dial D
35 = Take-up lever
36 = Tension dial M
37 = Feed dog
38 = Feed rock shaft
39 = Driving belt (cord)
40 = Driving eccentric for automatic embroidery mechanism
41 = Needle bar frame pitman
42 = Arm shaft
43 = Zigzag regulator stud
44 = Stitch width dial A
45 = Needle position lever B

Downloaded from www.Manualslib.com manuals search engine

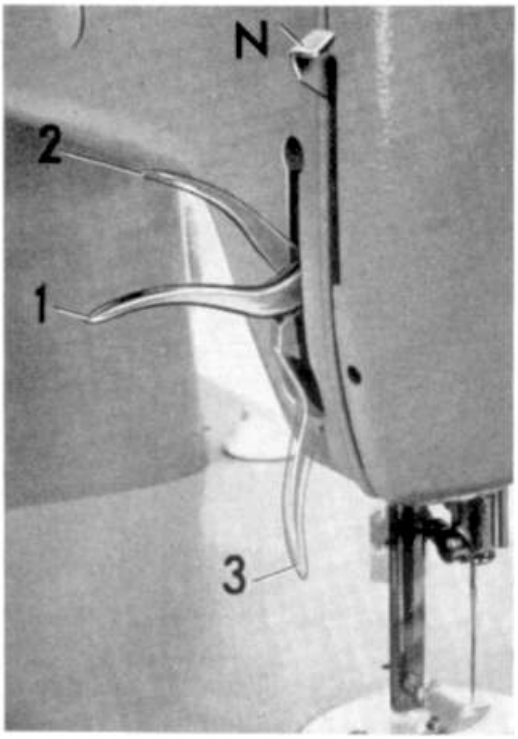

Fig. 131 Two-position presser bar lifter

The Two-Position Presser Bar Lifter

All Pfaff 260 (360) sewing machines with and without automatic embroidery mechanism are now equipped with a presser bar lifter which can be flicked to two raised positions.

When the presser bar lifter is flicked to position I (Fig. 131), the presser bar is raised, but the needle thread tension is not released. This position is ideal for embroidering and darning (with or without foot) and obviates the use of a darning hook.

When the presser bar lifter is set at position II, it disengages the needle thread tension, thus facilitating the removal of the work from the machine.

The Pfaff Tool Kit

Pfaff has brought out a tool kit containing a complete set of the tools required for the performance of repairs away from the repair shop at the customer's home. A second tool kit with a larger set of tools is available for the repair of industrial sewing machines. If you are interested in obtaining one of these kits, please request our quotation.

Tool Set in Tool Kit No. 1

1 Cowhide leather bag with compartments
1 Water pump pliers No. 2565 M, make "Belzer"
1 Open-end wrench No. 1336, 15/14 mm ($^{19}/_{32}$" x $^{9}/_{16}$")
1 Open-end wrench No. 1336, 13/12 mm ($^{1}/_{2}$" x $^{15}/_{32}$")
1 Open-end wrench No. 1336, 11/10 mm ($^{7}/_{16}$" x $^{25}/_{64}$")
1 Open-end wrench No. 1336, 9/8 mm ($^{23}/_{64}$" x $^{5}/_{16}$")
1 Open-end wrench No. 1336, 7/6 mm ($^{9}/_{32}$" x $^{15}/_{64}$")
1 Box wrench No. 4020, make "Belzer", $^{3}/_{8}$" or 9.52 mm
1 Midget slip-joint pliers No. 2565 L, make "Belzer"
1 Cable sheath splitting knife No. 2048, w/ scraper
1 Combination pliers No. 1571, $6^{5}/_{16}$", or 160 mm, long
1 Belt punch, for round belts, $^{3}/_{16}$" – $^{9}/_{32}$", (5–7 mm) dia.
1 Hammer No. 1122, 7 oz. (200 grams), w / handle
1 Quick-grip file handle, make "Pferd"
1 Midget chisel set No. 3639, make "Belzer"
1 Vise, 2", or 50 mm, jaw length; $1^{1}/_{4}$", or 32 mm, jaw opening
1 Screwdriver No. 9705, make "Belzer", w/ $2^{3}/_{8}$" x $^{3}/_{16}$", or 60 x 5 mm, blade
1 Screwdriver No. 9720, make "Belzer", w/ $1^{9}/_{16}$" x $^{11}/_{64}$", or 40 x 4.5 mm, blade
1 Screwdriver, for Cl. 138 sewing hook

Downloaded from www.Manualslib.com manuals search engine

1 Flat brush, 1"
1 Oilstone, medium fine grit, $3^{15}/_{16}$", or 100 mm, long
1 Oilstone, fine grit, $3^{15}/_{16}$", or 100 mm, long
1 Gimlet No. 3137, $^{5}/_{32}$", or 4 mm, dia.
1 Side cutting pliers, $4^{15}/_{16}$", or 125 mm, long
1 Round-nose pliers, $5^{1}/_{2}$", or 140 mm, long
1 Flat-nose pliers No. 1550, $4^{3}/_{4}$", or 120 mm, long
1 Precision screwdriver set
1 Needle rise gauge, w/ clamp, for a needle rise of .063", .071", .079" and .087" (1.6; 1.8; 2.0 and 2.2 mm)
1 Needle rise gauge, for a needle rise of .094", or 2.4 mm
1 Oiler No. 4360, make "Belzer"
1 Oiler No. 2706, brass w/ reversible spout
1 Oil can, plastic, small
2 Metal boxes for spare parts
1 Screwdriver No. 1424, w/ $5^{1}/_{2}$" x $^{3}/_{16}$", or 140 x 5 mm, blade
1 Screwdriver No. 1424, w/ $5^{7}/_{8}$" x $^{5}/_{16}$", or 150 x 8 mm, blade
1 Precision half-round file, cut 5, $3^{15}/_{16}$", or 100 mm, long
1 Precision needle file, $2^{15}/_{16}$" x $^{5}/_{64}$", or 75 x 1.8 mm
1 Square file, cut 3, $4^{5}/_{16}$ x $^{1}/_{8}$", or 110 x 3 mm
1 Triangular scraper, $4^{15}/_{16}$" x $^{1}/_{4}$", or 125 x 6 mm
1 Round file, cut 3, $4^{5}/_{16}$" x $^{1}/_{8}$", or 110 x 3 mm
1 Flat file $4^{1}/_{2}$ S, $4^{15}/_{16}$", or 125 mm
1 Round file $4^{1}/_{2}$ S, $4^{15}/_{16}$", or 125 mm
1 Scriber, $7^{1}/_{8}$", or 180 mm, long
1 Sheet emery cloth No. 2471 b/K 150
1 Sheet finishing cloth No. 2471 b/4/C
28 yds emery twine No. 30/12
2 Cleaning rags
1 Drift punch, w/ brass end, $10^{5}/_{8}$" x $^{5}/_{16}$", or 270 mm x 8 mm
1 Gauge, for automatic embroidery mechanism
1 Circlip pliers
1 Needle threader gauge

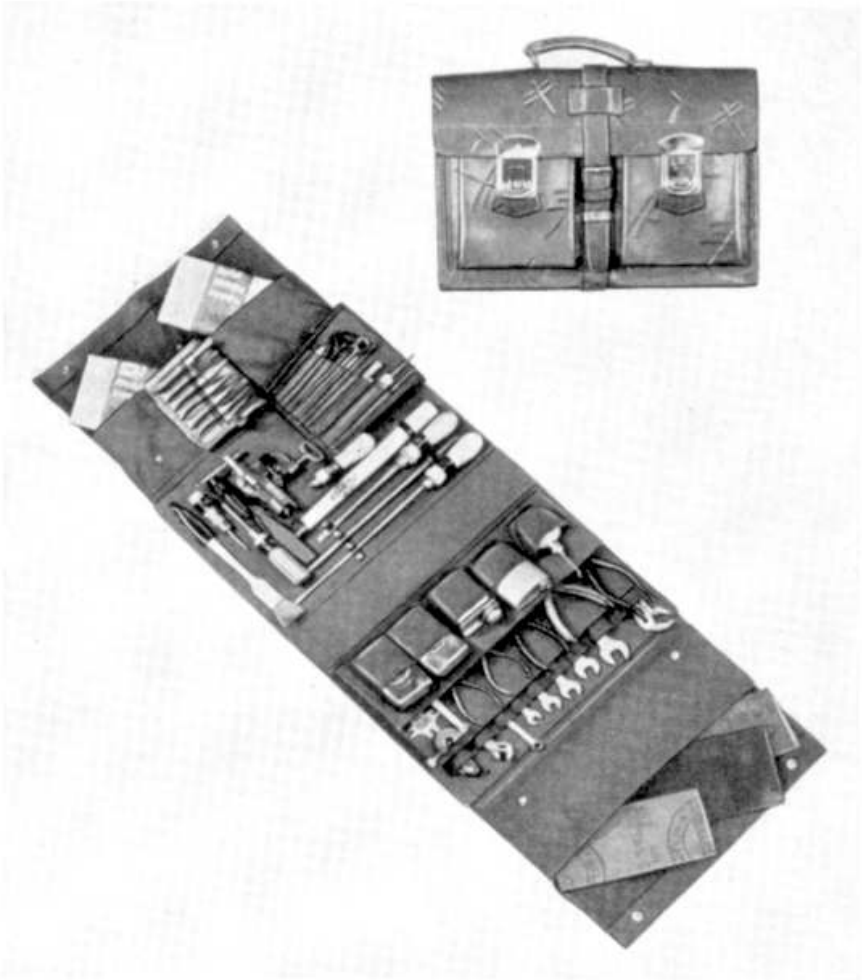

Fig. 132 Pfaff tool kit

Abridged Adjustment Procedure for the Zigzag Regulator Mechanism of Pfaff 260 (360) Machines

1. Insert the zigzag regulator barrel in the machine arm so that needle position lever B points downward when set at its central position.

Downloaded from www.Manualslib.com manuals search engine

2. Turn stitch width dial A to "4".
3. Turn eccentric stud A in the needle bar frame pitman (Fig. 107) so that its lobe is at the top.
4. Turn eccentric stud B (Fig. 106) to set the needle bar as far to the right (toward the balance wheel) as possible.
5. Loosen zigzag regulator crank on zigzag regulator stud b (Fig. 104) just sufficiently to permit the latter to be adjusted from above with the aid of a slender screwdriver.
6. Push zigzag finger-tip control F up as far as it will go and,
7. while the machine is running, adjust zigzag regulator stud b so that the needle bar makes no vibrating motion.
8. Release zigzag finger-tip control F and tighten the set screw on the zigzag regulator crank. Again push up zigzag finger-tip control F and check to see that the needle bar does not swing sideways.
9. Set stitch width dial A on "0", run the machine and turn regulating screw e (Fig. 104) to the right or left, as appropriate, until the needle bar ceases to swing sideways.
10. Turn stitch width dial A to "4" and set needle position lever B at its central position. Turn eccentric stud A (Fig. 107) to center the needle in the needle plate slot.
11. Rotate the bevel gear on the arm shaft until the needle, as it descends on the right and left of its throw, ceases vibrating when its point has reached a position about 5/32" to 1/4", or 4 to 6 mm, above the needle plate. (See also the second paragraph on page 48).
12. Turn stitch width dial A to "0", and set needle position lever B at its left position.
13. Depress zigzag finger-tip control F repeatedly to check whether the needle does not vibrate. If adjustment is required, loosen hexagon screw c on the needle position cam finger (Fig. 104) and the lock nut on regulating screw d, and turn this screw in or out while operating zigzag finger-tip control F, until any needle vibration has been eliminated. This will normally be the case when the clearance at f (Fig. 104) is 5/32", or 4 mm.
14. Put needle position lever B in the central notch.
15. Adjust the needle throw in relation to the center line in the needle plate slot by means of eccentric stud B (Fig. 106). To make this adjustment, turn stitch width dial A to "4", then to "0".
16. Set stitch width dial A on "0" and put needle position lever B in the central notch. Turn eccentric stud A (Fig. 107), as may be appropriate to center the needle in the needle plate slot.
17. Double-check the position of the needle and of the needle throw in relation to the needle plate slot and, if necessary, repeat the adjustments discussed in paragraphs 15 and 16 above. To check the correct setting, place a piece of cardboard under the needle.

Important

Having made this adjustment conscientiously, tighten all set screws securely.

Downloaded from www.Manualslib.com manuals search engine

Downloaded from www.Manualslib.com manuals search engine