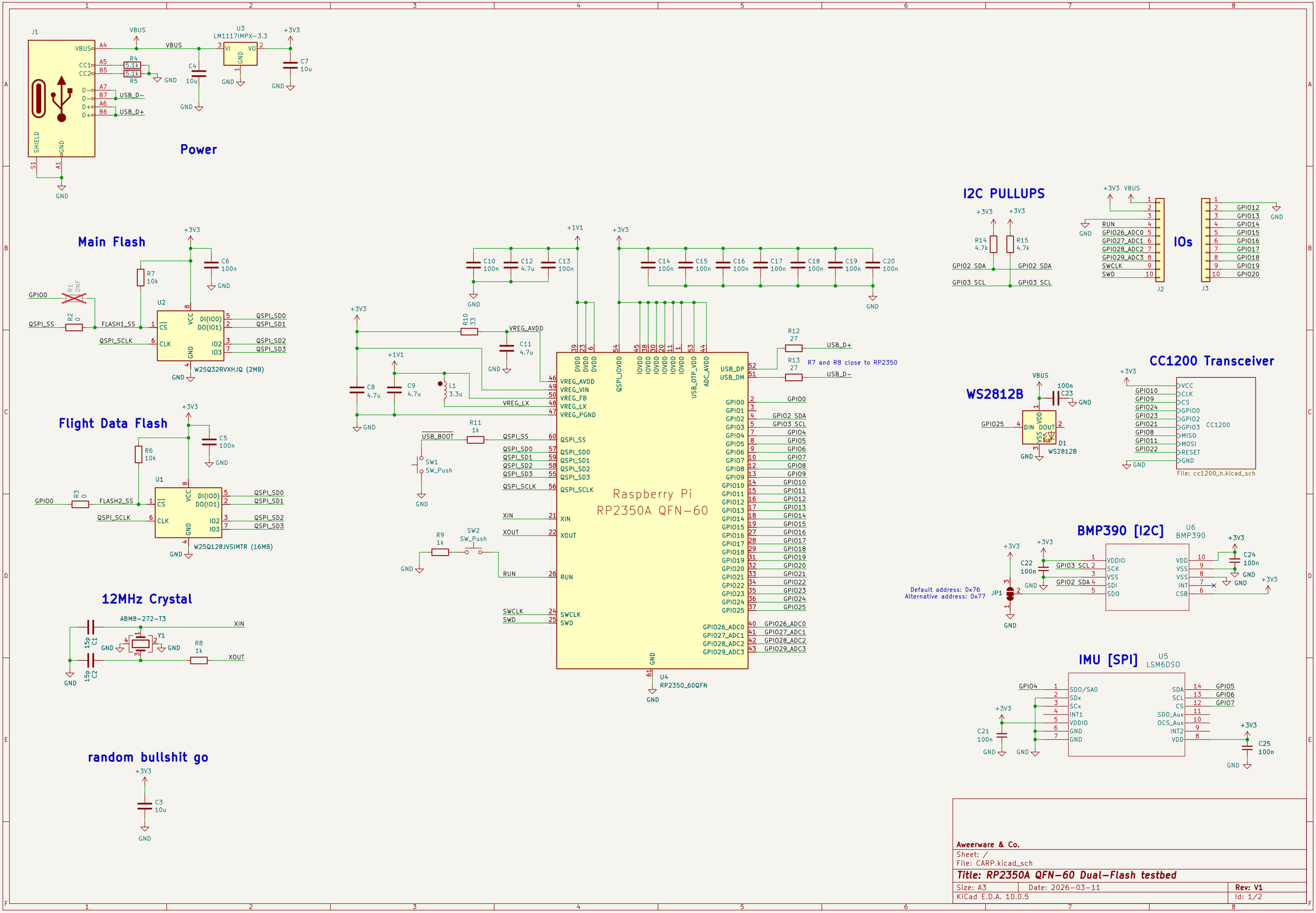

Aweerware & Co.

Sheet: /

File: CARP.kicad_sch

Title: RP2350A QFN−60 Dual−Flash testbed

Size: A3	Date: 2026−03−11	Rev: V1
KiCad E.D.A. 10.0.5		Id: 1/2

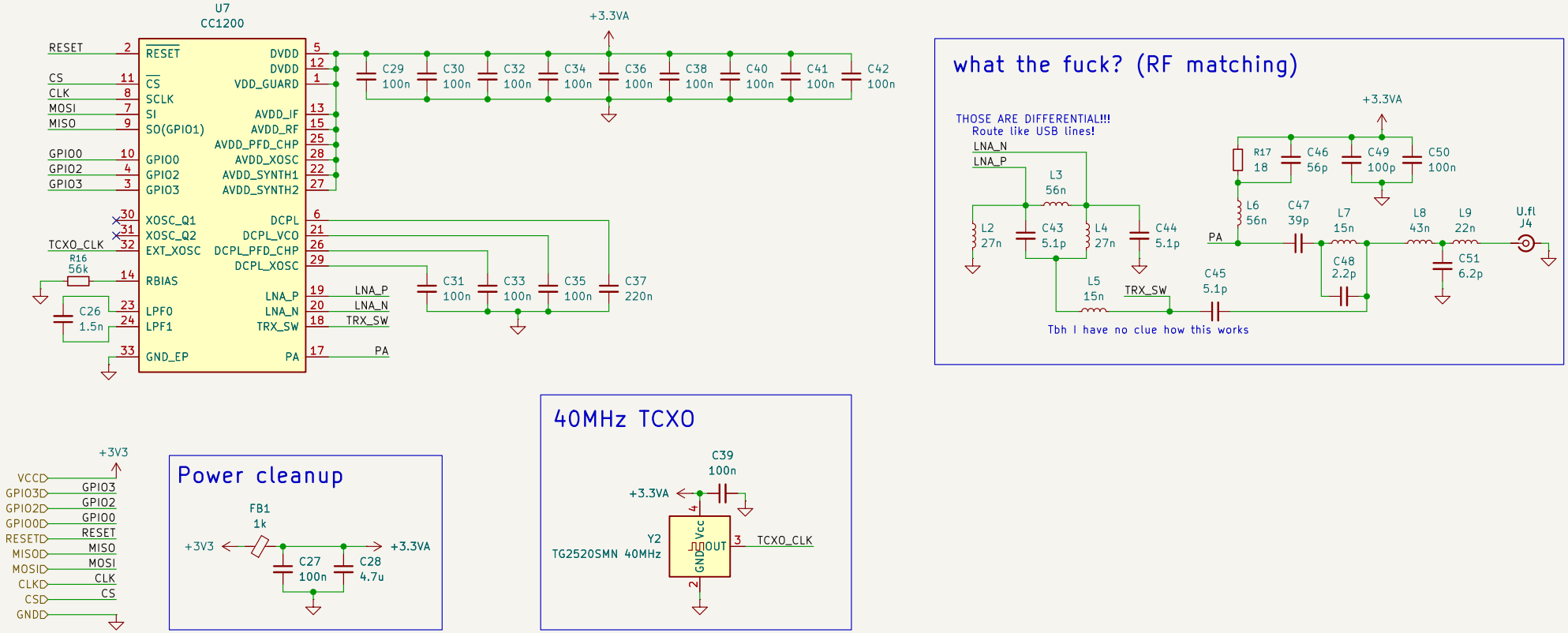

Sheet: /CC1200/
File: cc1200_h.kicad_sch

Title:

Size: A4	Date:	Rev:
KiCad E.D.A. 10.0.5		Id: 2/2