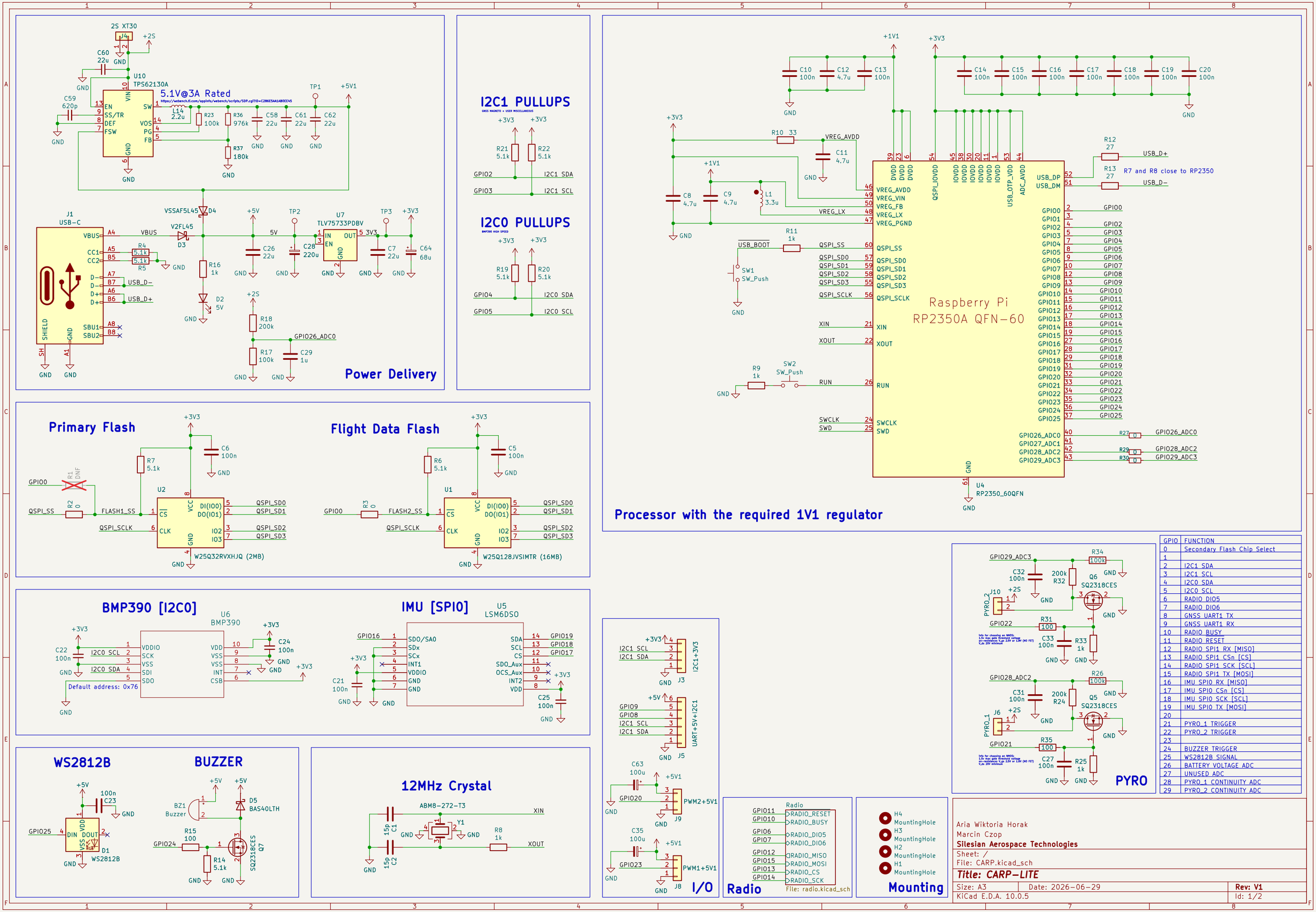

GPIO	FUNCTION
0	Secondary Flash Chip Select
1	
2	I2C1 SDA
3	I2C1 SCL
4	I2C0 SDA
5	I2C0 SCL
6	RADIO DIO5
7	RADIO DIO6
8	GNSS UART1 TX
9	GNSS UART1 RX
10	RADIO BUSY
11	RADIO RESET
12	RADIO SPI1 RX [MISO]
13	RADIO SPI1 CSn [CS]
14	RADIO SPI1 SCK [SCL]
15	RADIO SPI1 TX [MOSI]
16	IMU SPI0 RX [MISO]
17	IMU SPI0 CSn [CS]
18	IMU SPI0 SCK [SCL]
19	IMU SPI0 TX [MOSI]
20	
21	PYRO_1 TRIGGER
22	PYRO_2 TRIGGER
23	
24	BUZZER TRIGGER
25	WS2812B SIGNAL
26	BATTERY VOLTAGE ADC
27	UNUSED ADC
28	PYRO_1 CONTINUITY ADC
29	PYRO_2 CONTINUITY ADC

Aria Wiktoria Horak
Marcin Czop
Silesian Aerospace Technologies

Sheet: /
File: CARP.kicad_sch

Title: CARP-LITE

Size: A3	Date: 2026-06-29	Rev: V1
KiCad E.D.A. 10.0.5		Id: 1/2

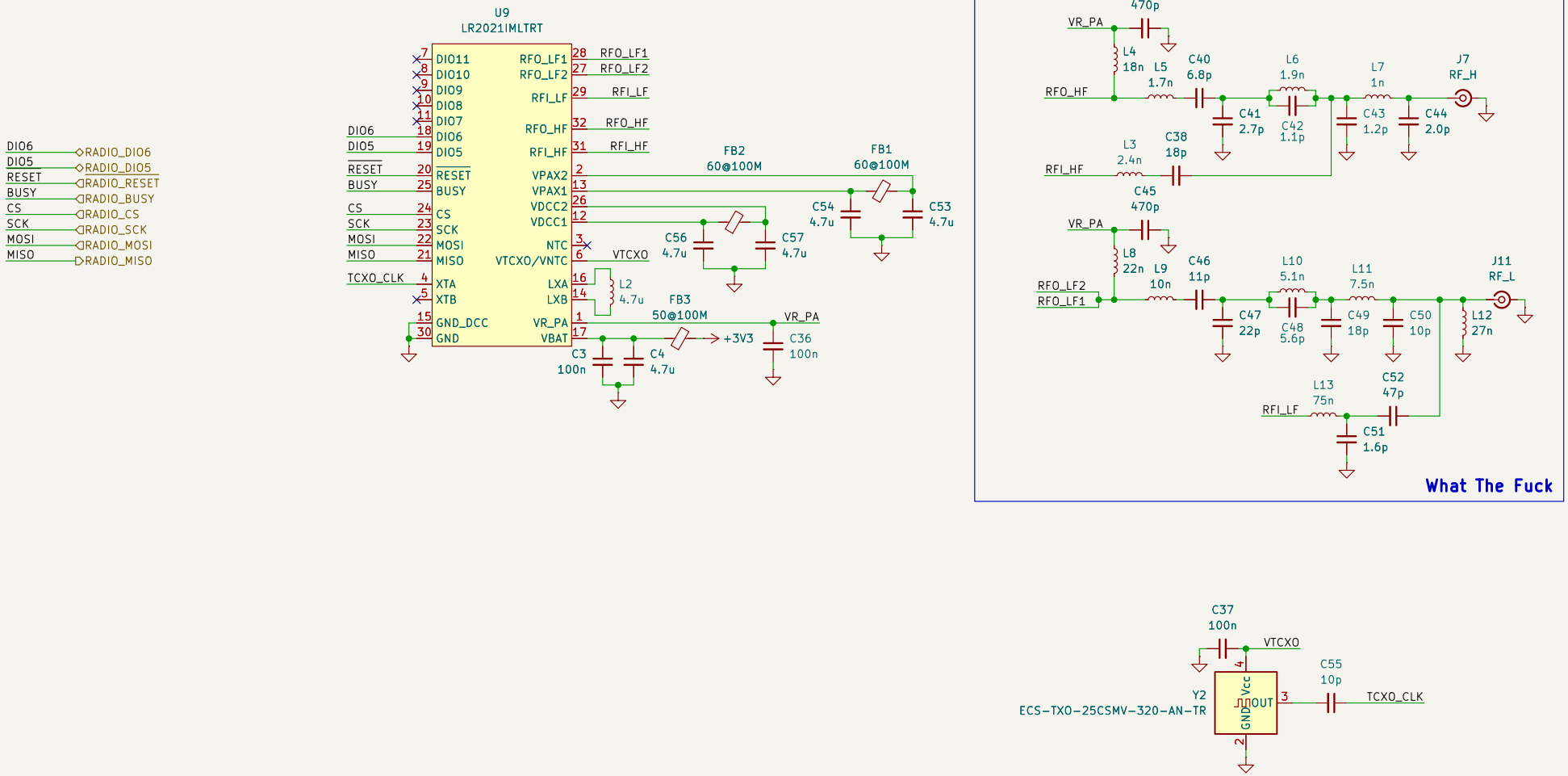

Aria Wiktoria Horak
Marcin Czop
Silesian Aerospace Technologies

Sheet: /Radio/
File: radio.kicad_sch

Title: CARP-LITE

Size: A4	Date: 2026-06-29	**Rev: V1**
KiCad E.D.A. 10.0.5		Id: 2/2