AS3 lug sill - left inside				
Key	Qty.	Dim A	CF/EA	Wdw/door/louver mark
AK	1	54"	1.659	AS3

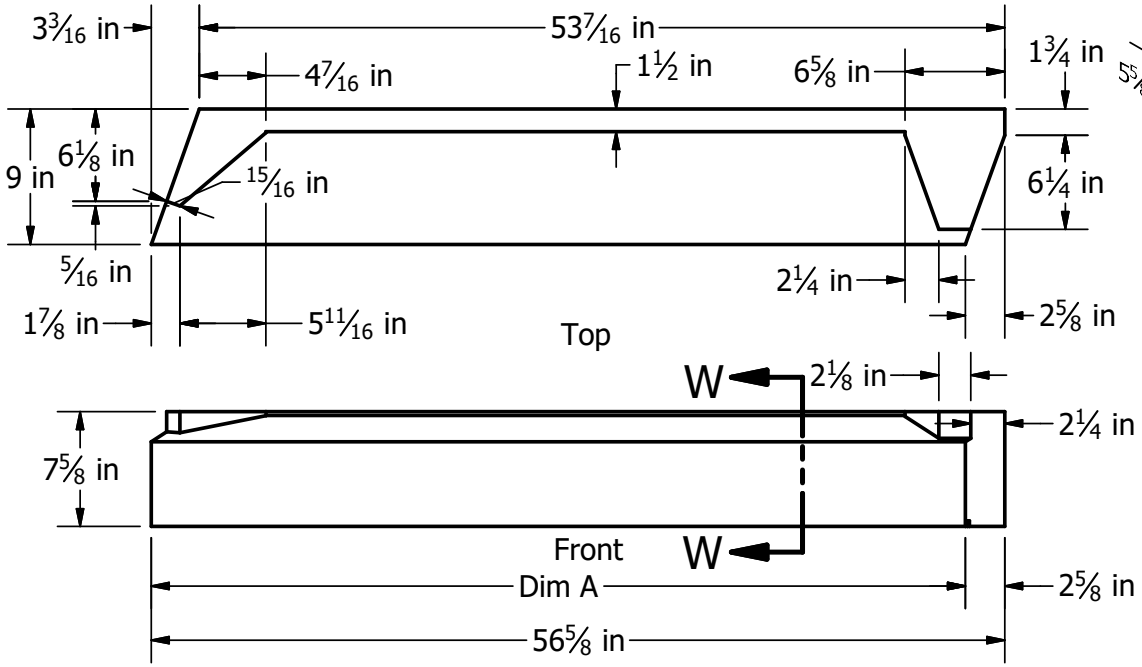

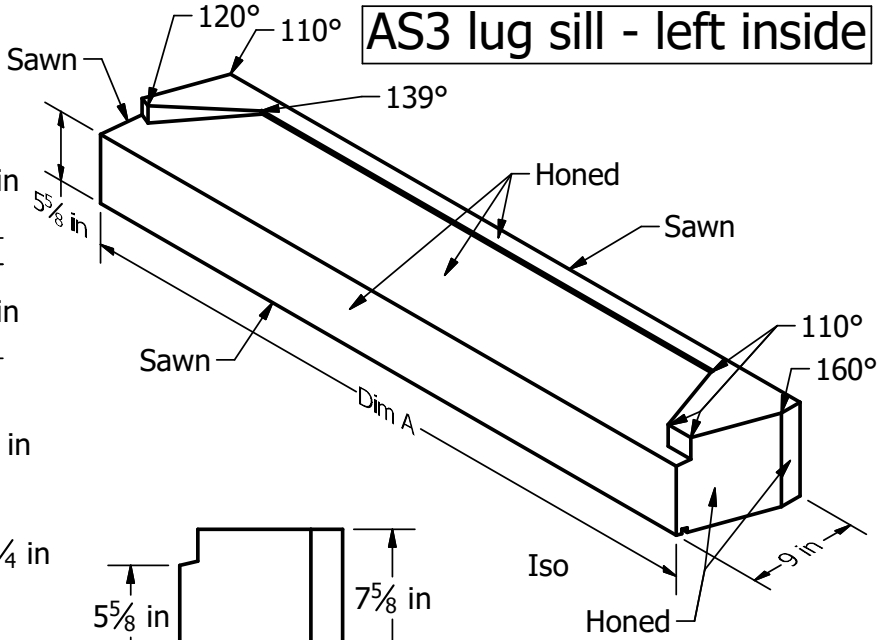

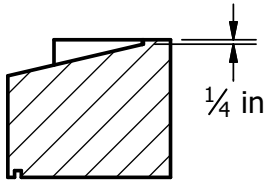

SECTION W-W
SCALE 1 / 10

Side 1/10

X 100	X 10	X 1

DRAWN awelt	10/5/2022
CUBES	
FINISH	Honed
CUT	Fleuri Top
STONE	Amber select
KEY	
QTY	
TOLERANCE	±1/16"

KASOTA STONE
820 WILLOW STREET
MANKATO, MN 56001
507-508-0684

APPROVAL
NAME:
DATE:
PACKAGING NOTES:

JOB NAME
Kenyon College Bldg AE

SIZE	DWG NO	REV
A4	Kenyon_AE	1

SCALE 1 / 12

SHEET 27 OF 31