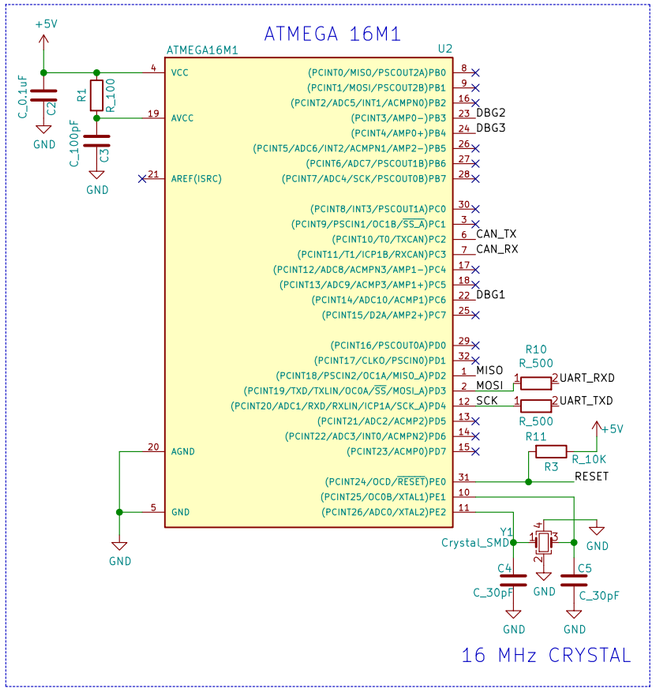

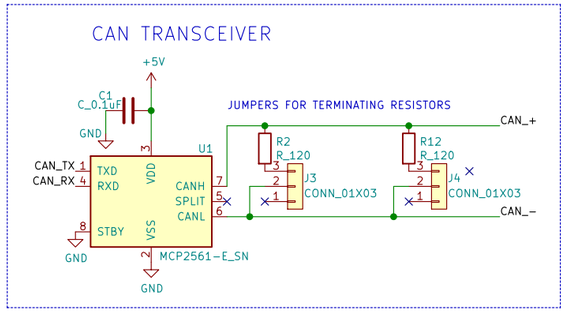

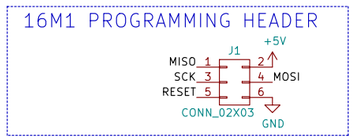

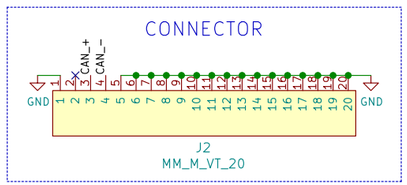

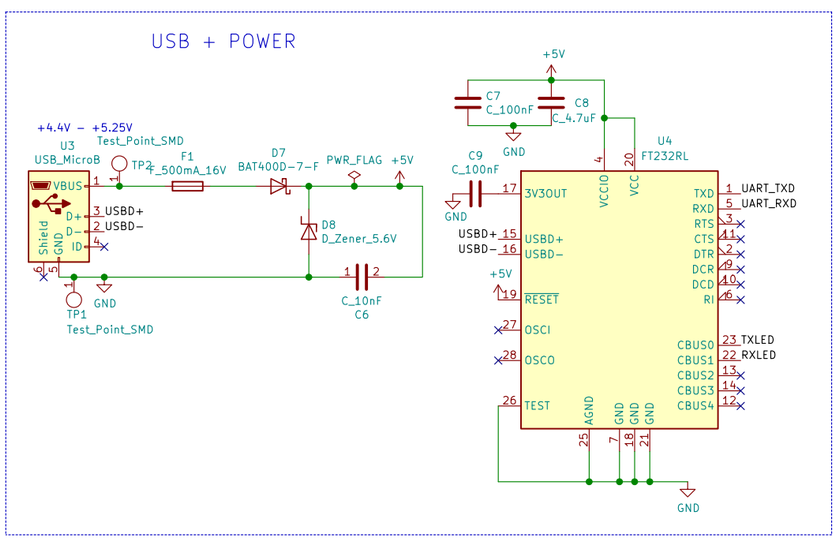

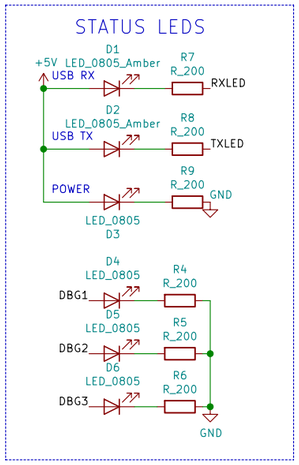

Elvis Wolcott
Olin Electric Motorsports

Sheet: /
File: can_replicator.sch

Title: CAN Replicator

Size: B	Date: 2020-11-09	**Rev: 1**
KiCad E.D.A. kicad (5.1.7)-1		Id: 1/1