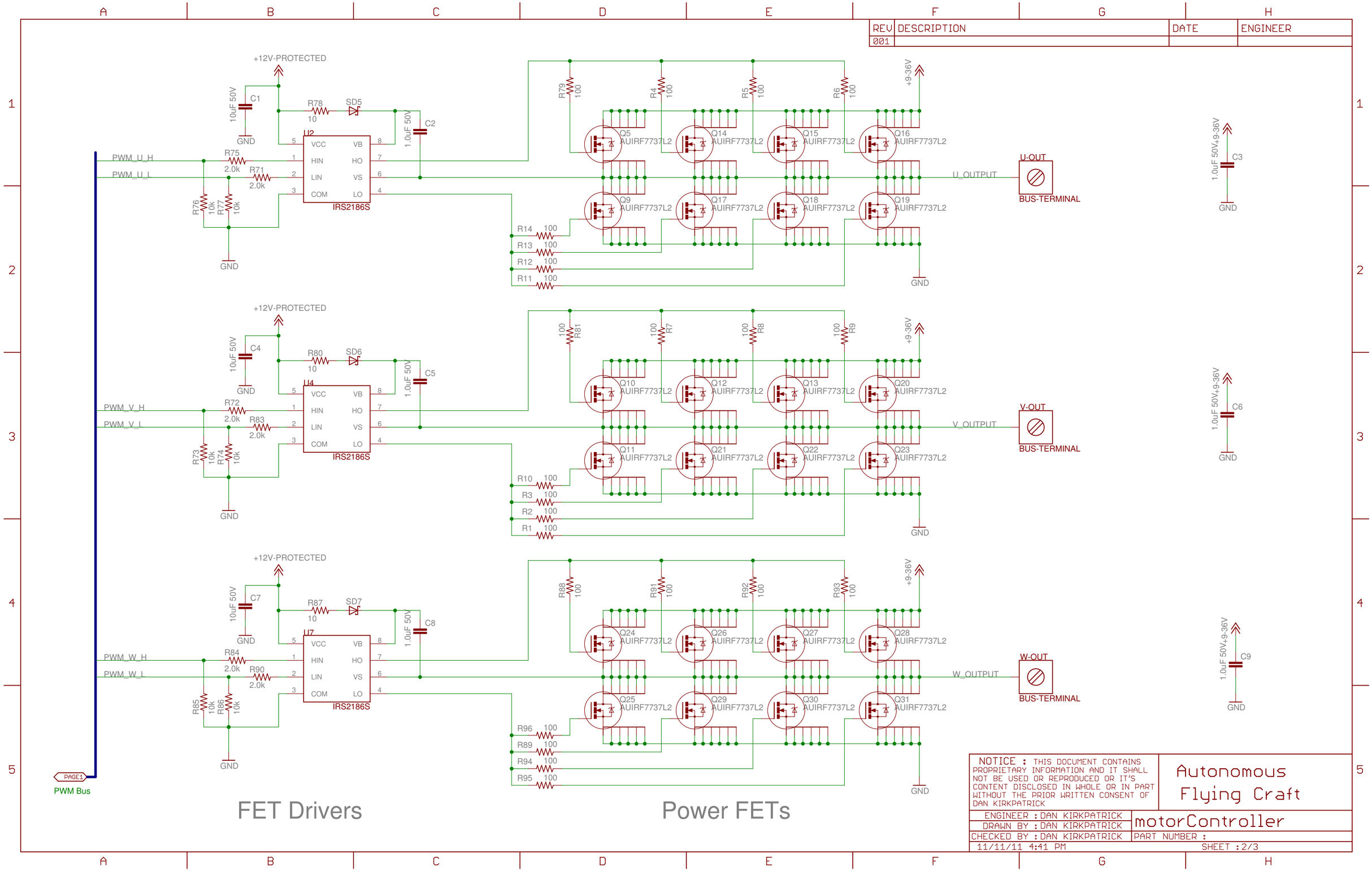
REV DESCRIPTION DATE ENGINEER
001
+12V-PROTECTED
PWM_U_H
PWM_U_L
PWM_V_H
PWM_V_L
PWM_W_H
PWM_W_L
IRS2186S
U2
U4
U7
VCC VB HIN HO LIN VS COM LO
C1 10uF 50V
C2 1.0uF 50V
C4 10uF 50V
C5 1.0uF 50V
C7 10uF 50V
C8 1.0uF 50V
R78 10
R80 10
R87 10
SD5
SD6
SD7
R75 2.0k
R71 2.0k
R72 2.0k
R83 2.0k
R84 2.0k
R90 2.0k
R76 10k
R77 10k
R73 10k
R74 10k
R85 10k
R86 10k
GND
PAGE1
PWM Bus
R79 100
R4 100
R5 100
R6 100
R81 100
R7 100
R8 100
R9 100
R88 100
R91 100
R92 100
R93 100
+9-36V
Q5 AUIRF7737L2
Q14 AUIRF7737L2
Q15 AUIRF7737L2
Q16 AUIRF7737L2
Q9 AUIRF7737L2
Q17 AUIRF7737L2
Q18 AUIRF7737L2
Q19 AUIRF7737L2
Q10 AUIRF7737L2
Q12 AUIRF7737L2
Q13 AUIRF7737L2
Q20 AUIRF7737L2
Q11 AUIRF7737L2
Q21 AUIRF7737L2
Q22 AUIRF7737L2
Q23 AUIRF7737L2
Q24 AUIRF7737L2
Q26 AUIRF7737L2
Q27 AUIRF7737L2
Q28 AUIRF7737L2
Q25 AUIRF7737L2
Q29 AUIRF7737L2
Q30 AUIRF7737L2
Q31 AUIRF7737L2
R14 100
R13 100
R12 100
R11 100
R10 100
R3 100
R2 100
R1 100
R96 100
R89 100
R94 100
R95 100
U_OUTPUT
V_OUTPUT
W_OUTPUT
U-OUT
V-OUT
W-OUT
BUS-TERMINAL
C3 1.0uF 50V
C6 1.0uF 50V
C9 1.0uF 50V
FET Drivers
Power FETs
NOTICE : THIS DOCUMENT CONTAINS PROPRIETARY INFORMATION AND IT SHALL NOT BE USED OR REPRODUCED OR IT'S CONTENT DISCLOSED IN WHOLE OR IN PART WITHOUT THE PRIOR WRITTEN CONSENT OF DAN KIRKPATRICK
Autonomous Flying Craft
ENGINEER : DAN KIRKPATRICK
DRAWN BY : DAN KIRKPATRICK
CHECKED BY : DAN KIRKPATRICK
motorController
PART NUMBER :
11/11/11 4:41 PM
SHEET : 2/3