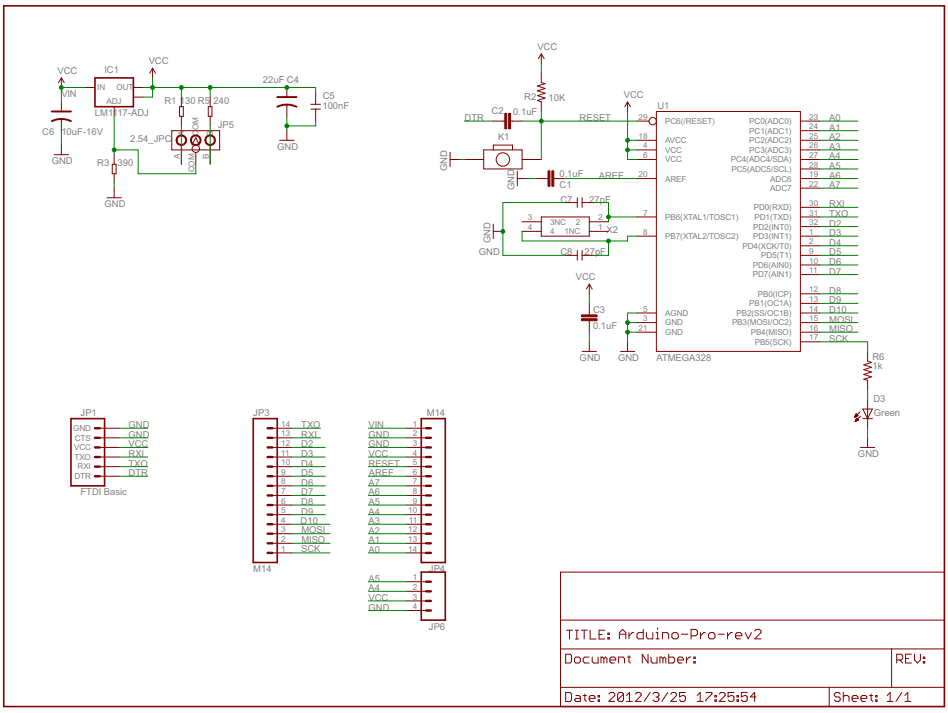

TITLE: Arduino-Pro-rev2

Document Number: REV:

Date: 2012/3/25 17:25:54 Sheet: 1/1