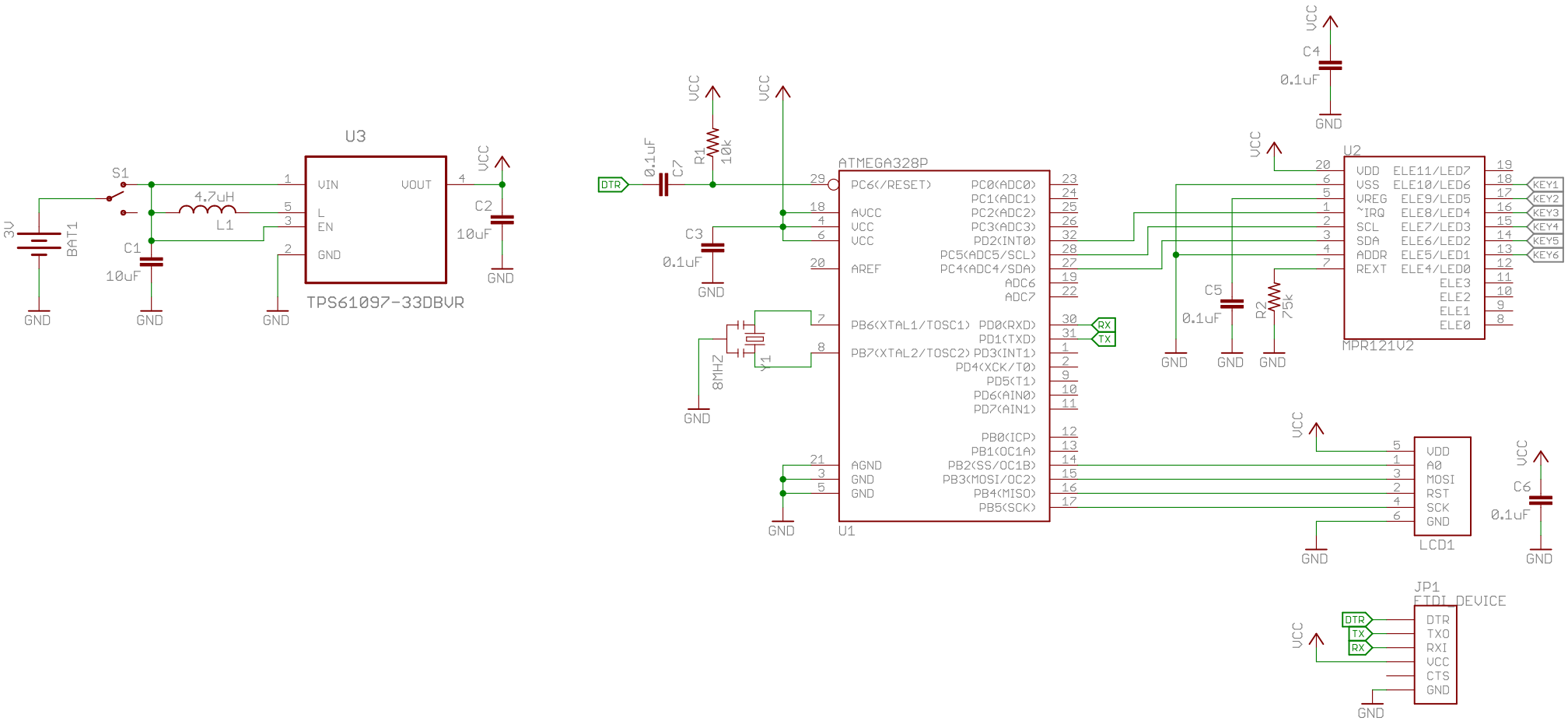
U3
TPS61097-33DBVR
VIN
VOUT
L
EN
GND
S1
BAT1
3V
C1
10uF
4.7uH
L1
C2
10uF
VCC
GND
ATMEGA328P
U1
PC6(/RESET)
AVCC
VCC
AREF
PB6(XTAL1/TOSC1)
PB7(XTAL2/TOSC2)
AGND
PC0(ADC0)
PC1(ADC1)
PC2(ADC2)
PC3(ADC3)
PD2(INT0)
PC5(ADC5/SCL)
PC4(ADC4/SDA)
ADC6
ADC7
PD0(RXD)
PD1(TXD)
PD3(INT1)
PD4(XCK/T0)
PD5(T1)
PD6(AIN0)
PD7(AIN1)
PB0(ICP)
PB1(OC1A)
PB2(SS/OC1B)
PB3(MOSI/OC2)
PB4(MISO)
PB5(SCK)
DTR
RX
TX
0.1uF
C7
R1
10k
C3
0.1uF
Y1
8MHZ
U2
MPR121V2
VDD
VSS
VREG
~IRQ
SCL
SDA
ADDR
REXT
ELE11/LED7
ELE10/LED6
ELE9/LED5
ELE8/LED4
ELE7/LED3
ELE6/LED2
ELE5/LED1
ELE4/LED0
ELE3
ELE2
ELE1
ELE0
KEY1
KEY2
KEY3
KEY4
KEY5
KEY6
C4
0.1uF
C5
0.1uF
R2
75k
LCD1
VDD
A0
MOSI
RST
SCK
GND
C6
0.1uF
JP1
FTDI_DEVICE
DTR
TXO
RXI
VCC
CTS
GND