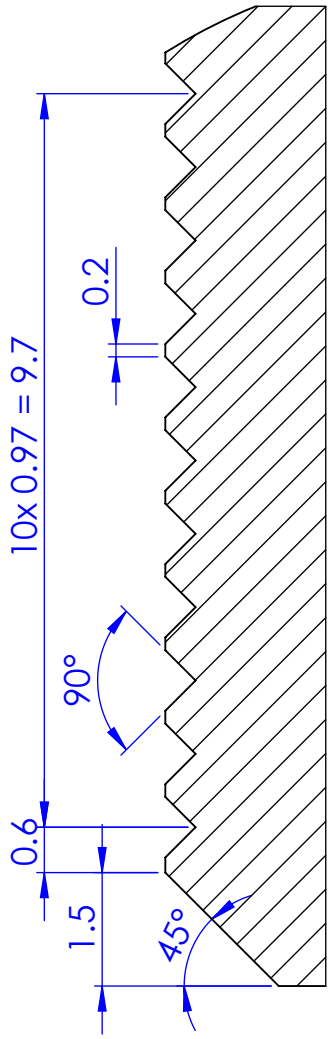

V (10 : 1)

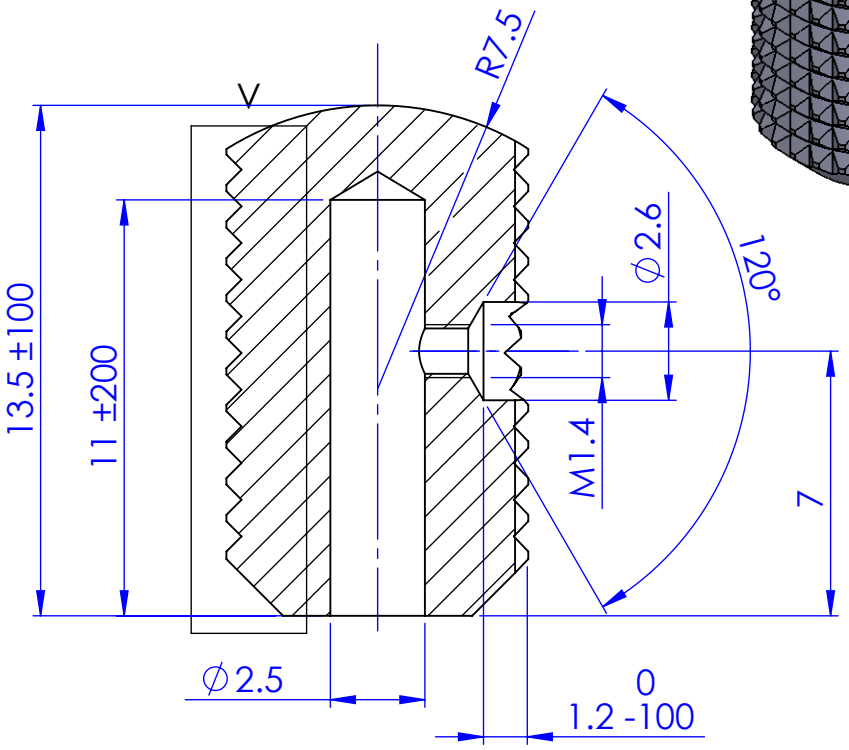

A-A

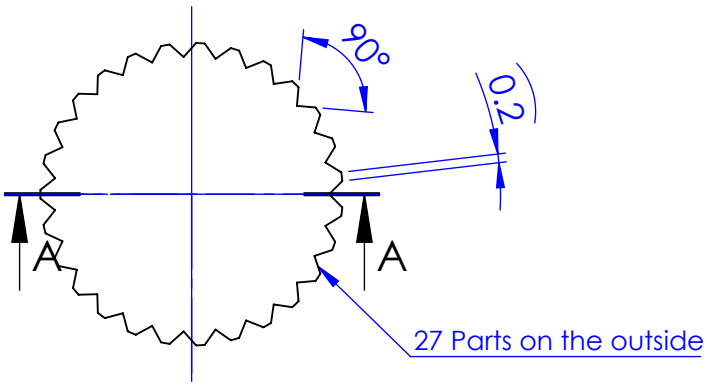

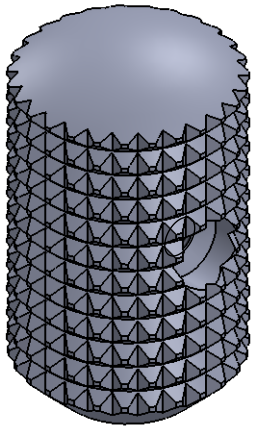

Qty	1									
Type	I									
Tolerances in um = 1/1000 mm										
Max. Deviation tolerated. Dimensional: ±50 um										
Max. Deviation tolerated. Angular : -							Chg.Nr.	Change	Date	Signed
* Sweeping attack max: 20 um ◇ Lateral runout max: 20 um					Material: Anticorodal B				Scale	Drawn T.V.N
Without * Sweeping attack max: 50 um Without ◇ Lateral runout max:					Type: I	Group			5:1	Checked CODY
Prevailing Surface finish ▽▽ (▽▽▽)					Crank Handle					Approved CODY
Surface treatment Black anodized/hard										
Heat treatment -					Assembly Number: 10245/2548		ReCurta		10012-7	