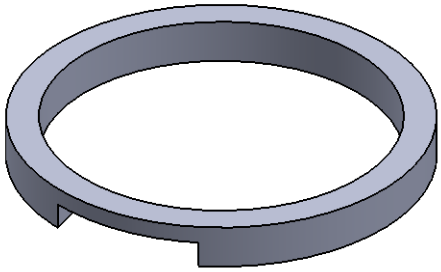

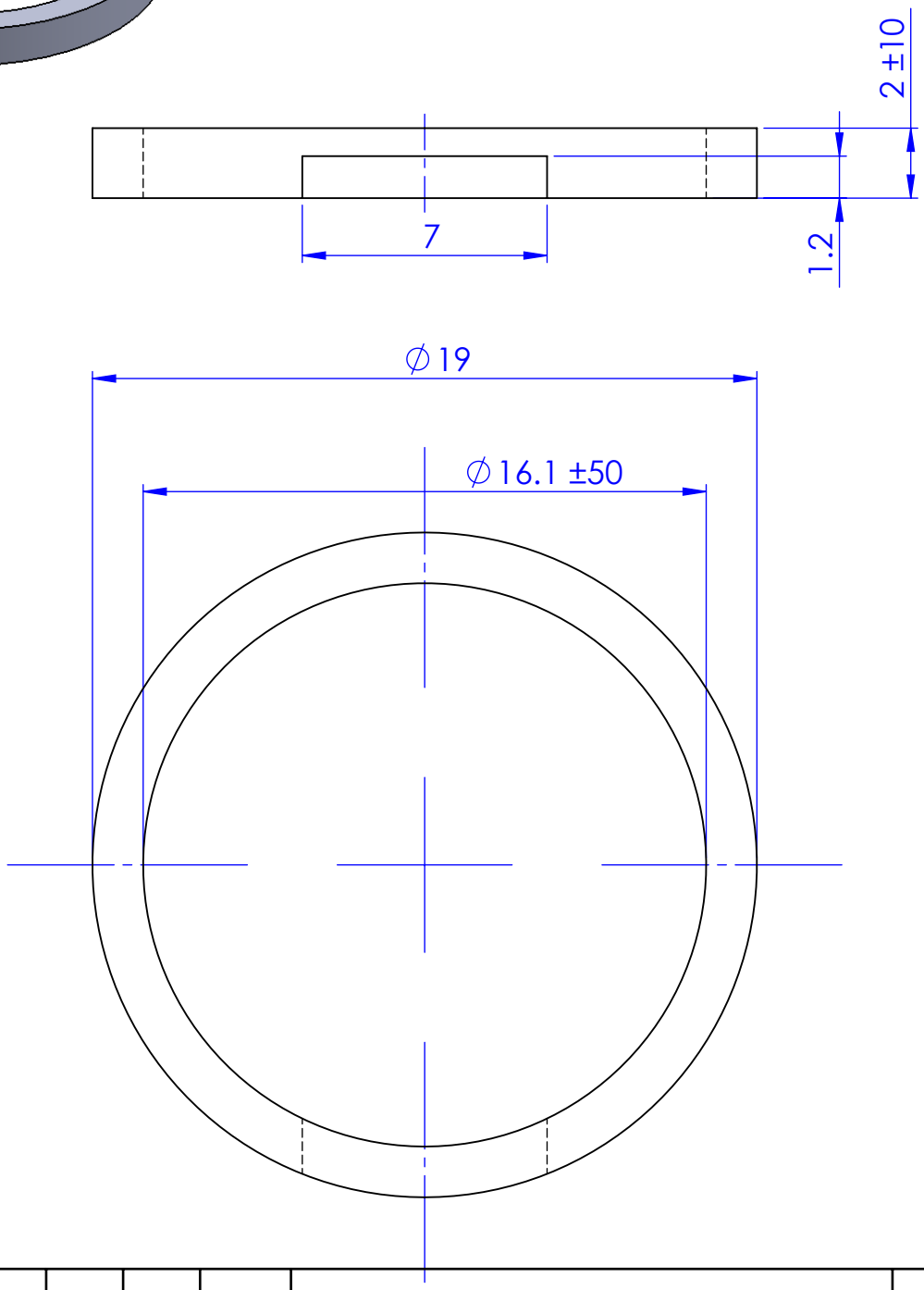

Qty	1										
Type	I										
Tolerances in um = 1/1000 mm											
Max. Deviation tolerated. Dimensional: ±100 um											
Max. Deviation tolerated. Angular : -							Chg.Nr.	Change		Date	Signed
* Sweeping attack max: 20 um ◇ Lateral runout max: 20 um					Material: Anticorodalrohr B19/1.5				Scale	Drawn	T.V.N
Without * Sweeping attack max: Without ◇ Lateral runout max:					Type: I	Group			5:1	Checked	CODY
Prevailing Surface finish ▽▽					Ten Bel Insert Ring					Approved	CODY
Surface treatment -							ReCurta		10103-1		
Heat treatment -					Assembly Number: 10206						