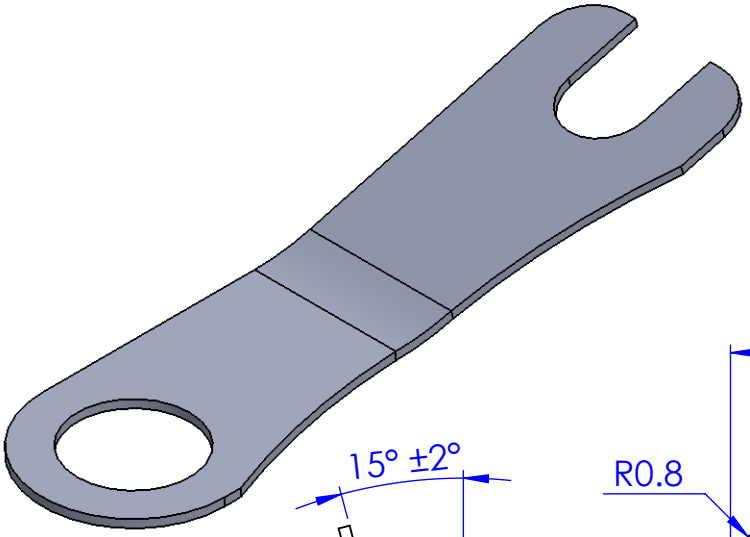

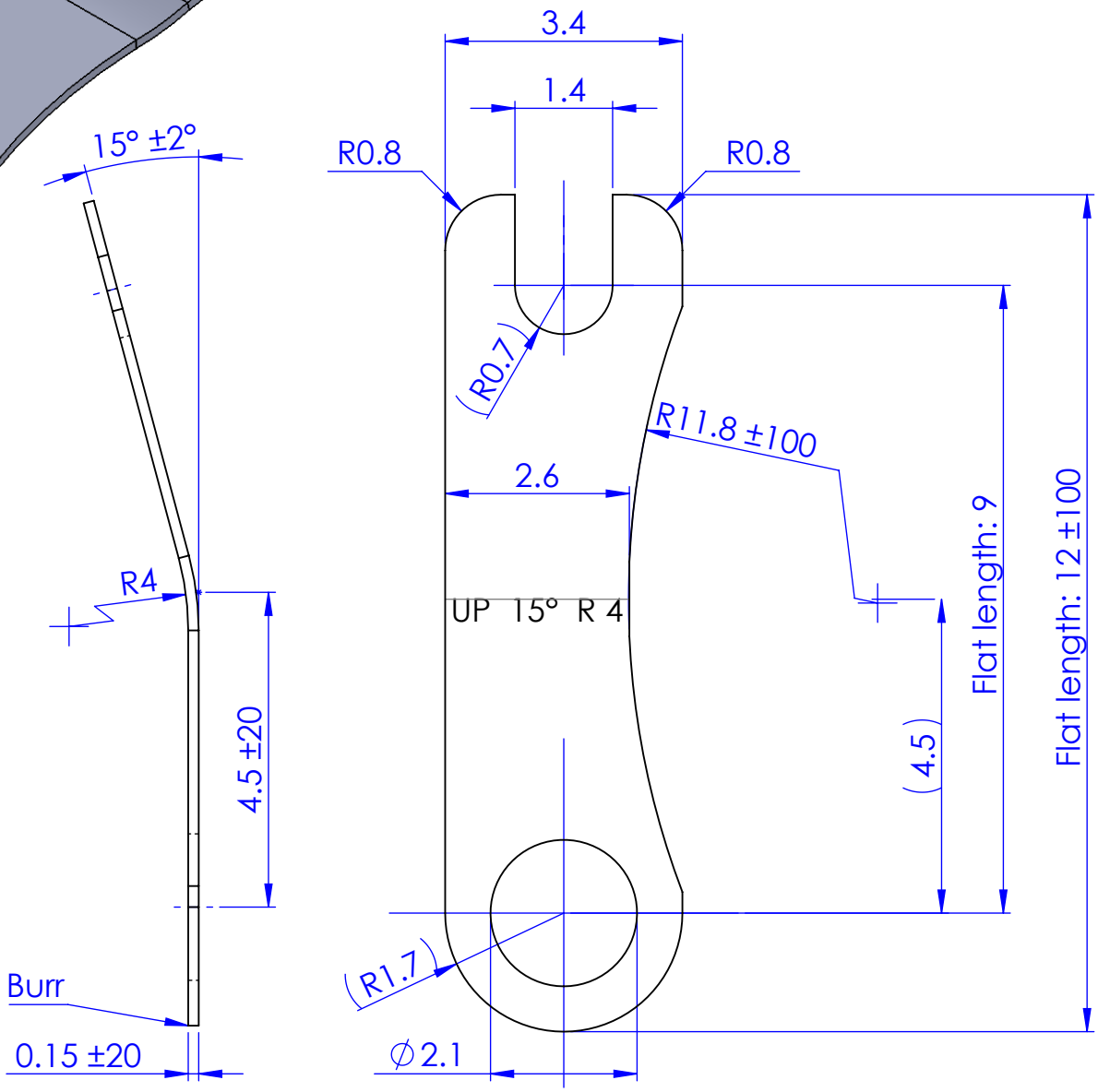

Dimension in bracket are auxiliary dimension without consideration of tolerance

Qty	1									
Type	I									
Tolerances in um = 1/1000 mm										
Max. Deviation tolerated. Dimensional: ±50 um										
Max. Deviation tolerated. Angular :							Chg.Nr.	Change	Date	Signed
* Sweeping attack max: 20 um ◇ Lateral runout max: 20 um					Material: Federbandstahl 0.15 ±20			Scale	Drawn	T.V.N
								10:1	Checked	CODY
Without * Sweeping attack max: Without ◇Lateral runout max:					Type: I/II	Group				
Prevailing Surface finish					Flat Spring				Approved	CODY
Surface treatment Nickel							ReCurta		10033-6	
Heat treatment -					Assembly Number: 10244/2546					