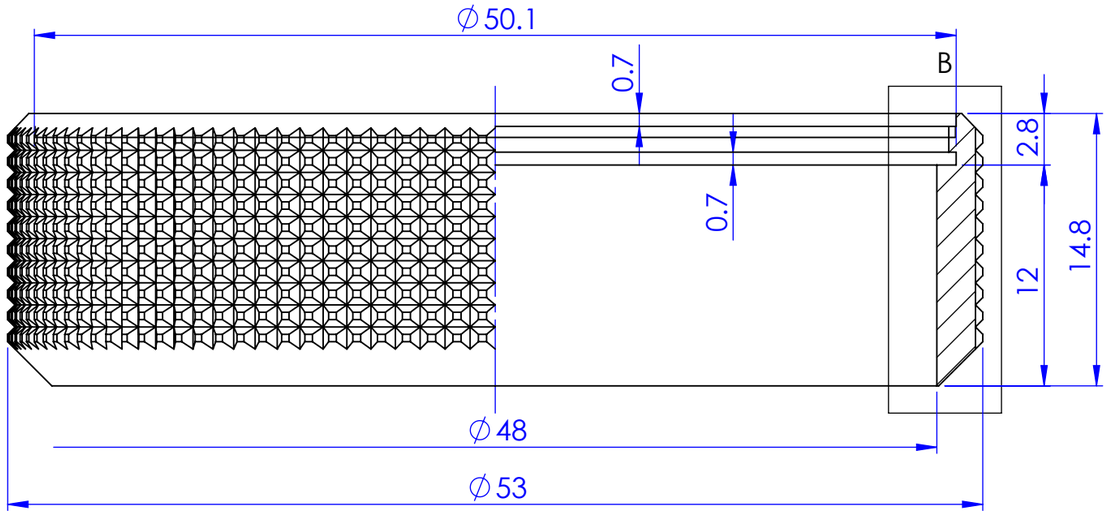

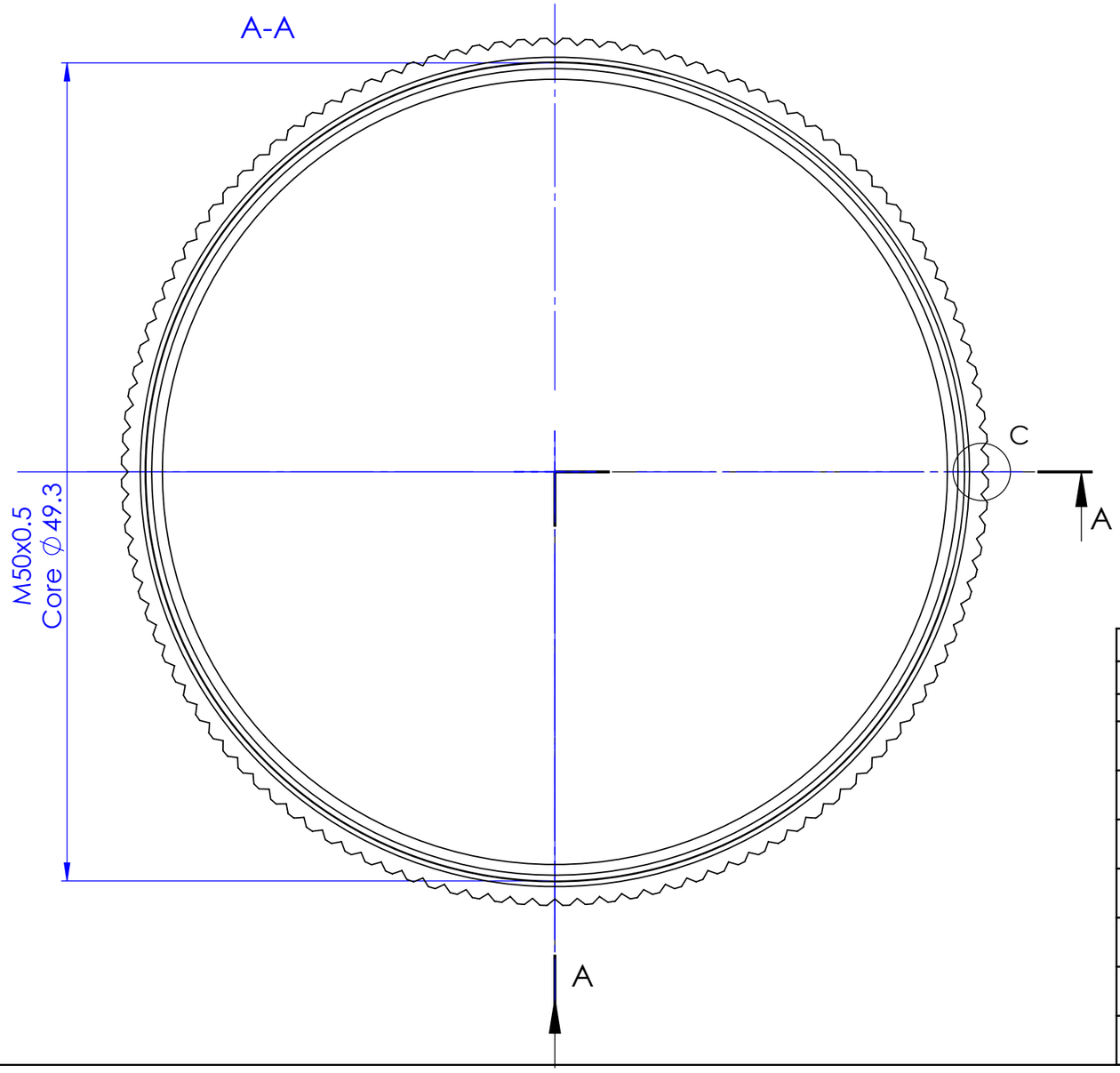

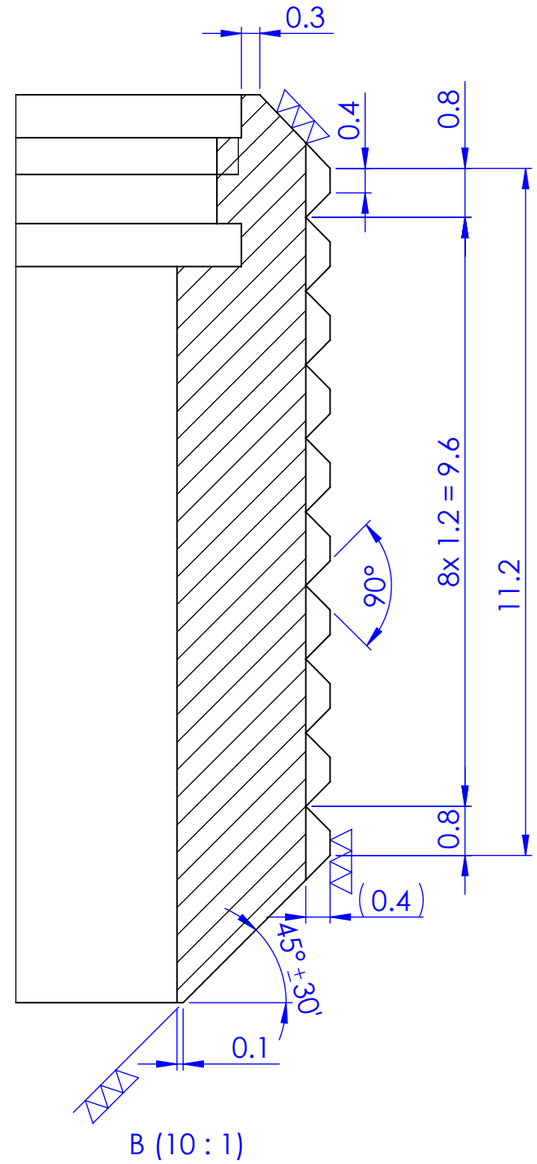

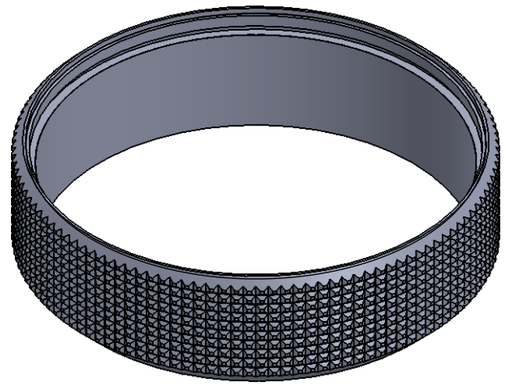

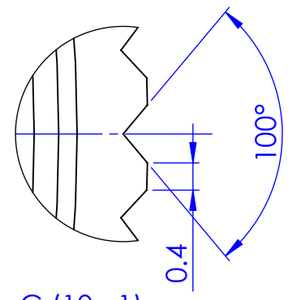

C (10 : 1)

Qty	1									
Type	I									
Tolerances in um = 1/1000 mm										
Max. Deviation tolerated. Dimensional: ±50 um										
Max. Deviation tolerated. Angular : ±1°							Chg.Nr.	Change	Date	Signed
* Sweeping attack max: 20 um ◇ Lateral runout max: 20 um					Material: Anticorodal B ∅ 54 /3.5			Scale	Drawn	T.V.N
Without * Sweeping attack max: 50 um Without ◇ Lateral runout max: 50 um					Type: I	Group		3:1	Checked	CODY
Prevailing Surface finish ▽▽(▽▽▽)					Carriage Ring				Approved	CODY
Surface treatment Black anodized										
Heat treatment -					Assembly Number: 10243		ReCurta		10088-4a	