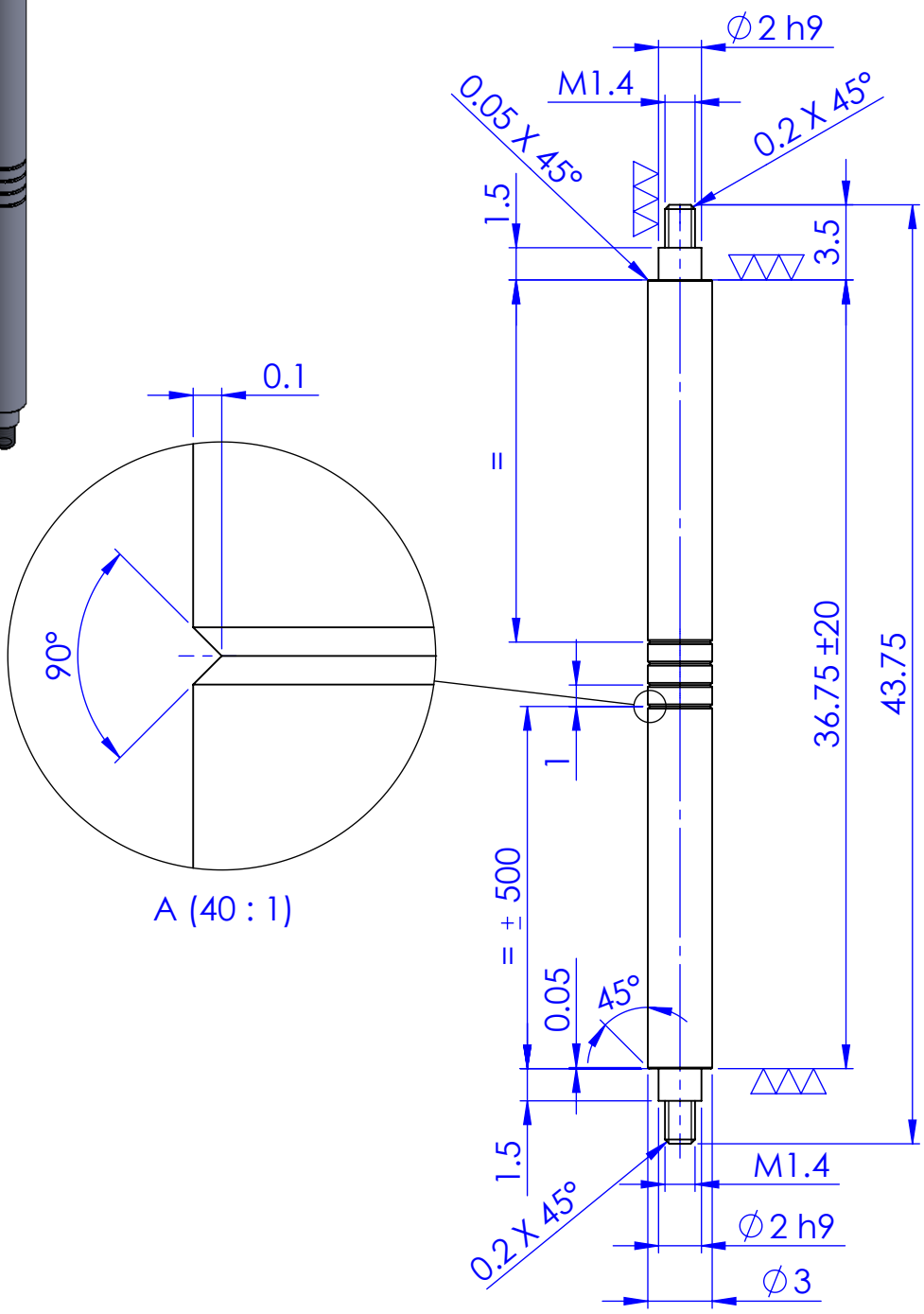

Qty	3									
Type	I									
Tolerances in um = 1/1000 mm										
Max. Deviation tolerated. Dimensional: ±100 um										
Max. Deviation tolerated. Angular :						Chg.Nr.	Change		Date	Signed
* Sweeping attack max: 20 um ◇ Lateral runout max: 20 um					Material: Messing 58 Pb ∅ 3			Scale	Drawn	T.V.N
Without * Sweeping attack max:50 um Without ◇ Lateral runout max: 50 um					Type: I Group			3:1	Checked	CODY
Prevailing Surface finish ▽▽ (▽▽▽)					Support Colunm				Approved	CODY
Surface treatment -							ReCurta		10064-4	
Heat treatment					Assembly Number: 10232					