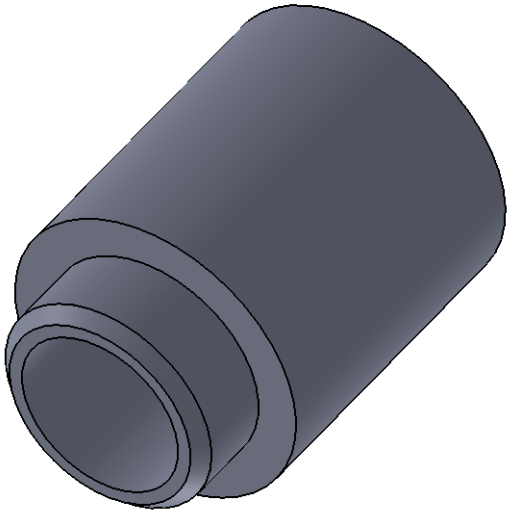

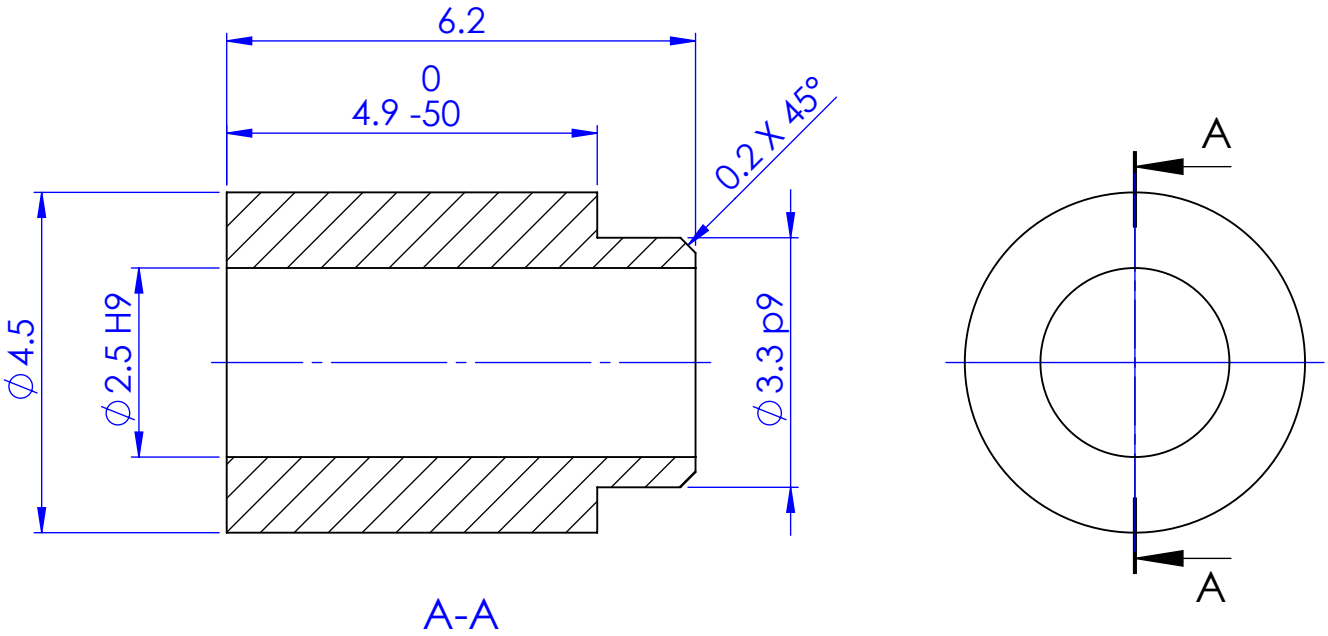

Dimension in bracket are auxiliary dimension without consideration of tolerance

Qty	1									
Type	I									
Tolerances in um = 1/1000 mm										
Max. Deviation tolerated. Dimensional: ±200 um										
Max. Deviation tolerated. Angular :							Chg.Nr.	Change	Date	Signed
* Sweeping attack max: 20 um ◇ Lateral runout max: 20 um					Material: Anticorodal Ø 4.5			Scale	Drawn	T.V.N
Without * Sweeping attack max: 50 um Without ◇ Lateral runout max: 50 um					Type: I	Group		10:1	Checked	CODY
Prevailing Surface finish ▽▽					Barrel Of Zero Positioning Lever				Approved	CODY
Surface treatment -										
Heat treatment					Assembly Number: 10225		ReCurta		10125-2	