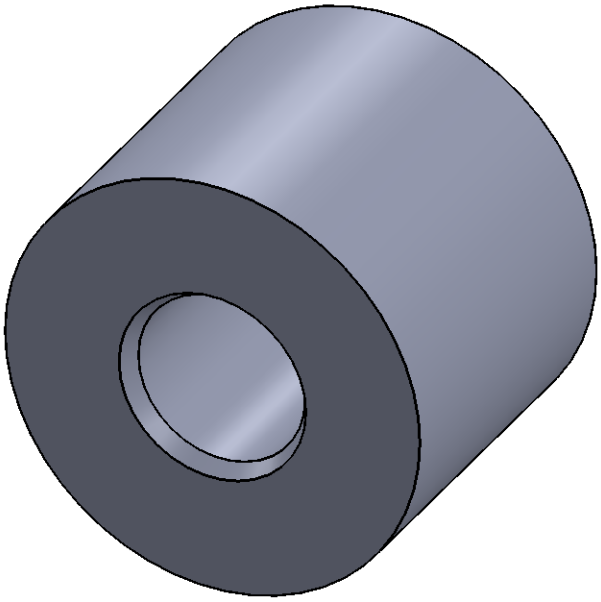

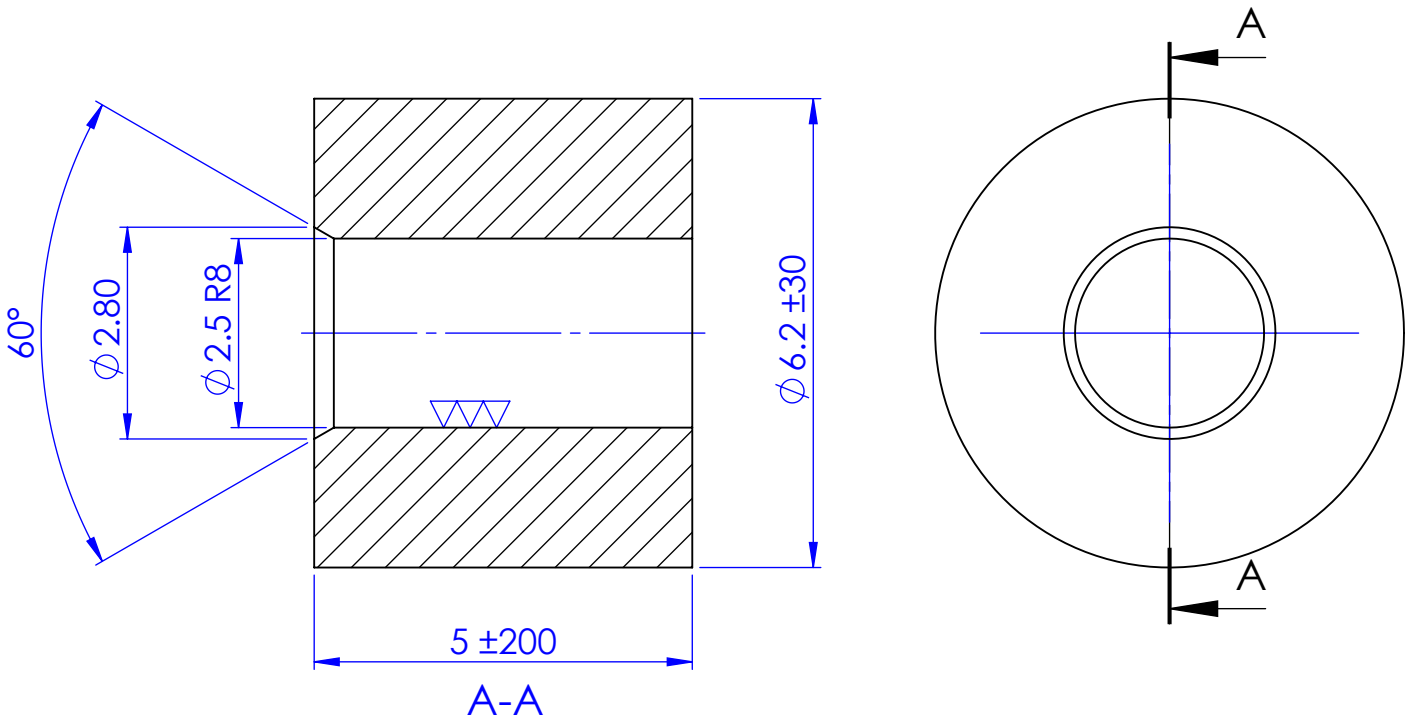

Qty	8										
Type	I										
Tolerances in um = 1/1000 mm											
Max. Deviation tolerated. Dimensional: ±50 um											
Max. Deviation tolerated. Angular :							Chg.Nr.	Change		Date	Signed
* Sweeping attack max: 20 um ◇ Lateral runout max: 20 um					Material: Anticorodal B ∅ 6.5				Scale	Drawn	T.V.N
Without * Sweeping attack max: 40 um Without ◇Lateral runout max:					Type: I	Group			10:1	Checked	CODY
Prevailing Surface finish ▽▽ (▽▽▽)					Number Dial					Approved	CODY
Surface treatment Black Anodized											
Heat treatment					Assembly Number: 10212		ReCurta		10029-5		