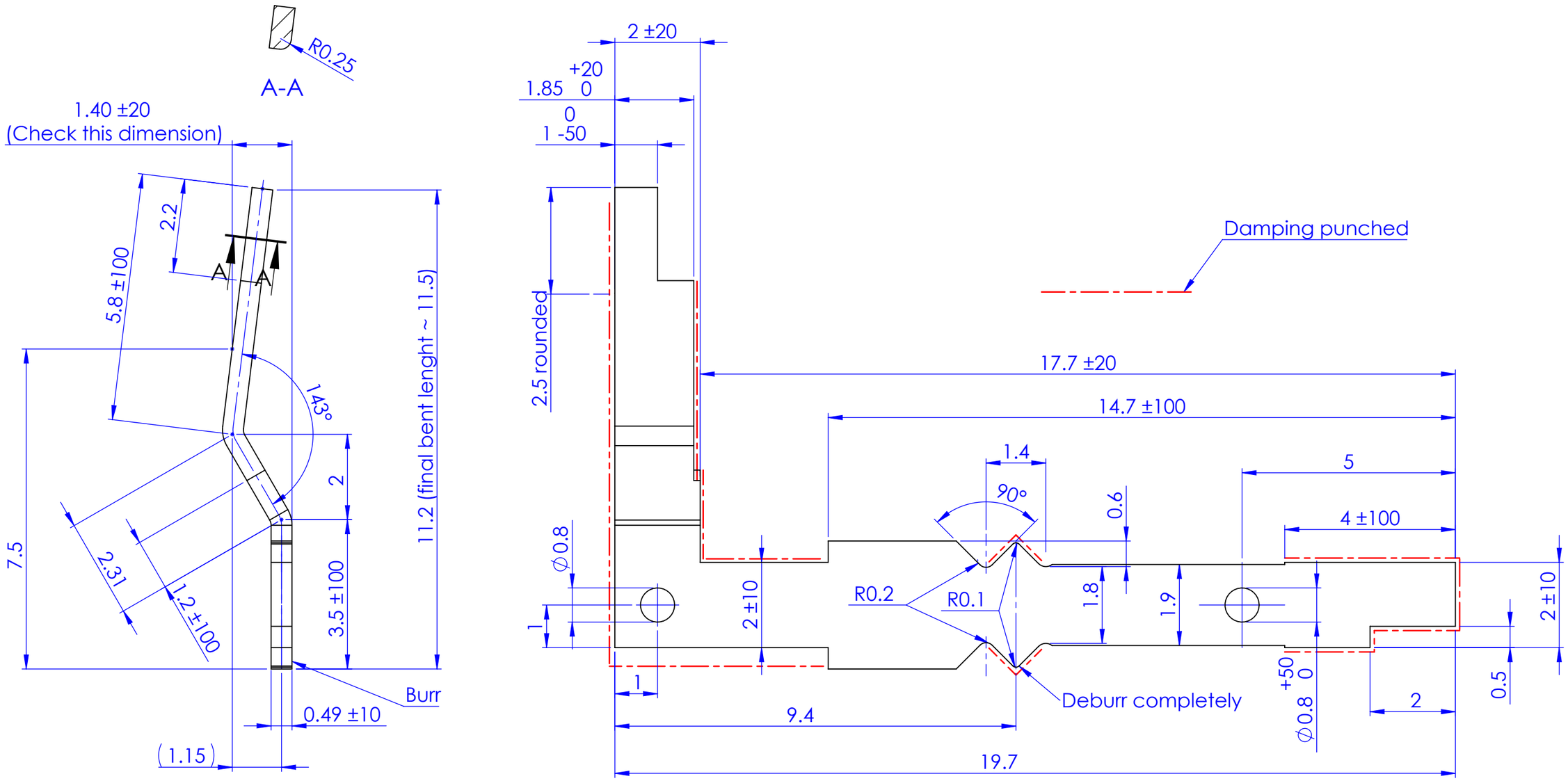

Dimension in bracket are auxiliary dimension without consideration of tolerance

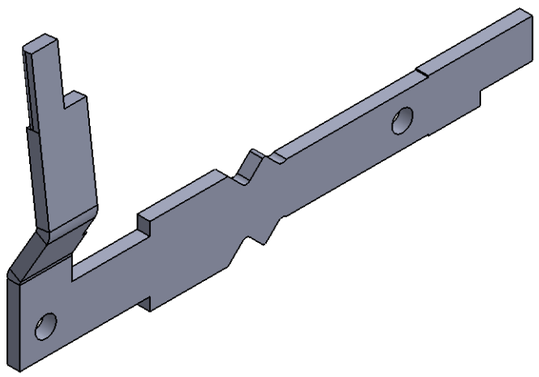

Qty	10									
Type	I									
Tolerances in um = 1/1000 mm										
Max. Deviation tolerated. Dimensional: ±50 um										
Max. Deviation tolerated. Angular : ±30'						Chg.Nr.	Change		Date	Signed
* Sweeping attack max: - ◇ Lateral runout max: -					Material: Neusilber Brin. 200-220, 0.49 ±10			Scale	Drawn	T.V.N
Without * Sweeping attack max: 50 um Without ◇ Lateral runout max: -					Type: I	Group		10:1	Checked	CODY
Prevailing Surface finish					Ten Carry Level For Results				Approved	CODY
Surface treatment -										
Heat treatment -					Assembly Number: 10234		ReCurta		10005-9b	