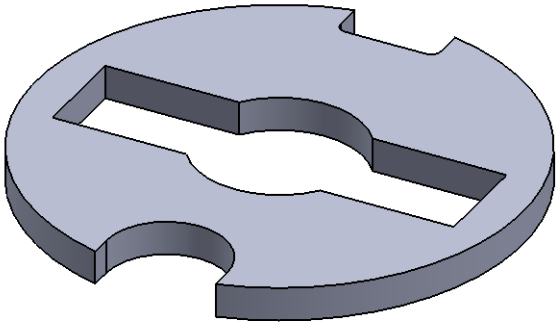

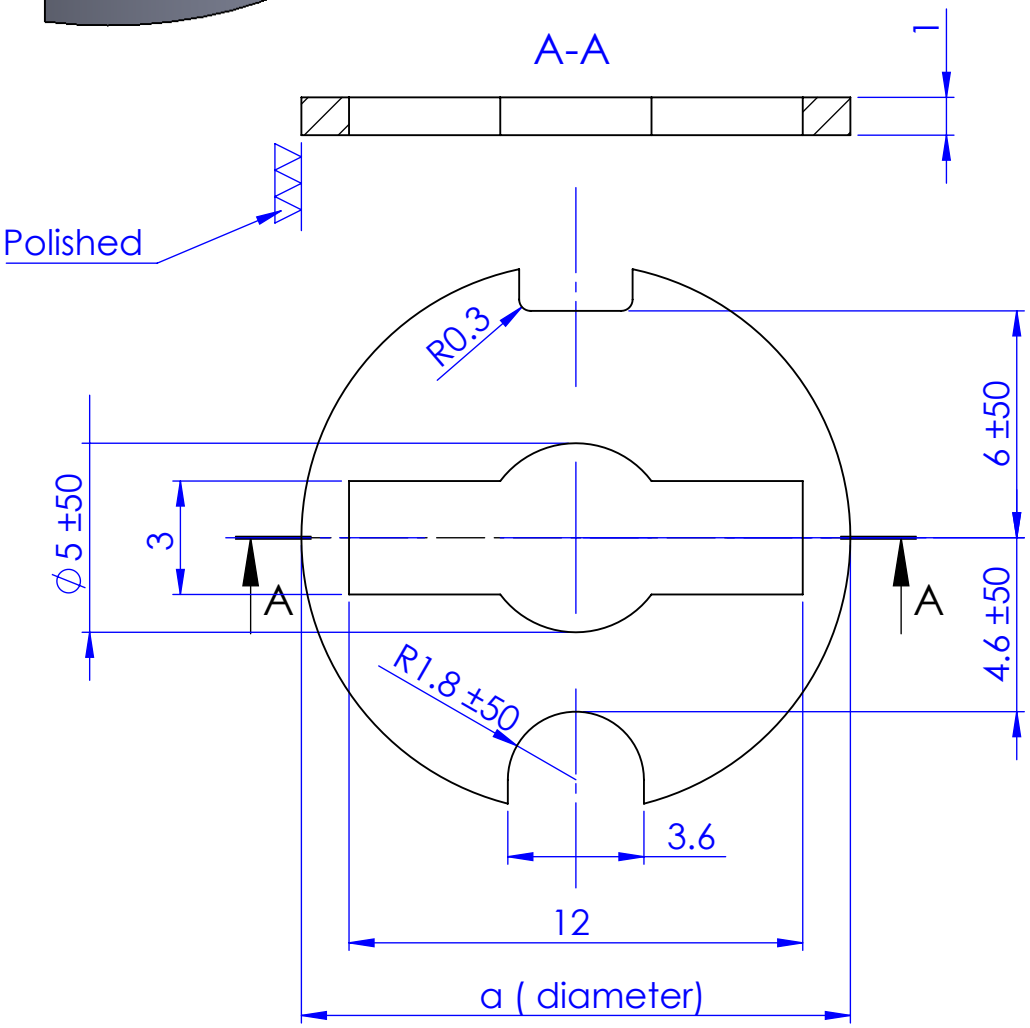

3	14.52 - 14.53
2	14.50 - 14.51
1	14.48 - 14.49
Pos	Dimensions of a

Qty	1									
Type	I									
Tolerances in um = 1/1000 mm										
Max. Deviation tolerated. Dimensional: ±100 um										
Max. Deviation tolerated. Angular :						Chg.Nr.	Change		Date	Signed
* Sweeping attack max: - ◇ Lateral runout max: -					Material: Nichtr.Band.St			Scale	Drawn	T.V.N
Without * Sweeping attack max: Without ◇Lateral runout max:					Type: I	Group		5:1	Checked	CODY
Prevailing Surface finish					Ten Bell Support Plate				Approved	CODY
Surface treatment -							ReCurta		10120	
Heat treatment					Assembly Number: 10206					