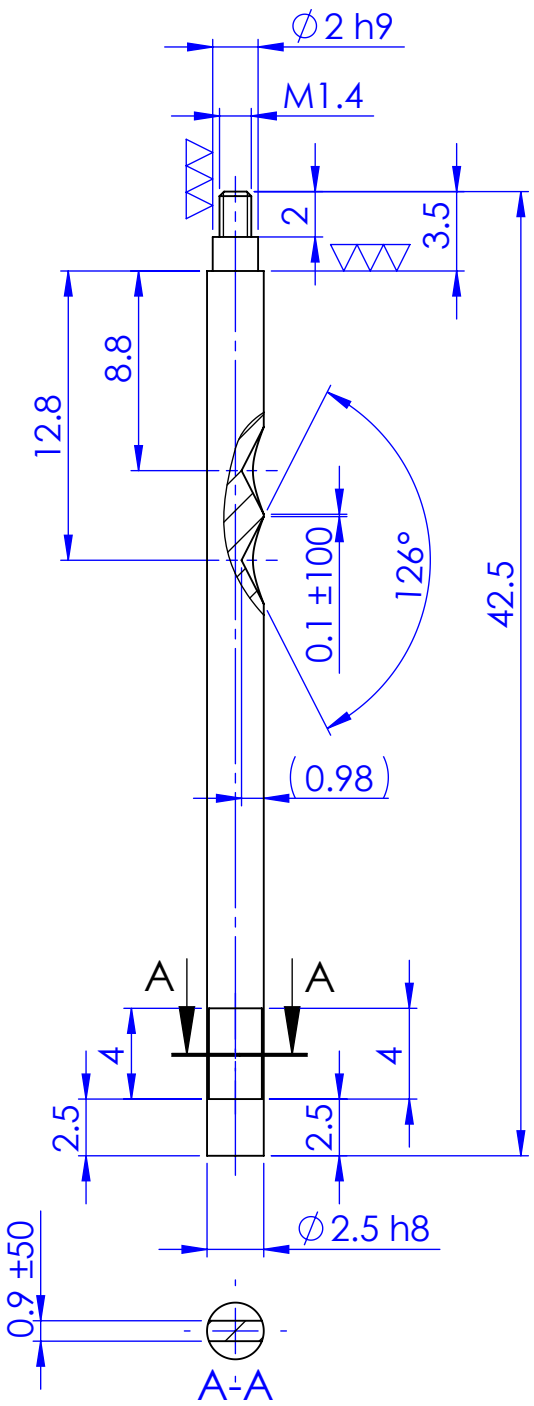

Qty	1									
Type	I									
Tolerances in um = 1/1000 mm										
Max. Deviation tolerated. Dimensional: ±100 um										
Max. Deviation tolerated. Angular : ±30'						Chg.Nr.	Change		Date	Signed
* Sweeping attack max: 20 um ◇ Lateral runout max: 20 um					Material: Nichtrost.Stahl RRMD ∅ 2.5 - h9			Scale	Drawn	T.V.N
Without * Sweeping attack max:50 um Without ◇ Lateral runout max:					Type: I	Group		3:1	Checked	CODY
Prevailing Surface finish ▽▽(▽▽▽)					Reversing Lever Axle				Approved	CODY
Surface treatment -							ReCurta		10065-6	
Heat treatment					Assembly Number: 10241					