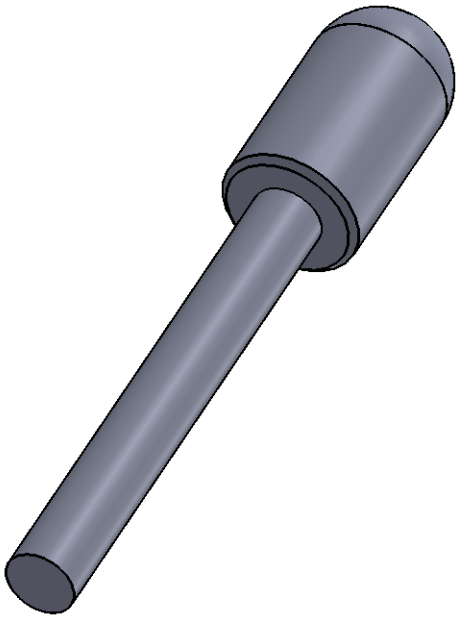

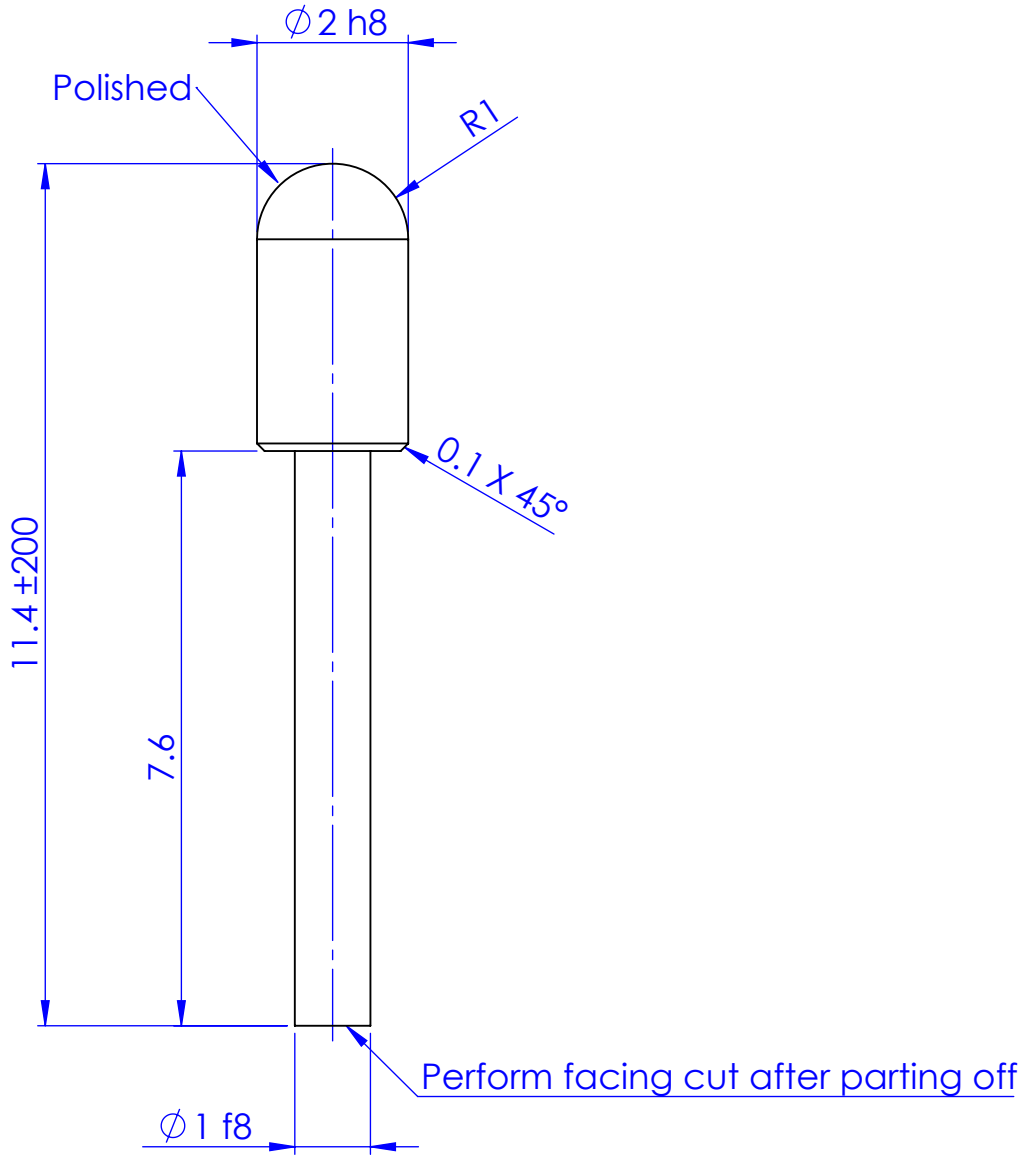

Qty	1										
Type	I										
Tolerances in um = 1/1000 mm											
Max. Deviation tolerated. Dimensional: ±100 um											
Max. Deviation tolerated. Angular :							Chg.Nr.	Change		Date	Signed
* Sweeping attack max: 20 um ◇ Lateral runout max: 20 um					Material:	nchtr.St.1)RRMD; 2)Sandvik 2C34A; 3)Stainless 32 ∅2 h8			Scale	Drawn	T.V.N
Without * Sweeping attack max: 50 um Without ◇Lateral runout max: 50 um					Type: I	Group			10:1	Checked	CODY
Prevailing Surface finish ▽▽▽					Clearing Plate Plunger					Approved	CODY
Surface treatment -											
Heat treatment					Assembly Number: 10210		ReCurta		10024-4		