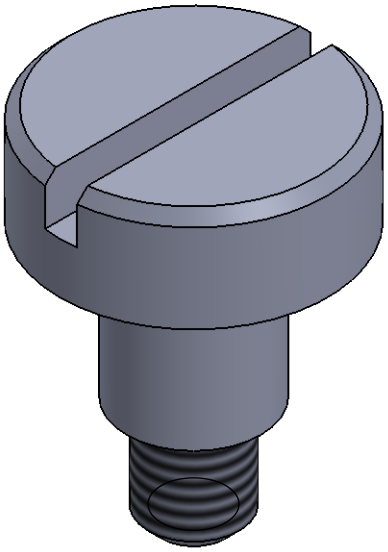

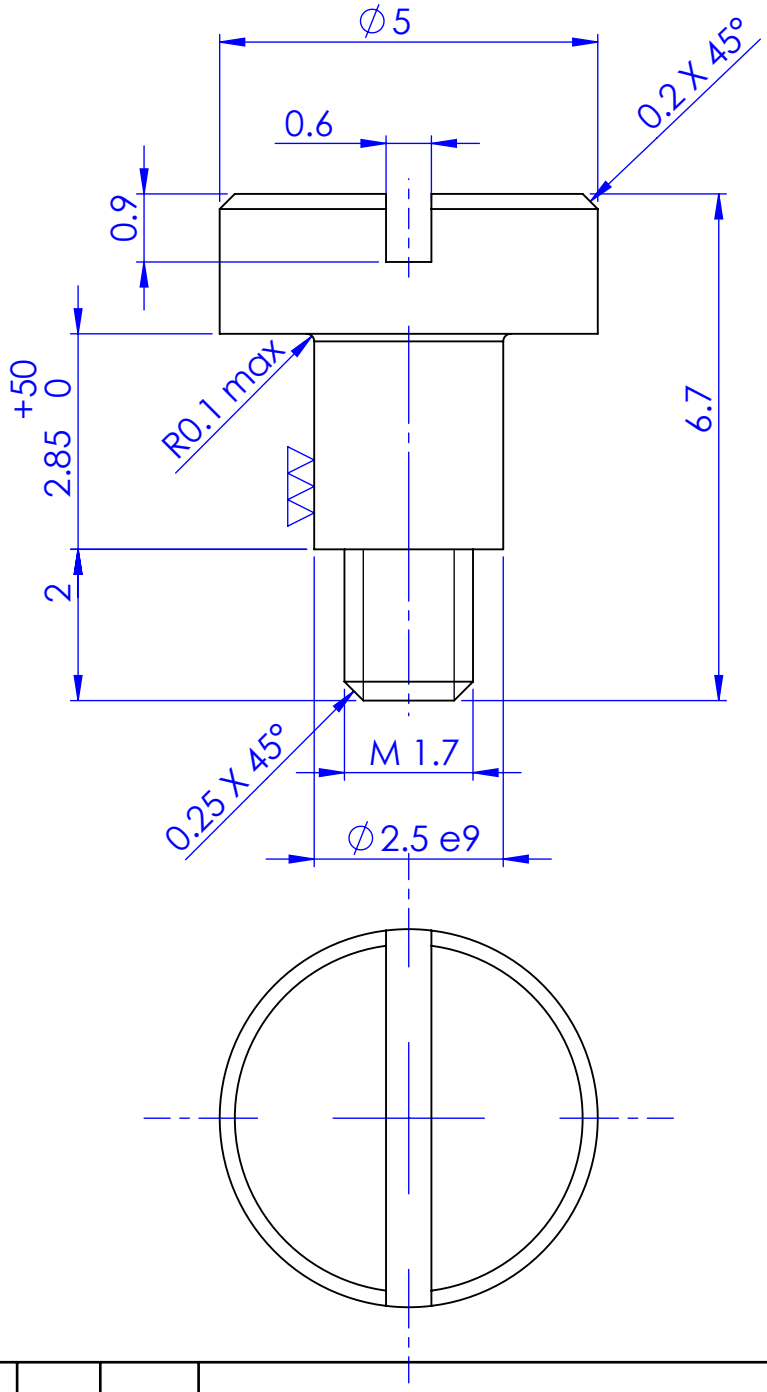

Qty	1									
Type	I									
Tolerances in um = 1/1000 mm										
Max. Deviation tolerated. Dimensional: ±50 um										
Max. Deviation tolerated. Angular :							Chg.Nr.	Change	Date	Signed
* Sweeping attack max: 20 um ◇ Lateral runout max: 20 um					Material: 58 Pb ∅ 5				Drawn	T.V.N
Without * Sweeping attack max: Without ◇Lateral runout max:					Type: I	Group		Scale 10:1	Checked	CODY
Prevailing Surface finish ▽▽ (▽▽▽)					NPR Shoulder Screw				Approved	CODY
Surface treatment -										
Heat treatment					Assembly Number: 10234		ReCurta		10059-2	