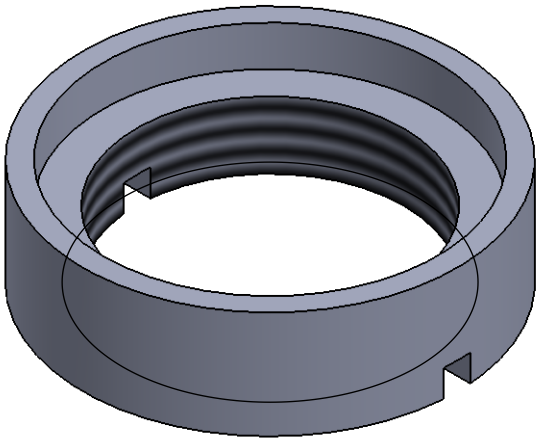

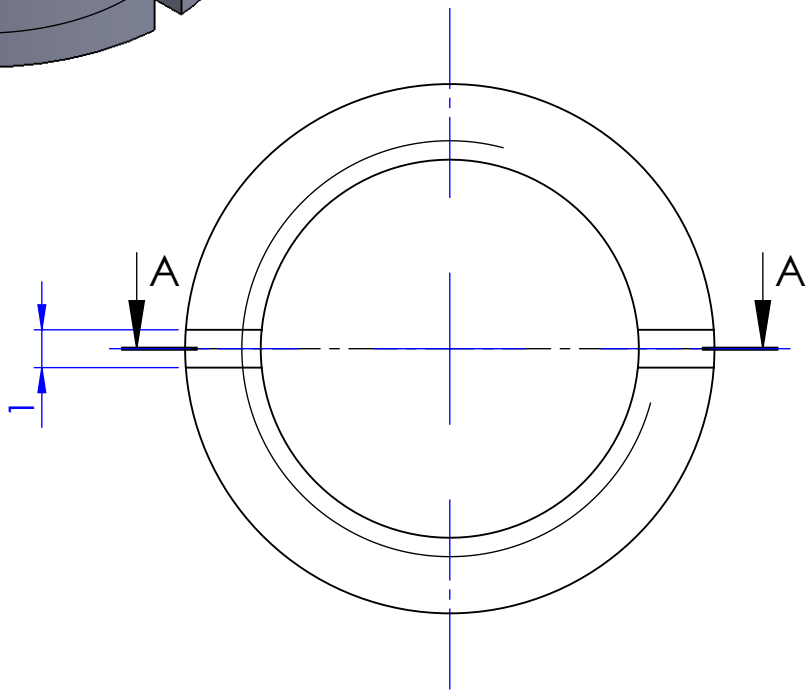

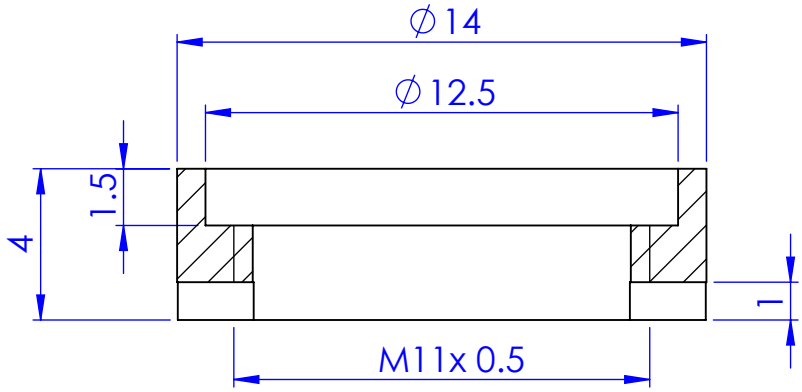

A-A

Qty	1									
Type	I									
Tolerances in um = 1/1000 mm										
Max. Deviation tolerated. Dimensional: ±100 um										
Max. Deviation tolerated. Angular :						Chg.Nr.	Change		Date	Signed
* Sweeping attack max: 20 um ◇ Lateral runout max: 20 um					Material: Anticorodal B ∅14			Scale	Drawn	T.V.N
Without * Sweeping attack max: Without ◇ Lateral runout max:					Type: I	Group		5:1	Checked	CODY
Prevailing Surface finish ▽▽					Carriage Holding Nut				Approved	CODY
Surface treatment Coloress anodized(hard)							ReCurta		10026	
Heat treatment					Assembly Number: 10210					