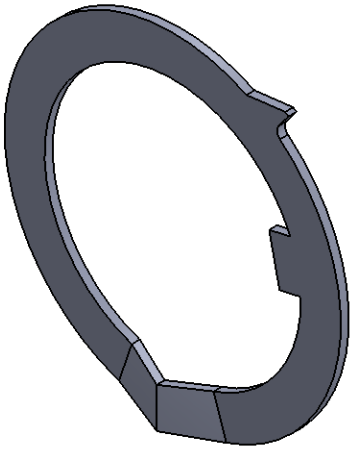

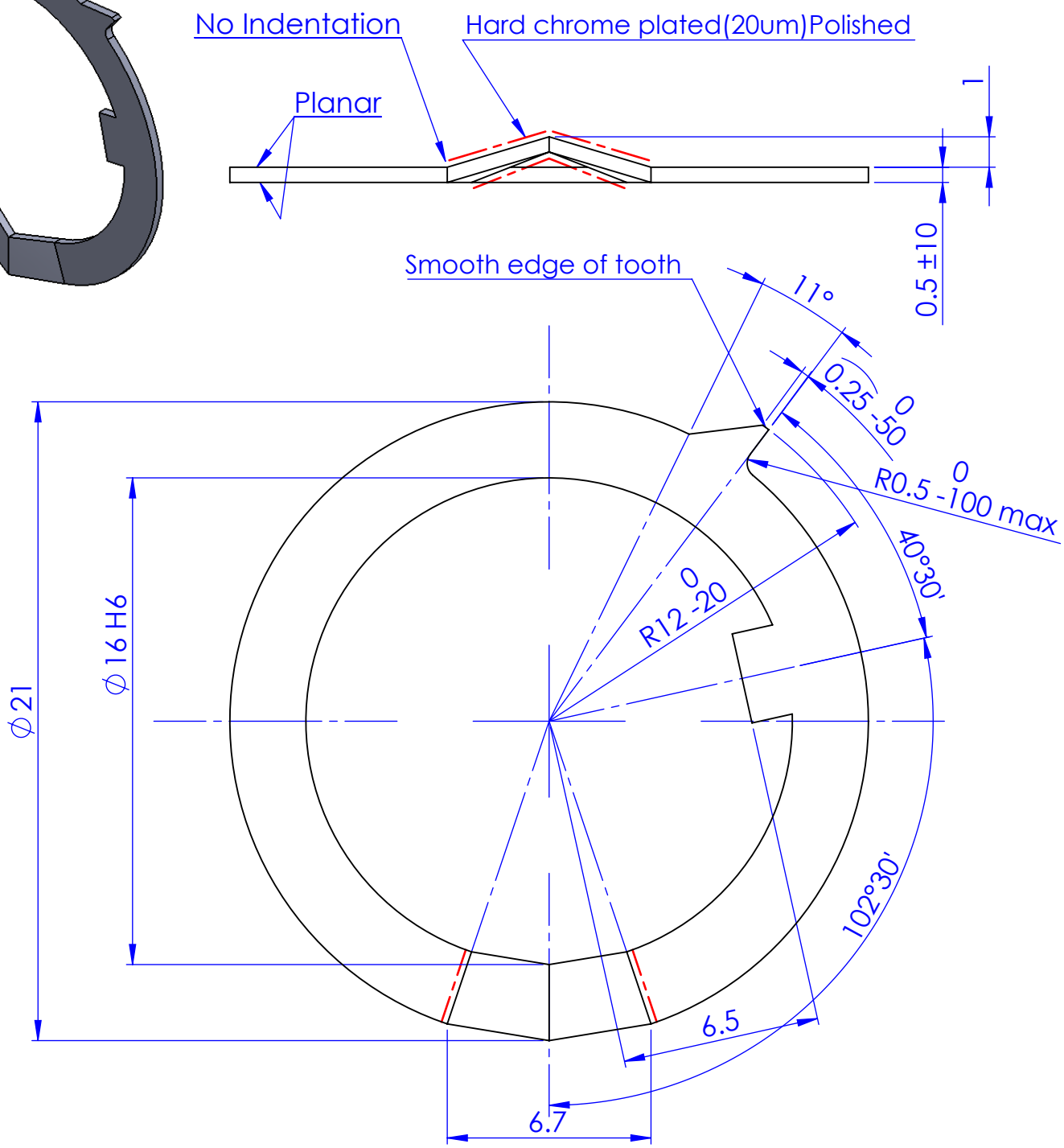

Qty	1										
Type	I										
Tolerances in um = 1/1000 mm											
Max. Deviation tolerated. Dimensional: ±100 um											
Max. Deviation tolerated. Angular : ±30'							Chg.Nr.	Change		Date	Signed
* Sweeping attack max: 20 um ◇ Lateral runout max: 20 um					Material: Neusilber 0.5 ±10 Brin. 230-240 °				Scale	Drawn	T.V.N
Without * Sweeping attack max: - Without ◇Lateral runout max:					Type: I	Group			5:1	Checked	CODY
Prevailing Surface finish					Turn Counter Carry Increment					Approved	CODY
Surface treatment -											
Heat treatment					Assembly Number: 10206		ReCurta			10101-5	