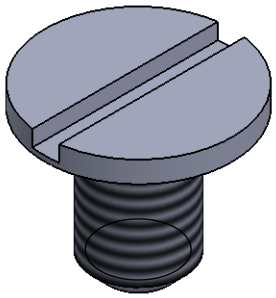

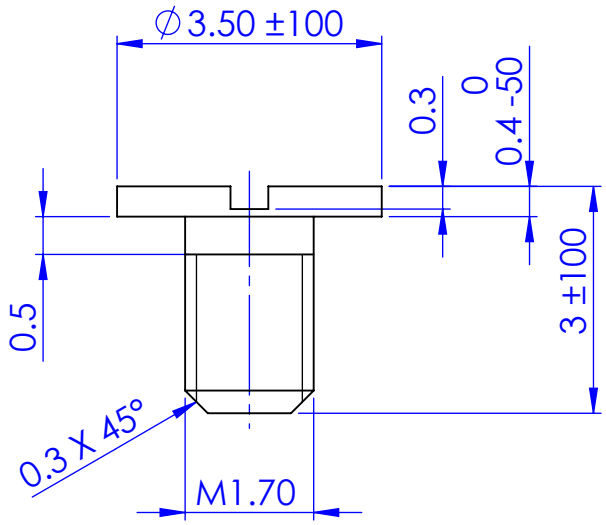

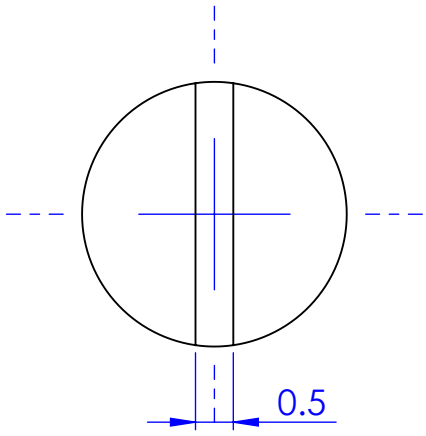

Qty	2									
Type	I									
Tolerances in um = 1/1000 mm										
Max. Deviation tolerated. Dimensional: ±50 um										
Max. Deviation tolerated. Angular :						Chg.Nr.	Change		Date	Signed
* Sweeping attack max: 20 um ◇ Lateral runout max: 20 um					Material: Ms 58 Pb ∅ 3.5			Scale	Drawn	T.V.N
Without * Sweeping attack max: Without ◇Lateral runout max:					Type: I	Group		10:1	Checked	CODY
Prevailing Surface finish ▽▽					Cylindrical Screws				Approved	CODY
Surface treatment -							ReCurta		10048-2	
Heat treatment					Assembly Number: 10213					