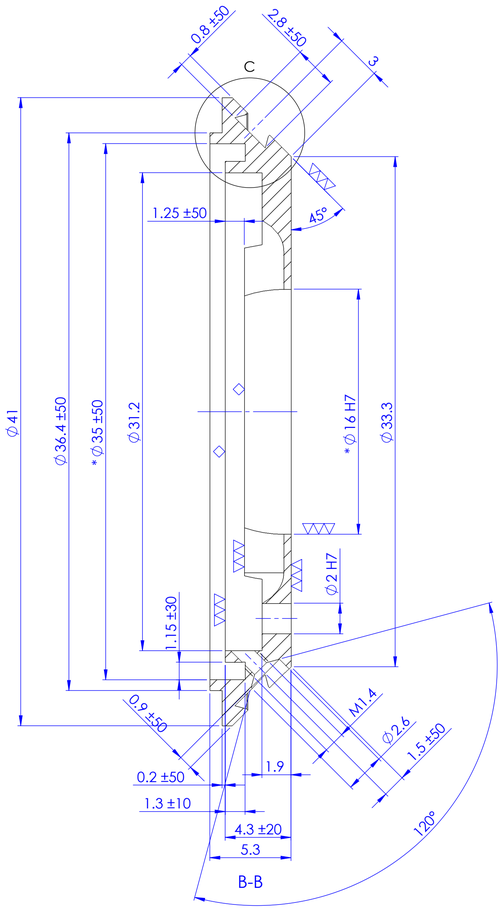

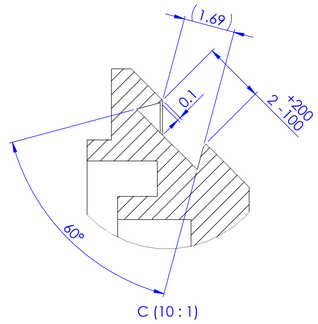

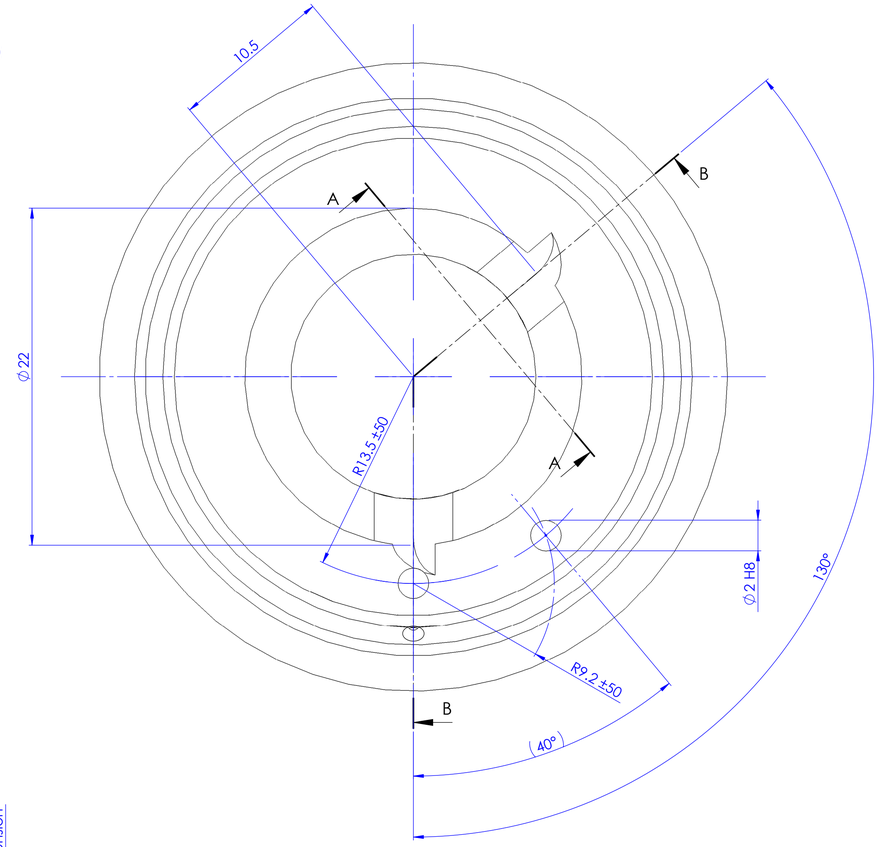

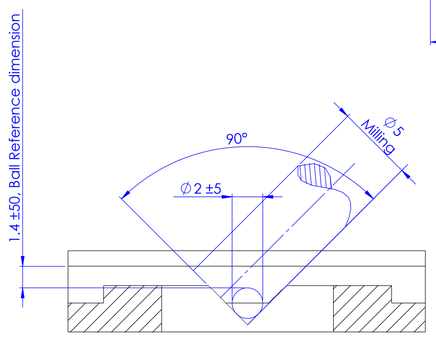

A-A

Dimension in bracket are auxiliary dimension without consideration of tolerance

Qty	1									
Type	I									
Tolerances in um = 1/1000 mm										
Max. Deviation tolerated. Dimensional: ±100 um										
Max. Deviation tolerated. Angular : ±1°						Chg.Nr.	Change		Date	Signed
* Sweeping attack max: 20 um					Material: Anticorodal B ∅42			Scale	Drawn	T.V.N
◇ Lateral runout max: 20 um					Type: I	Group		5:1	Checked	CODY
Without * Sweeping attack max: 50 um										
Without ◇ Lateral runout max: 50 um									Approved	CODY
Prevailing Surface finish ▽▽(▽▽▽▽)					Clearing Plate Body					
Surface treatment Black anodized hard										
Heat treatment					Assembly Number: 10247		ReCurta	10030-12a		