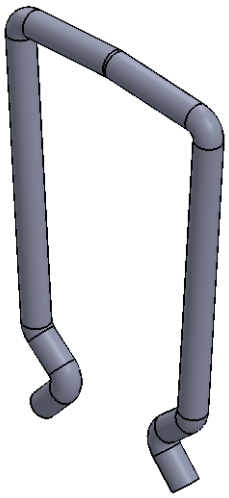

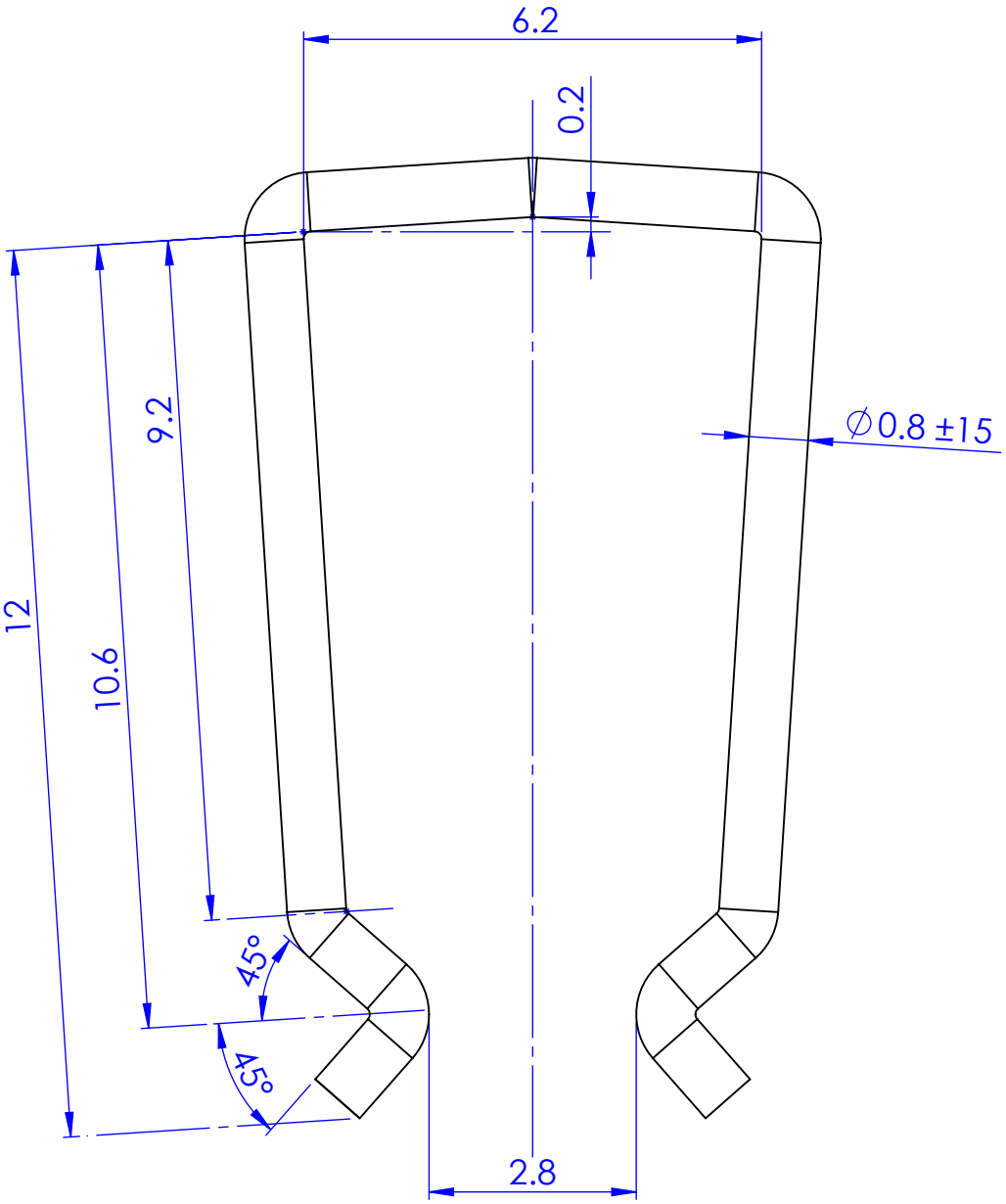


| | | | | | | | | | | | |
|---|---|---|---|---|---|---|---|---|---|---|---|
| Qty | 1 | | | | | | | | | | |
| Type | I | | | | | | | | | | |
| Tolerances in um = 1/1000 mm | | | | | | | | | | | |
| Max. Deviation tolerated. Dimensional: ±100 um | | | | | | | | | | | |
| Max. Deviation tolerated. Angular : ±30' | | | | | | | Chg.Nr. | Change | | Date | Signed |
| * Sweeping attack max: 20 um ◇ Lateral runout max: 20 um | | | | | Material: Nichtrost Federstahldraht ∅ 0.8 | | | | Scale | Drawn | T.V.N |
| Without * Sweeping attack max: Without ◇Lateral runout max: | | | | | Type: I | Group | | | 10:1 | Checked | CODY |
| Prevailing Surface finish | | | | | Disc SPring Clip | | | | | Approved | CODY |
| Surface treatment - | | | | | | | | | | | |
| Heat treatment | | | | | Assembly Number: 10231/2500 /2520 | | ReCurta | | 10118-2 | | |