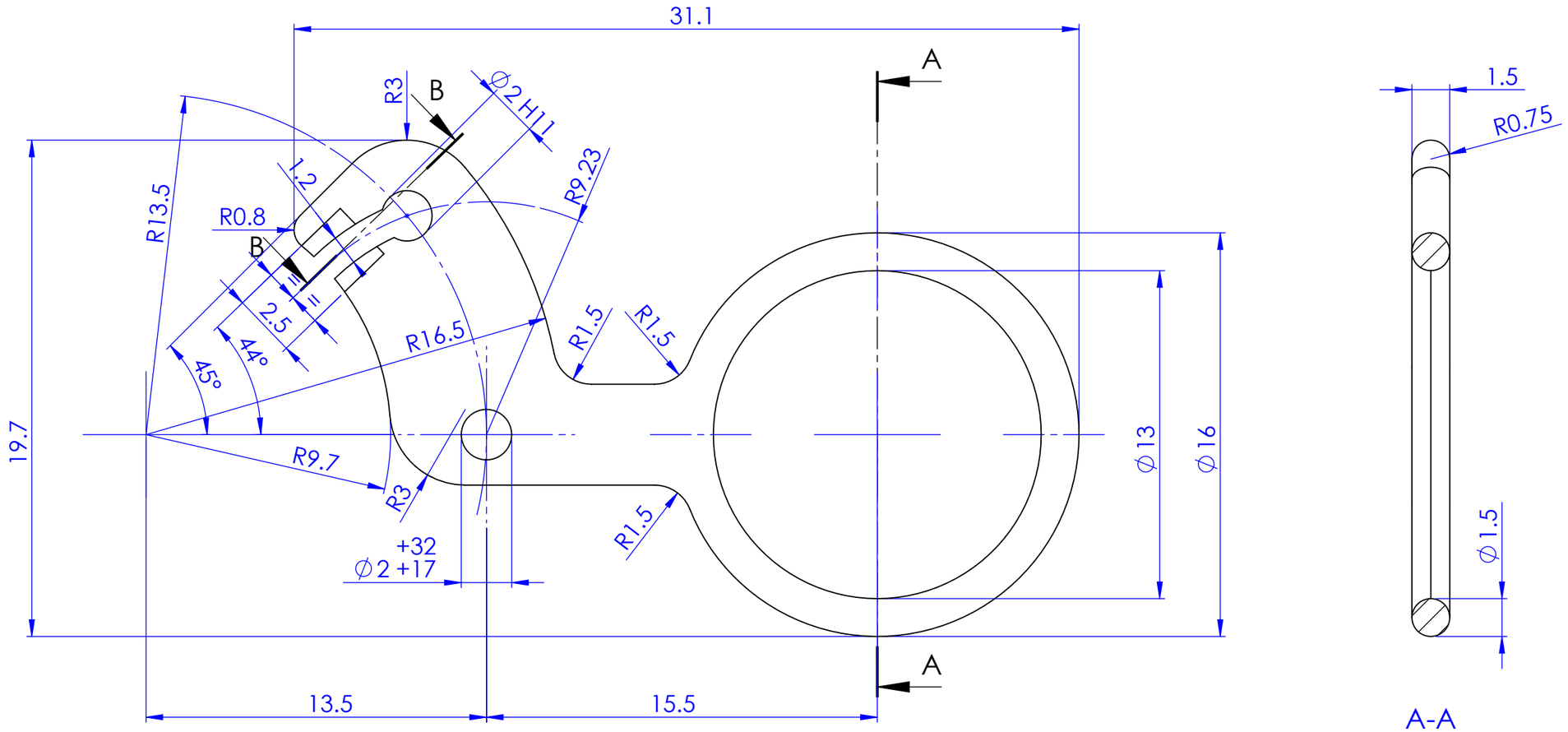

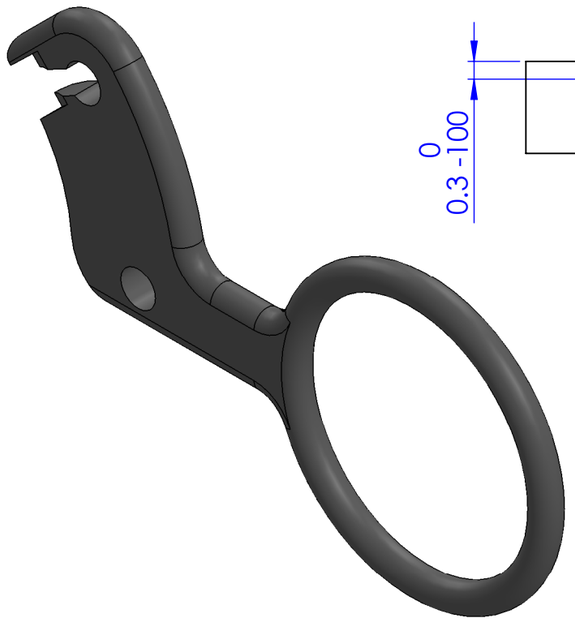

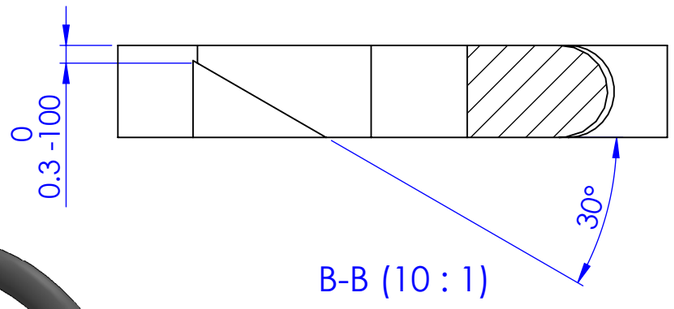

Dimension in bracket are auxiliary dimension without consideration of tolerance

Qty	1									
Type	I									
Tolerances in um = 1/1000 mm										
Max. Deviation tolerated. Dimensional: ±50 um										
Max. Deviation tolerated. Angular : ±10'						Chg.Nr.	Change		Date	Signed
* Sweeping attack max: 20 um ◇ Lateral runout max: 20 um					Material: Anticorodal B 1.5			Scale	Drawn	T.V.N
Without * Sweeping attack max: 50 um Without ◇ Lateral runout max: 50 um					Type: I Group			5:1	Checked	CODY
Prevailing Surface finish ▽▽▽					Clearing Lever				Approved	CODY
Surface treatment Matte/Black anodized										
Heat treatment					Assembly Number: 10244		ReCurta		10034-3	