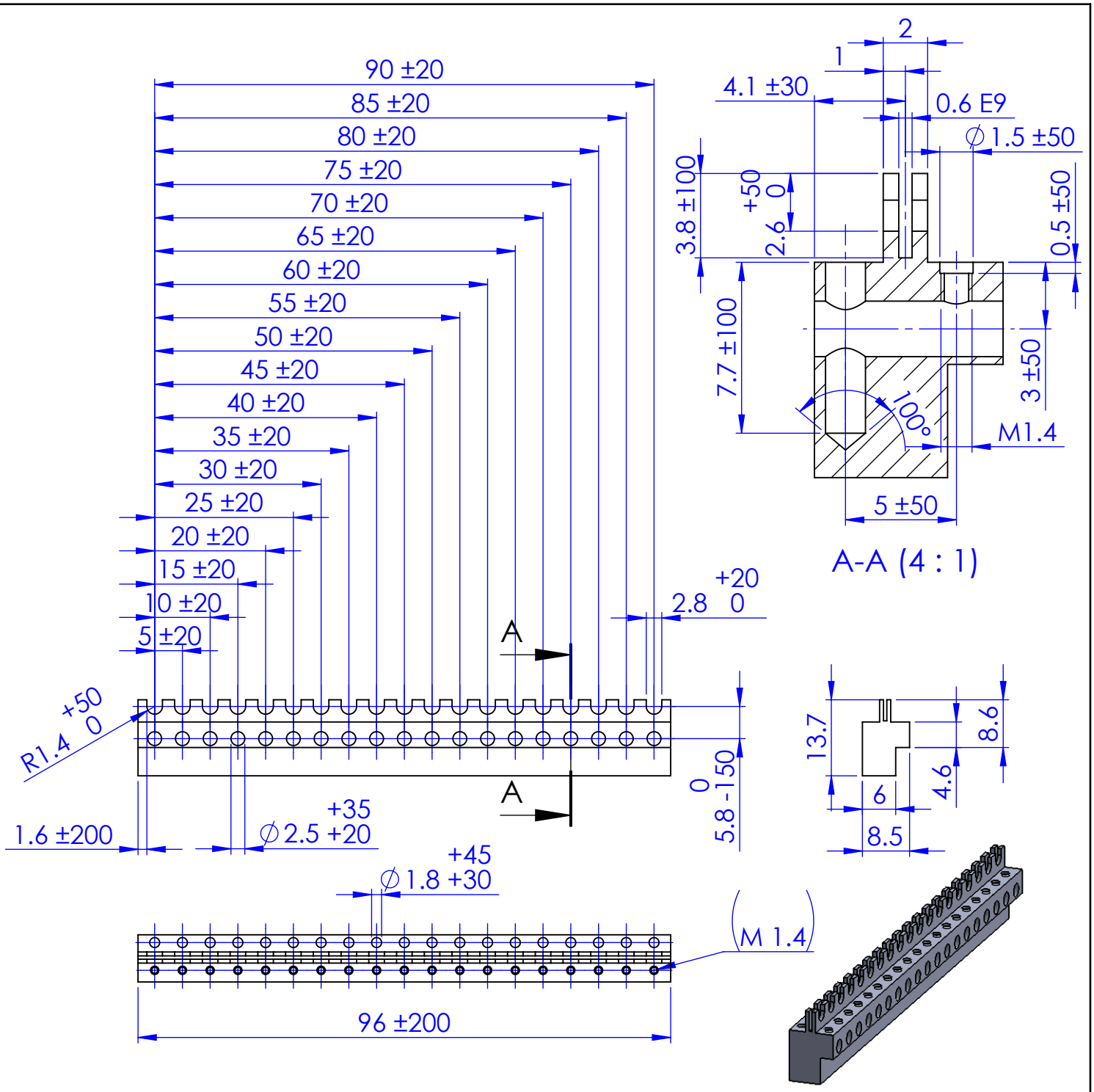

Dimension in bracket are auxiliary dimension without consideration of tolerance

Qty	-									
Type	I									
Tolerances in um = 1/1000 mm										
Max. Deviation tolerated. Dimensional: ±20 um										
Max. Deviation tolerated. Angular : -						Chg.Nr.	Change		Date	Signed
* Sweeping attack max: 20 um ◇ Lateral runout max: 20 um					Material: Anticorodal B			Scale	Drawn	T.V.N
Without * Sweeping attack max: - Without ◇Lateral runout max:					Type: I	Group		1:1	Checked	CODY
Prevailing Surface finish ▽▽					Setting Knob				Approved	CODY
Surface treatment -							ReCurta		10057	
Heat treatment					Assembly Number:-					