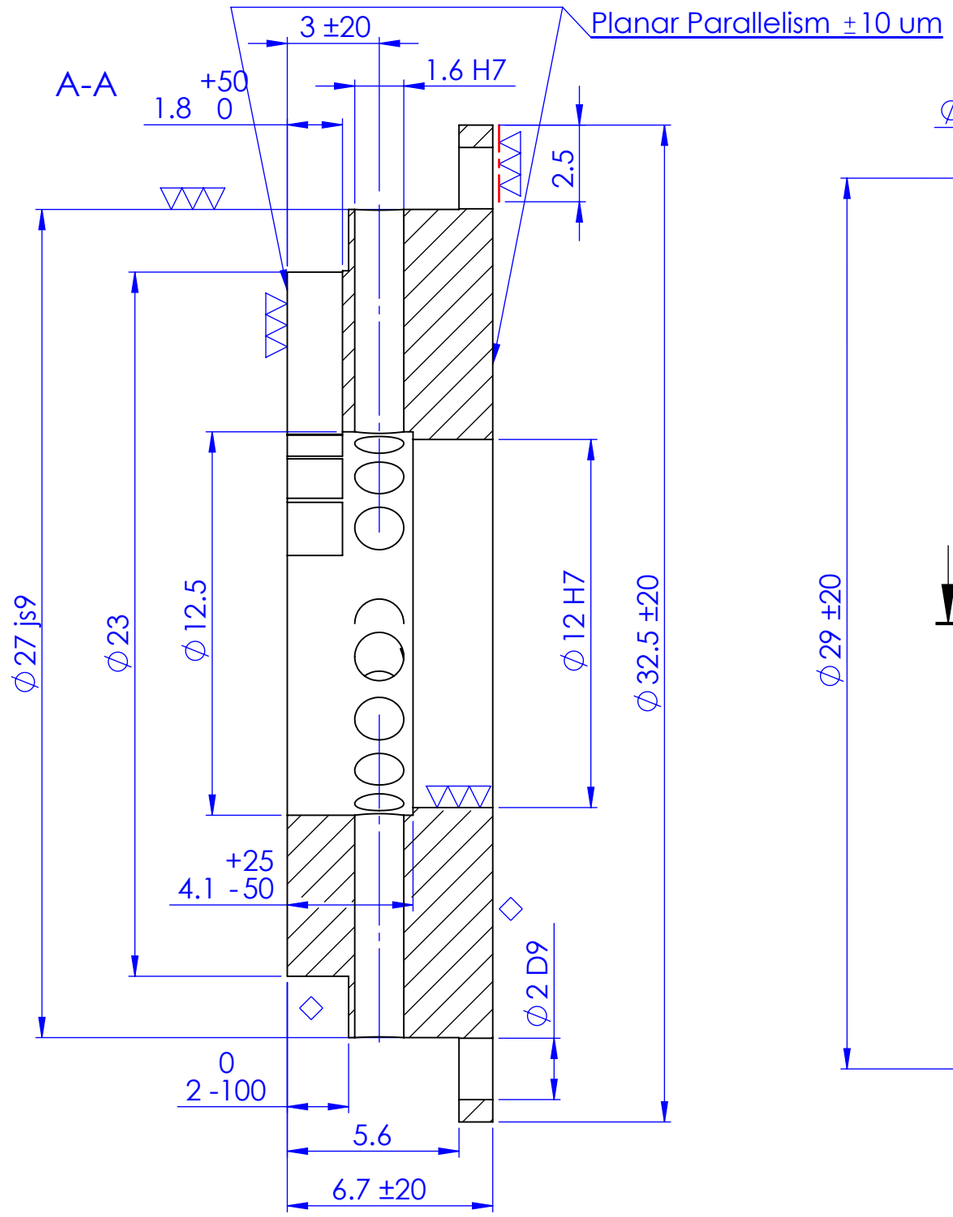

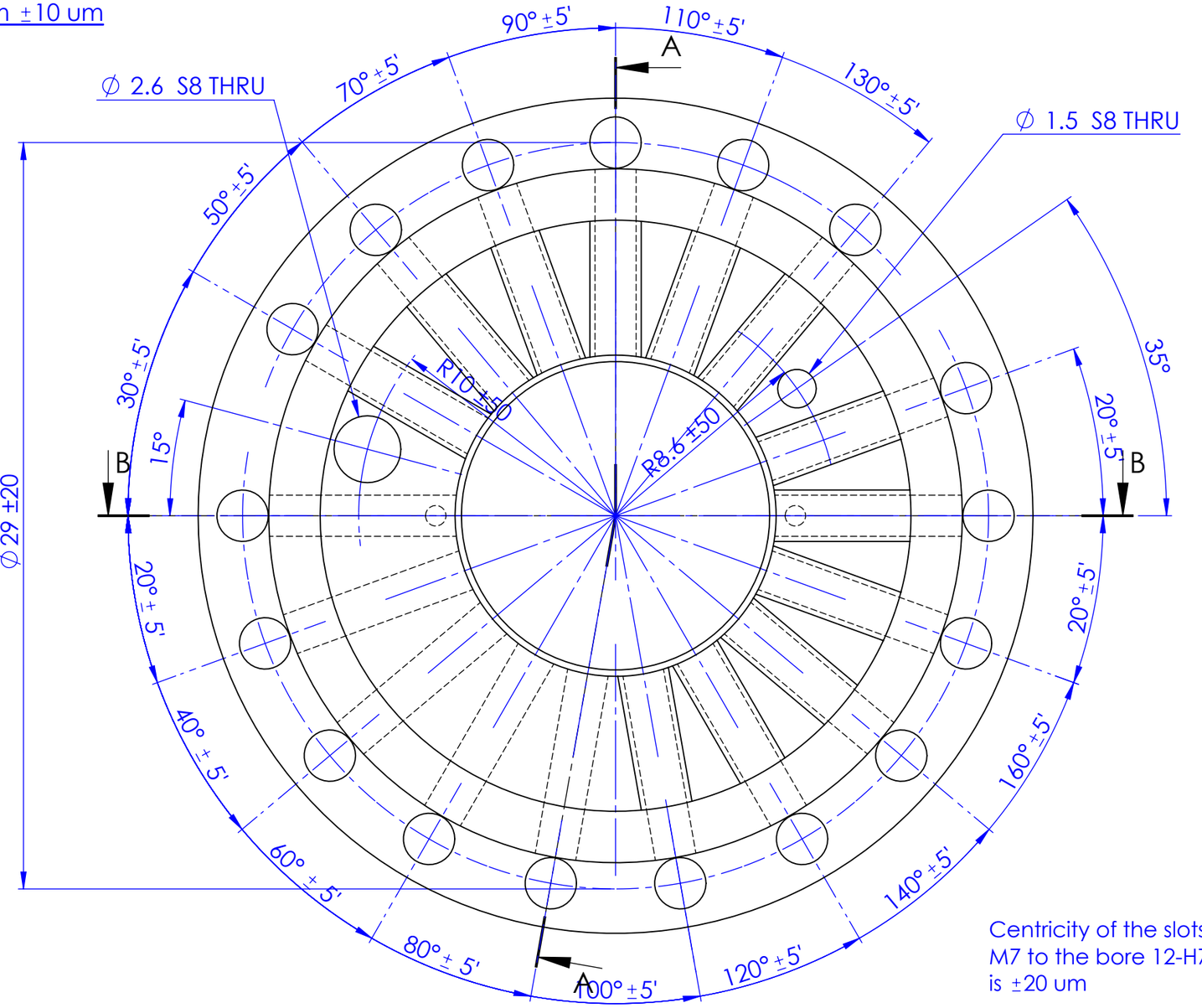

Centricity of the slots 2-M7 to the bore 12-H7 is ±20 um

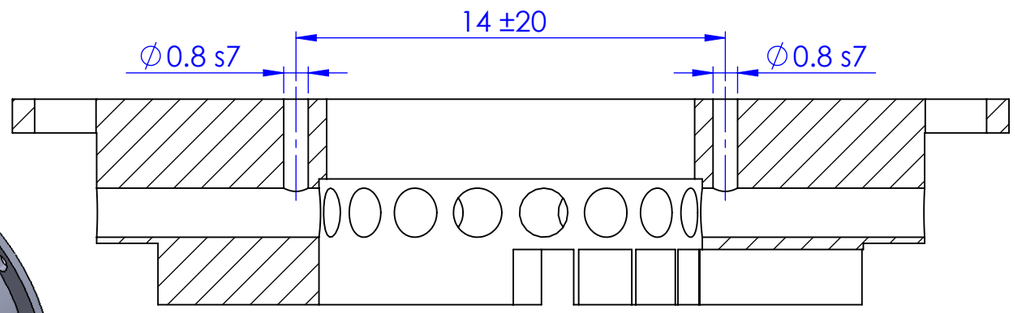

B-B

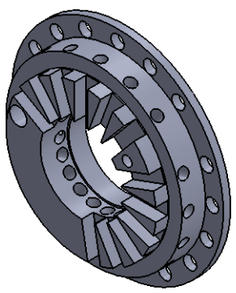

Qty	1									
Type	I									
Tolerances in um = 1/1000 mm										
Max. Deviation tolerated. Dimensional: ±100 um										
Max. Deviation tolerated. Angular : ±30'						Chg.Nr.	Change		Date	Signed
* Sweeping attack max: 20 um ◇ Lateral runout max: 20 um					Material: Anticorodal B ⌀ 33			Scale	Drawn	T.V.N
Without * Sweeping attack max: 50 um Without ◇ Lateral runout max: 50 um					Type: I Group			5:1	Checked	CODY
Prevailing Surface finish ▽▽(▽▽▽)					Carriage Casting				Approved	CODY
Surface treatment Anodized, hard										
Heat treatment -					Assembly Number: 10226		ReCurta		10040-8	