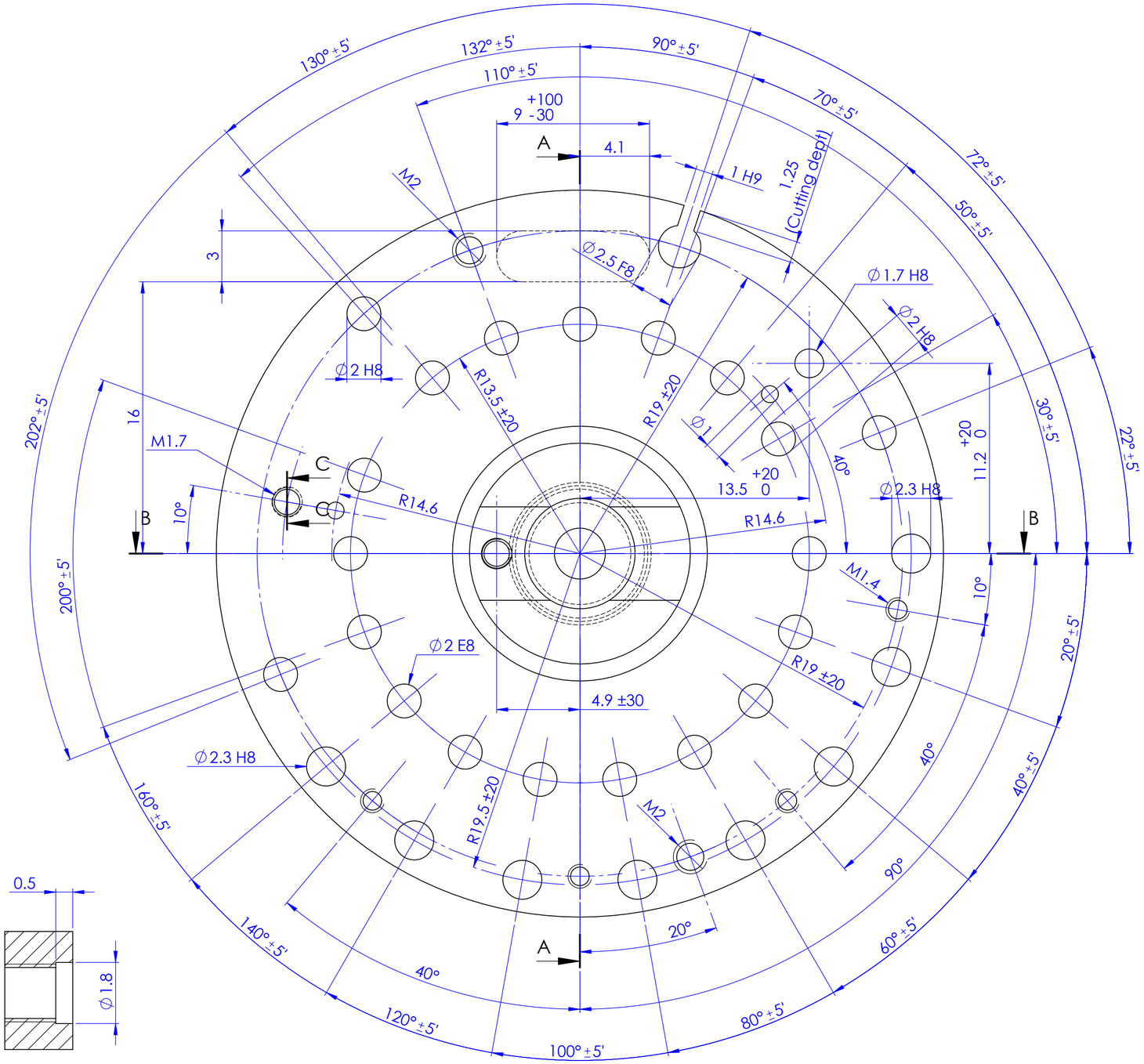

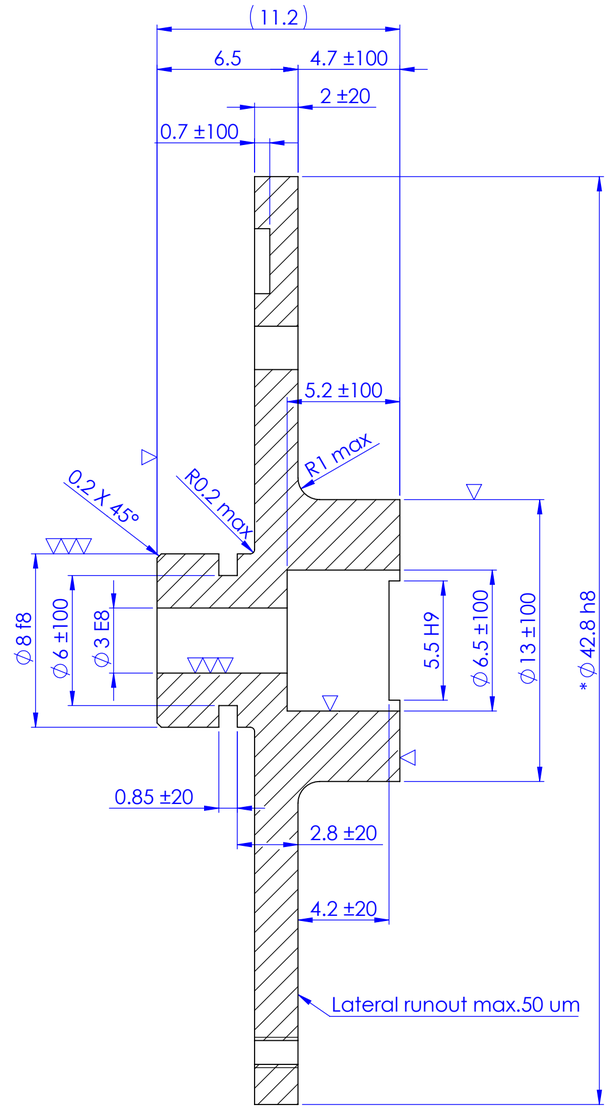

A-A

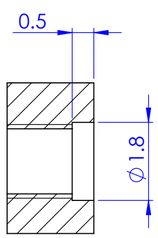

C-C (10 : 1)

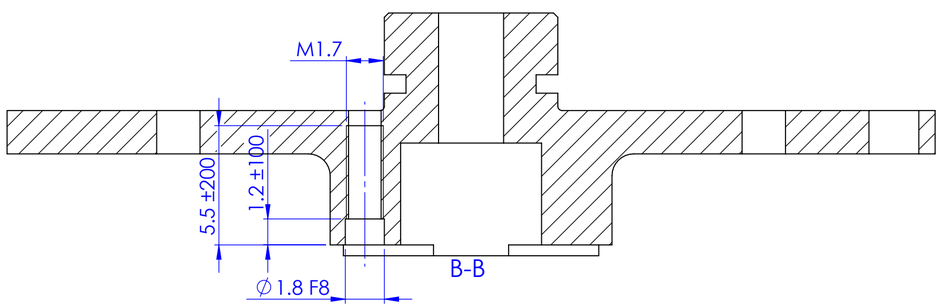

B-B

Qty	1								
Type	I								
Tolerances in um = 1/1000 mm									
Max. Deviation tolerated. Dimensional: ±50 um									
Max. Deviation tolerated. Angular : ±10'						Chg.Nr.	Change	Date	Signed
* Sweeping attack max: 20 um ◇ Lateral runout max: 20 um					Material: Anticorodal B Ø44			Scale	Drawn T.V.N
Without * Sweeping attack max: 50 um Without ◇ Lateral runout max: 50 um					Type: I Group			5:1	Checked CODY
Prevailing Surface finish ▽▽(▽▽▽)					Lower Main Casting				Approved CODY
Surface treatment Anodized/ Hard									
Heat treatment					Assembly Number: 10231		ReCurta		10077-13