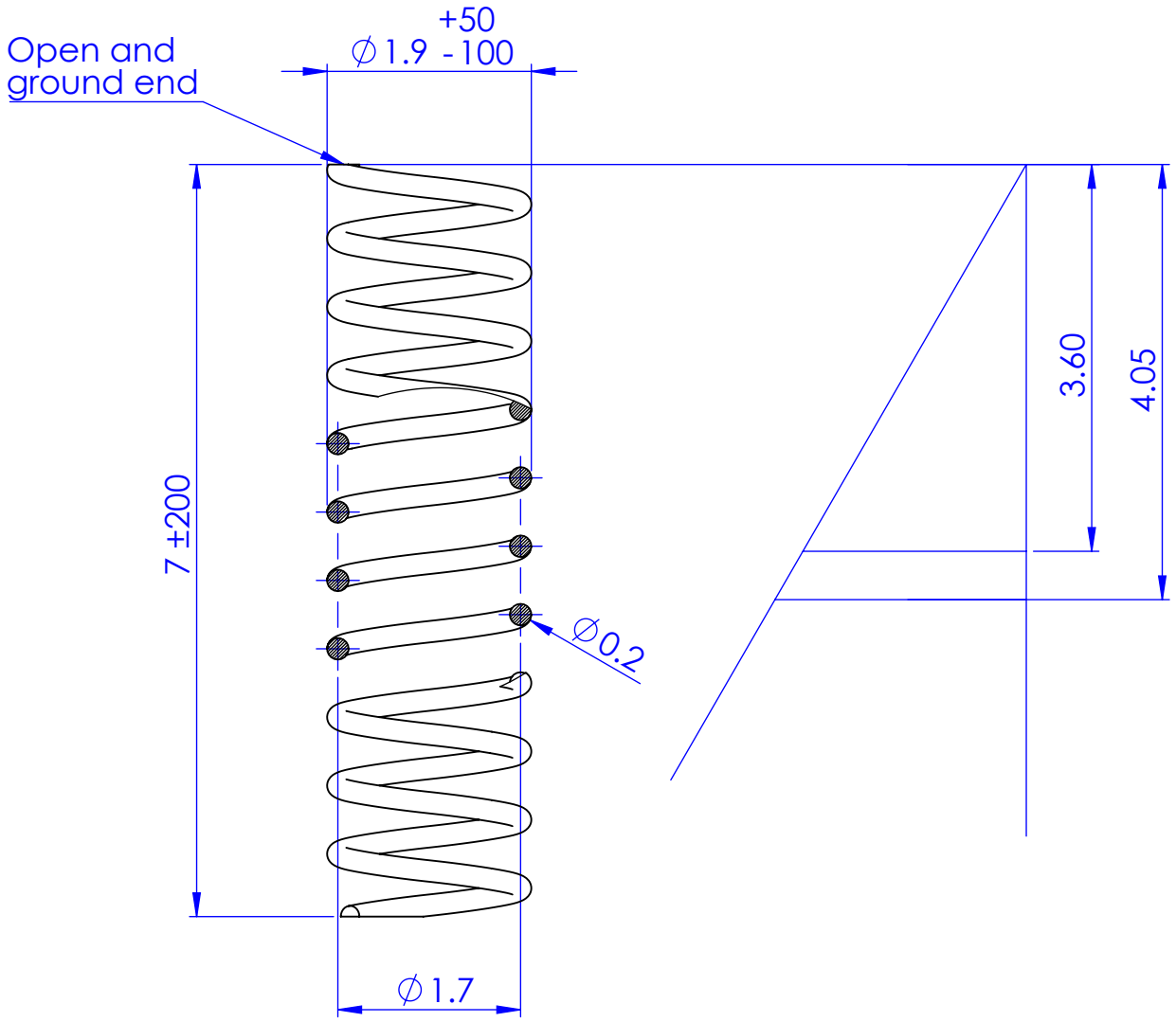

Kd = 8000 kg/cm^2

Active Turn= 11
End Turn = 2
Total Turn = 13
Deflection/Turn = 0.44

Qty	1										
Type	I										
Tolerances in um = 1/1000 mm											
Max. Deviation tolerated. Dimensional: ±50 um											
Max. Deviation tolerated. Angular :							Chg.Nr.	Change		Date	Signed
* Sweeping attack max: 20 um ◇ Lateral runout max: 20 um					Material: Nichtr,Fed.St.Dr ∅ 0.2				Scale	Drawn	T.V.N
Without * Sweeping attack max: Without ◇Lateral runout max:					Type: I	Group			15:1	Checked	CODY
Prevailing Surface finish					Clearing Plate Ring					Approved	CODY
Surface treatment -											
Heat treatment					Assembly Number: 10210		ReCurta			10086-4a	