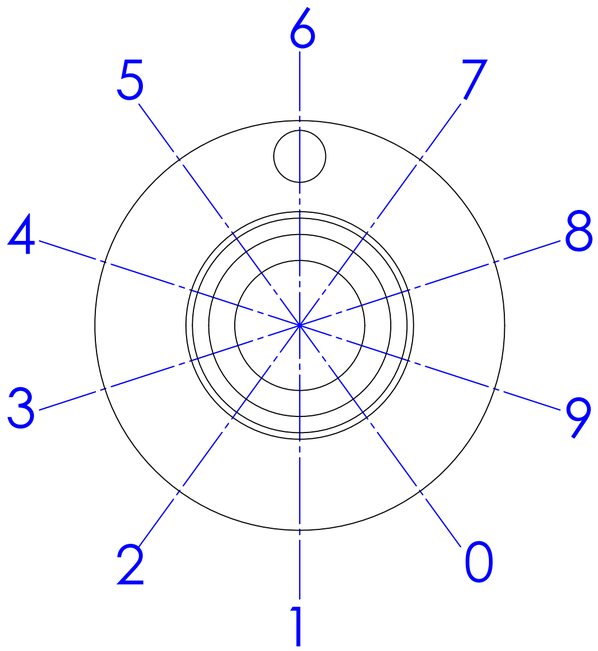

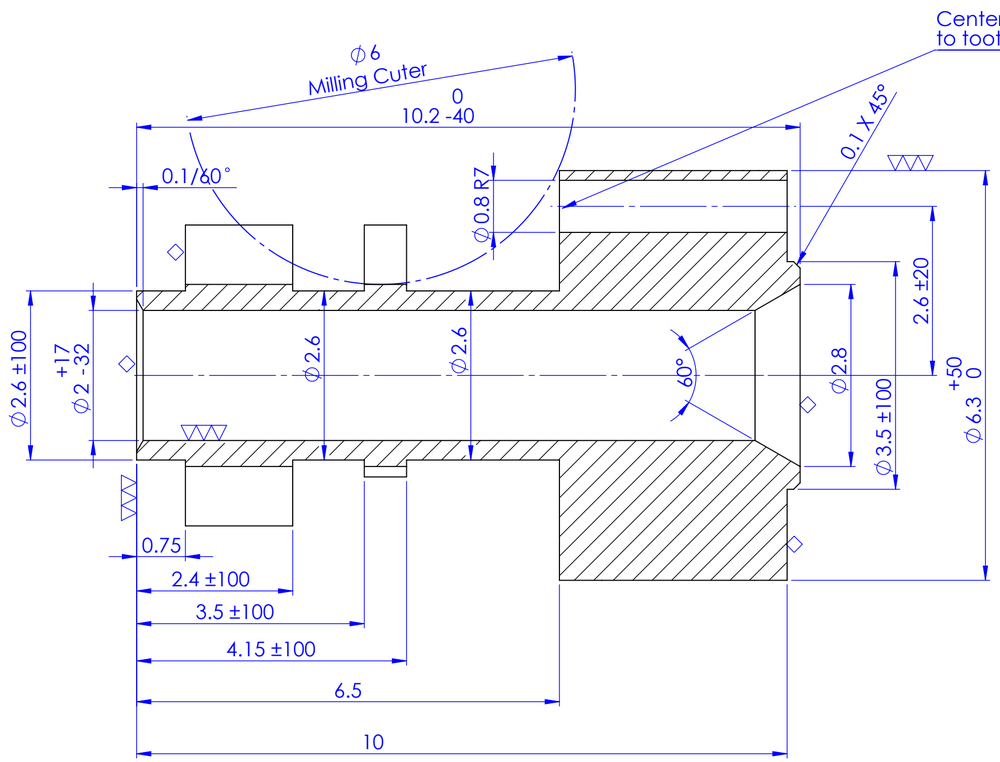

Centering of the drilling to tooth flanks ±20um

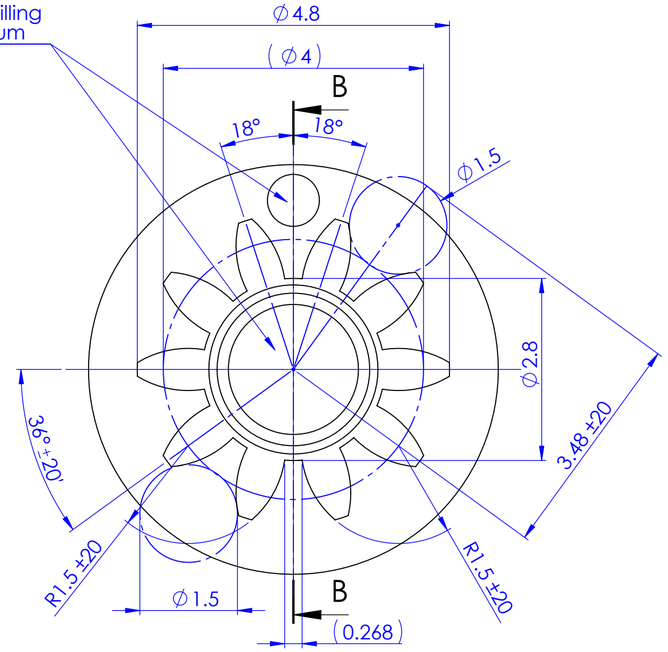

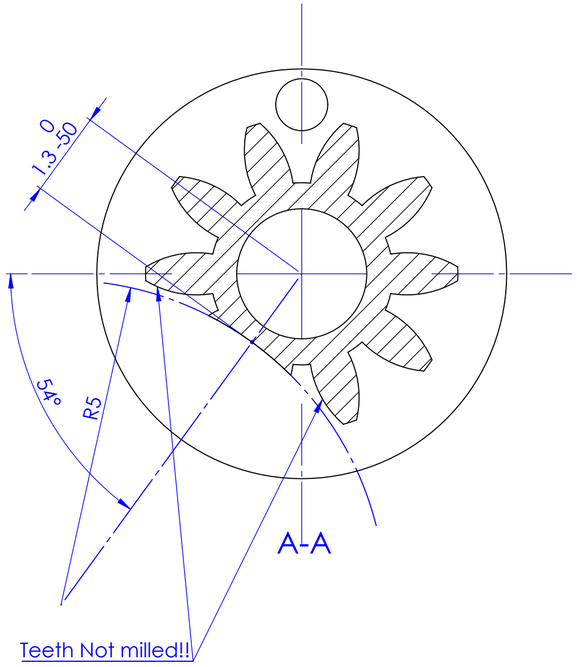

Teeth Not milled!!

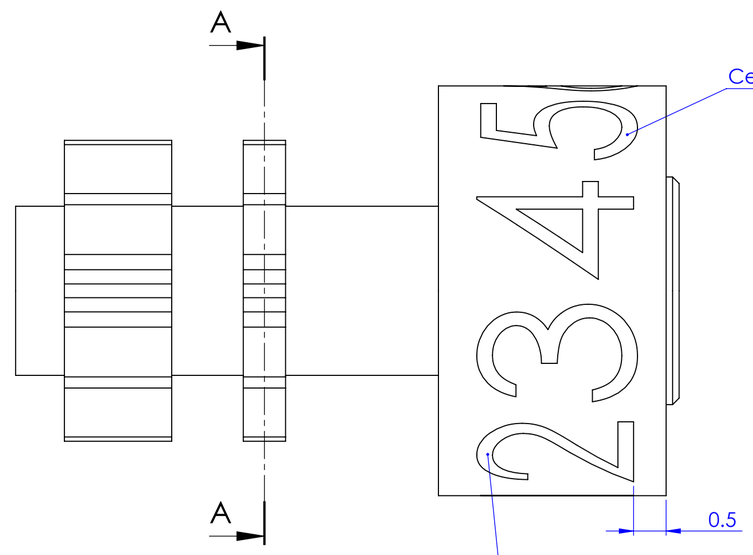

Center of digits to tooth flanks ±30 um

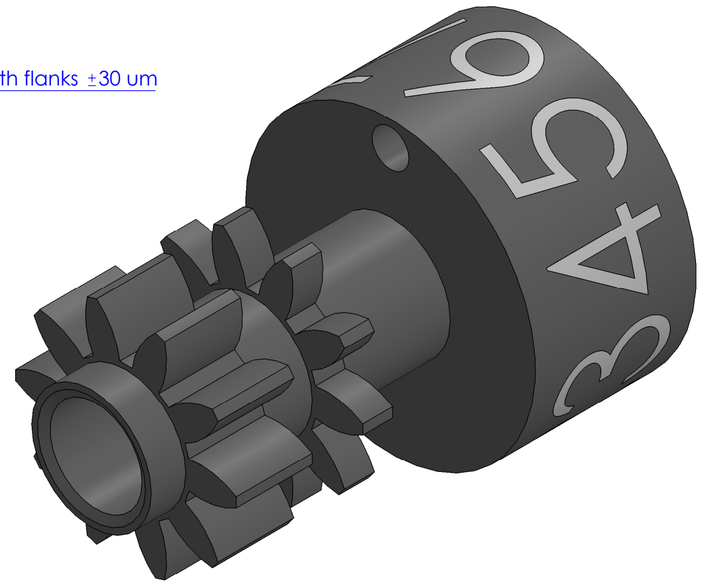

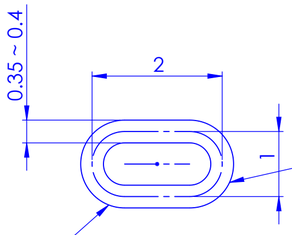

Digit Size

Numerals engraved white

Qty	4								
Type	I								
Tolerances in um = 1/1000 mm									
Max. Deviation tolerated. Dimensional: ±50 um									
Max. Deviation tolerated. Angular : -						Chg.Nr.	Change	Date	Signed
* Sweeping attack max: 20 um ◇ Lateral runout max: 20 um					Material: Spanal 320 Ø6.5			Scale	Drawn T.V.N
Without * Sweeping attack max: 50 um Without ◇ Lateral runout max: 50 um					Type: I Group			15:1	Checked CODY
Prevailing Surface finish ▽▽(▽▽▽)					Numeral Dial 1				Approved CODY
Surface treatment Black anodized, hard, engravable									
Heat treatment					Assembly Number: 10203		ReCurta		10043-10a