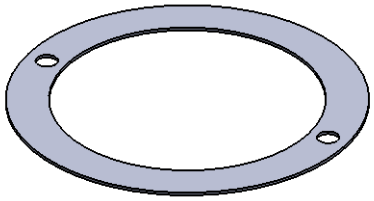

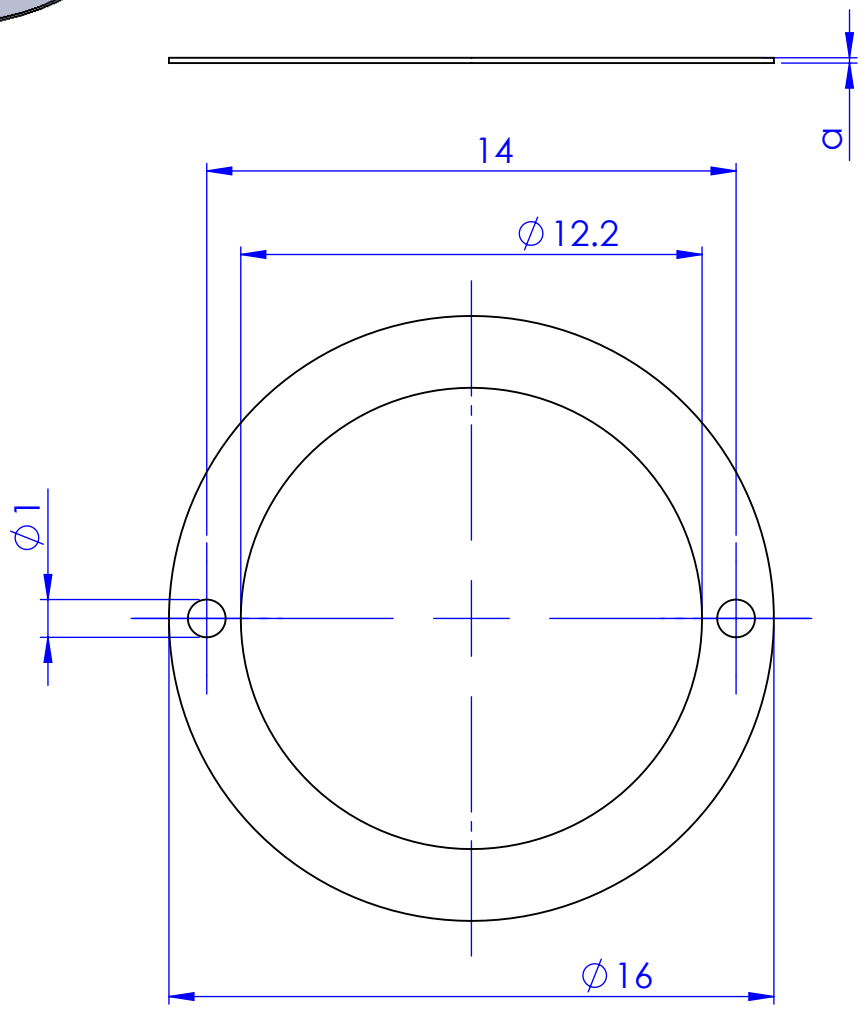

Pos	Thickness a
5	0.14
4	0.12
3	0.1
2	0.08
1	0.06

Qty	1									
Type	I									
Tolerances in um = 1/1000 mm										
Max. Deviation tolerated. Dimensional: ±100 um										
Max. Deviation tolerated. Angular : -							Chg.Nr.	Change	Date	Signed
* Sweeping attack max: 20 um ◇ Lateral runout max: 20 um					Material: Ms 58 Pb			Scale	Drawn	T.V.N
Without * Sweeping attack max: Without ◇ Lateral runout max:					Type: I	Group		5:1	Checked	CODY
Prevailing Surface finish ▽▽					Shim Washer				Approved	CODY
Surface treatment -										
Heat treatment -					Assembly Number: 10210		ReCurta		10153-1	