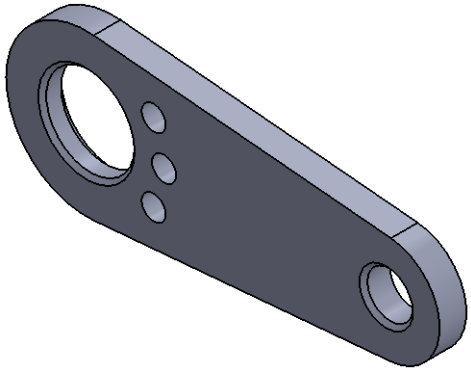

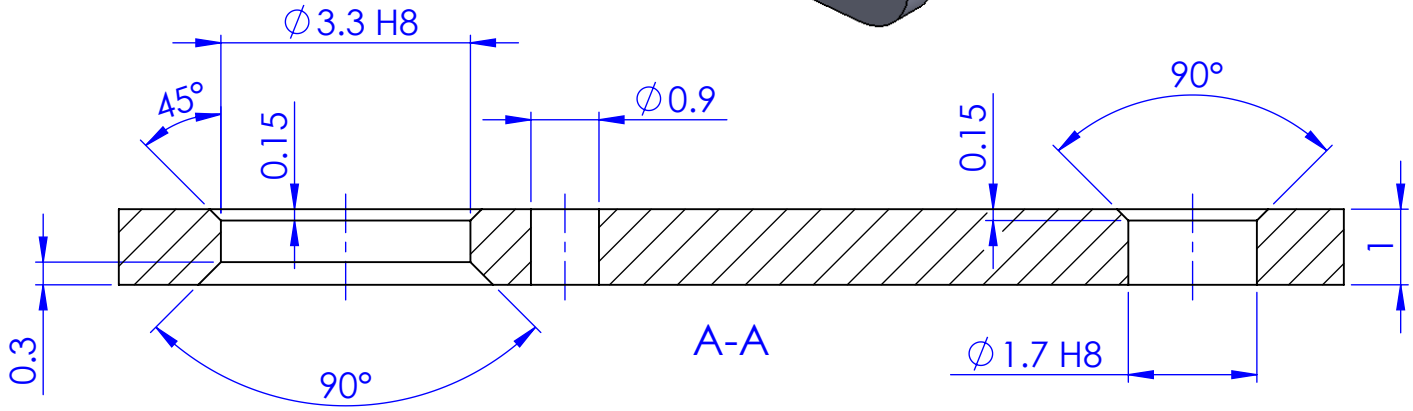

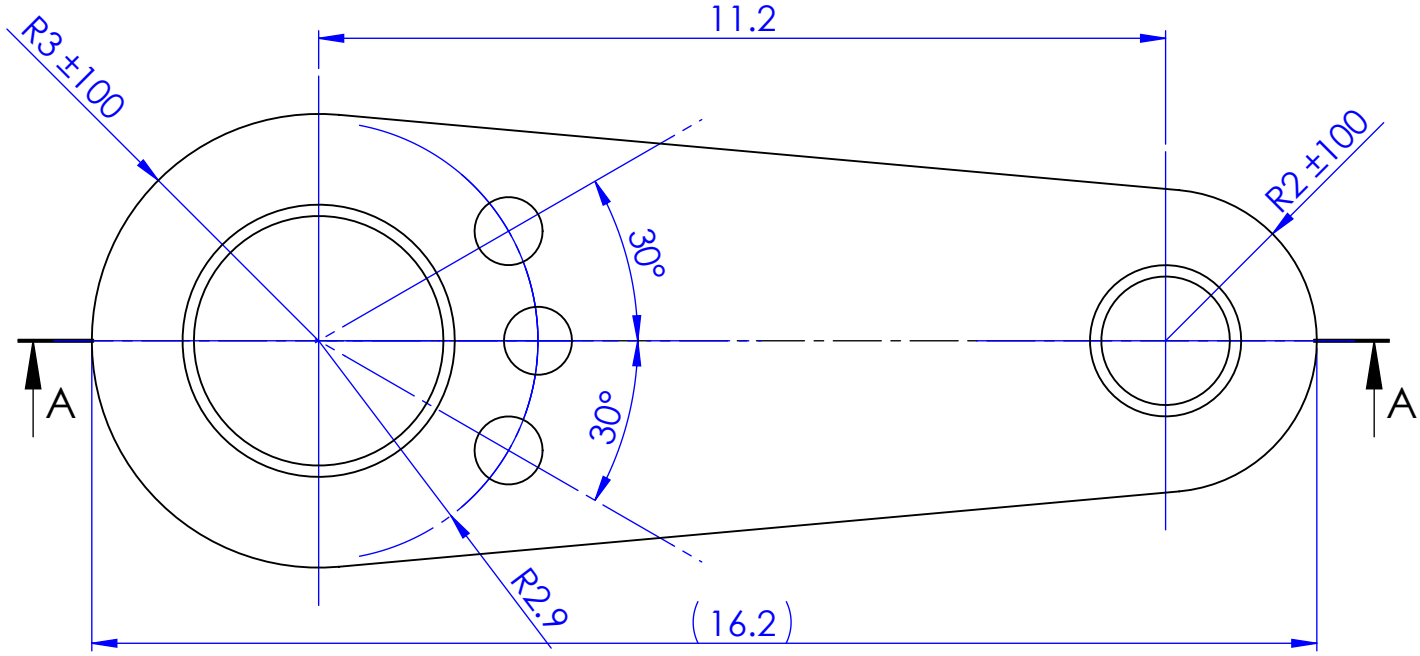

Qty	1									
Type	I									
Tolerances in um = 1/1000 mm										
Max. Deviation tolerated. Dimensional: ±50 um										
Max. Deviation tolerated. Angular : -							Chg.Nr.	Change	Date	Signed
* Sweeping attack max: 20 um ◇ Lateral runout max: 20 um					Material: Anticorodalblech B 1 mm			Scale	Drawn	T.V.N
Without * Sweeping attack max: Without ◇Lateral runout max:					Type: I	Group		10:1	Checked	CODY
Prevailing Surface finish ▽▽					Zero Positioning Lever				Approved	CODY
Surface treatment -										
Heat treatment -					Assembly Number: 10225/2510		ReCurta		10114-4	