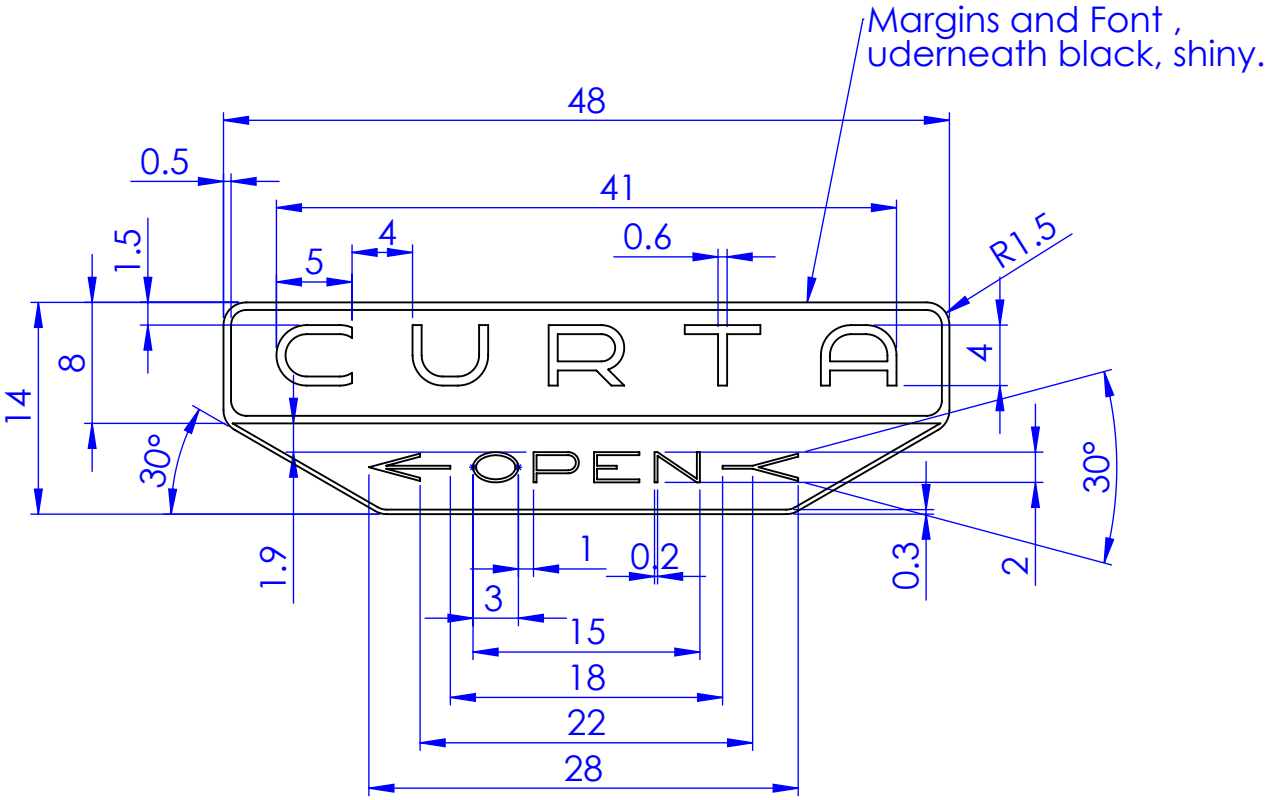

Dimension in bracket are auxiliary dimension without consideration of tolerance

Qty	1									
Type	I									
Tolerances in um = 1/1000 mm										
Max. Deviation tolerated. Dimensional: -										
Max. Deviation tolerated. Angular : -							Chg.Nr.	Change	Date	Signed
* Sweeping attack max: 20 um ◇ Lateral runout max: 20 um					Material: Metal-CAL-Klebeschild			Scale	Drawn	T.V.N
Without * Sweeping attack max:50 um Without ◇ Lateral runout max: 50 um					Type: I	Group		2:1	Checked	CODY
Prevailing Surface finish					Decorative Plate For Capsule				Approved	CODY
Surface treatment Anodized, Lettered										
Heat treatment -					Assembly Number: 10228/2550		ReCurta		10156	