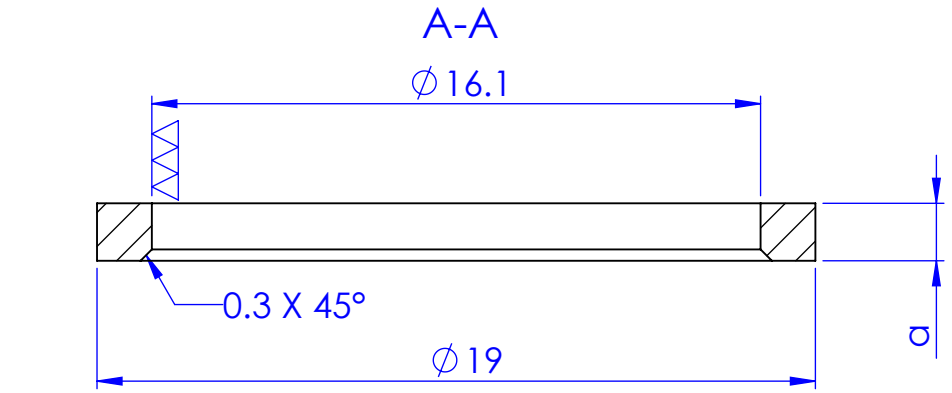

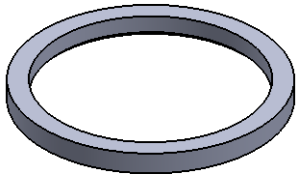

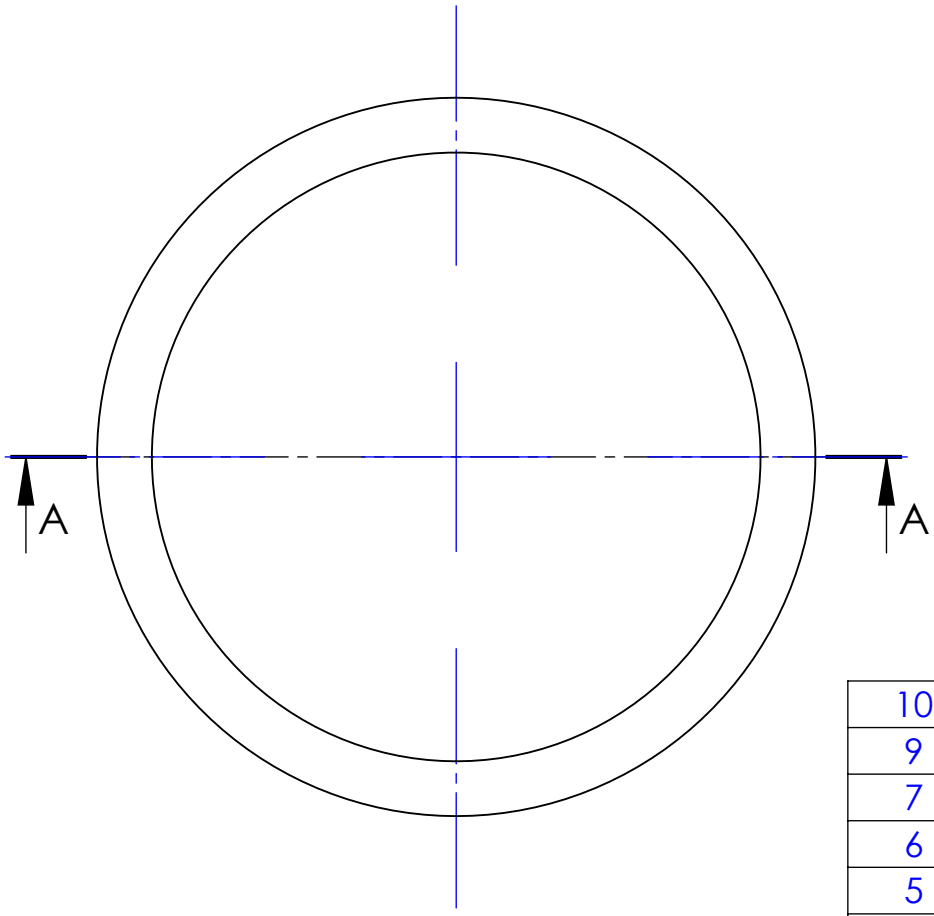

10	Above 1.50-1.52
9	1.48 - 1.50
7	1.44 - 1.46
6	1.42 - 1.44
5	1.40 - 1.42
4	1.38 - 1.40
3	1.34 - 1.36
2	Above 1.34 - 1.36
1	Between 1.32 - 1.34
Pos	Dimension of a

Qty	1									
Type	I									
Tolerances in um = 1/1000 mm										
Max. Deviation tolerated. Dimensional: ±50 um										
Max. Deviation tolerated. Angular : -						Chg.Nr.	Change		Date	Signed
* Sweeping attack max: ◇ Lateral runout max:					Material: Anticorodalrohl B 20/2.5			Scale	Drawn	T.V.N
Without * Sweeping attack max: Without ◇ Lateral runout max:					Type: I	Group		5:1	Checked	CODY
Prevailing Surface finish ▽▽▽(▽▽)					Clearing Plate Distance Ring				Approved	CODY
Surface treatment Black Anodised							ReCurta		10099-2	
Heat treatment -					Assembly Number: 10210					