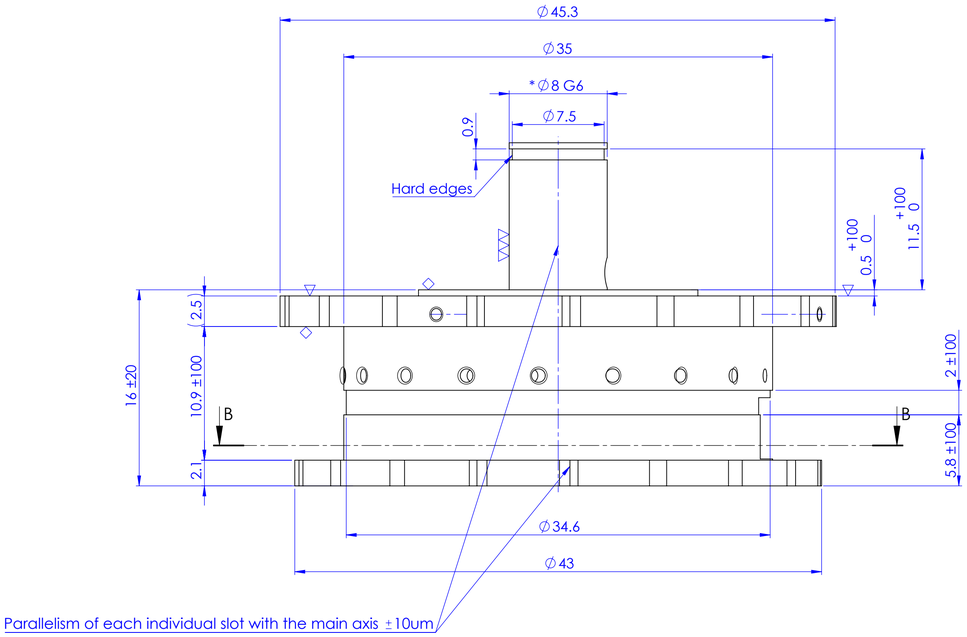

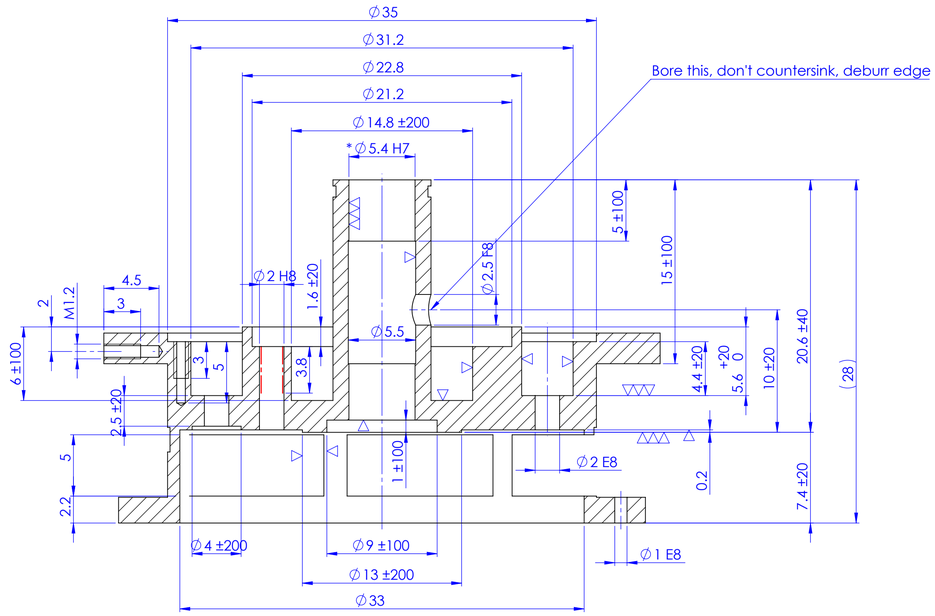

A-A

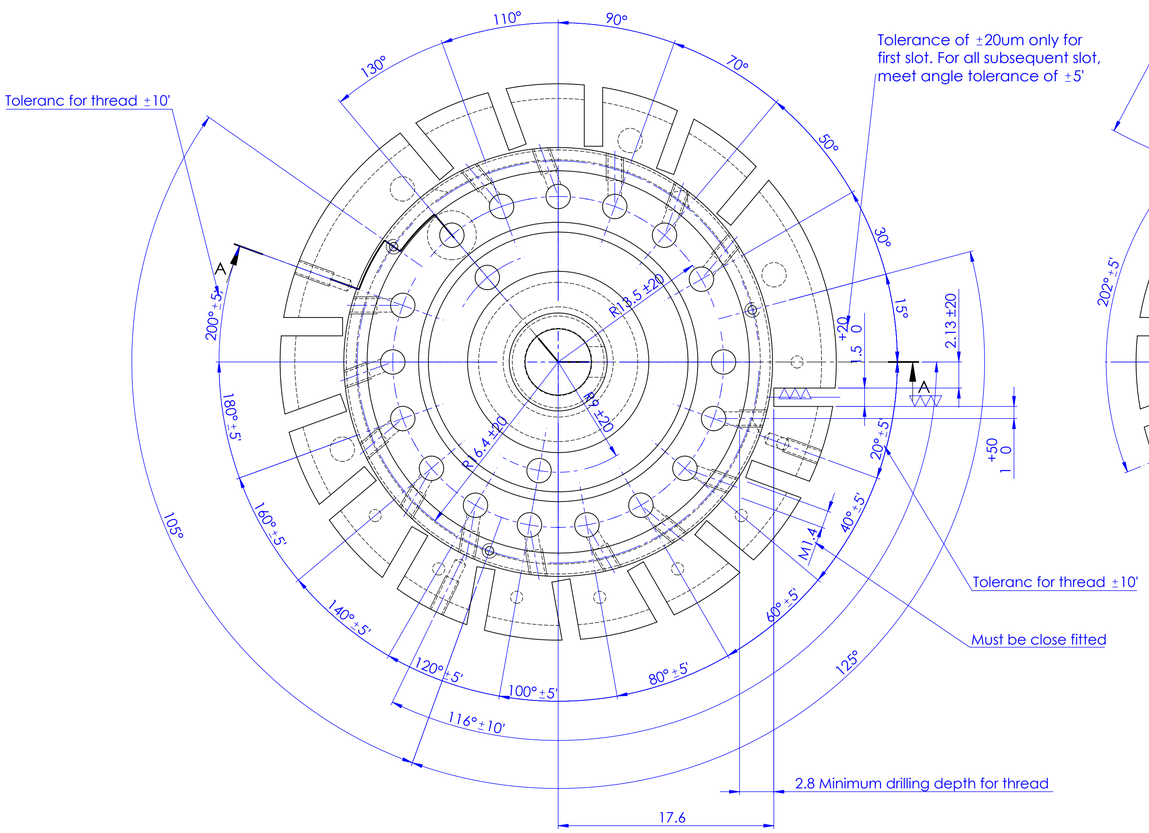

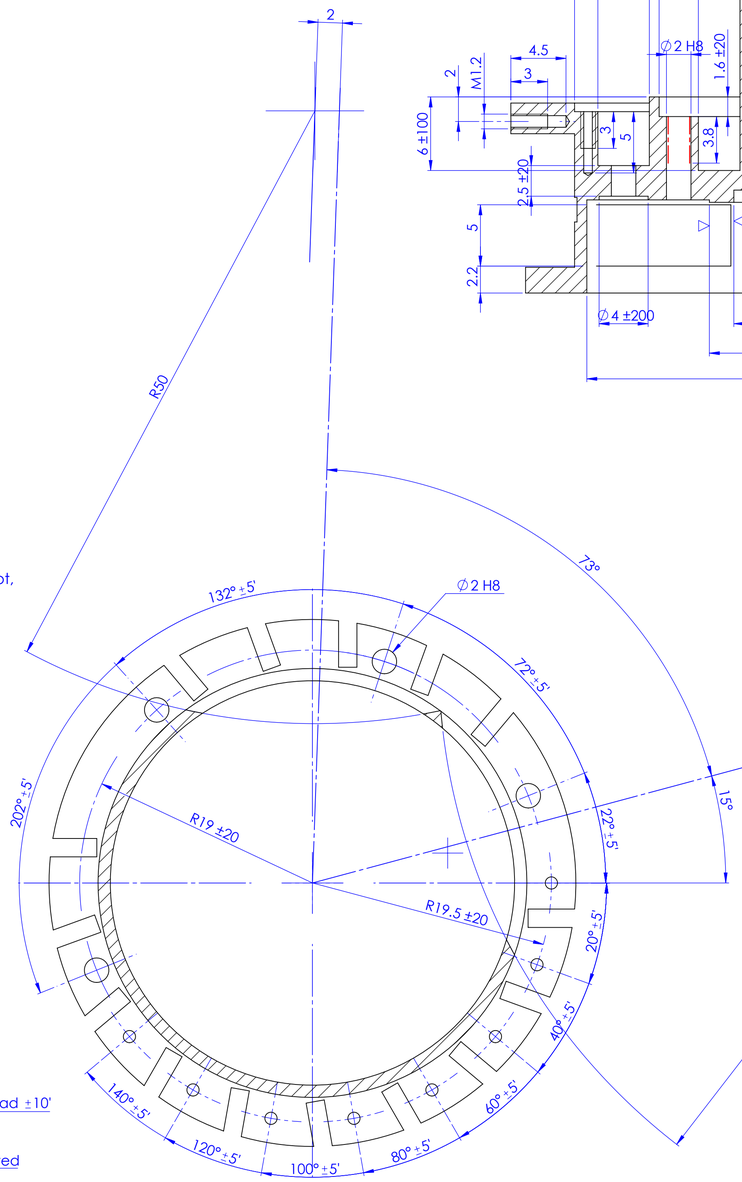

B-B

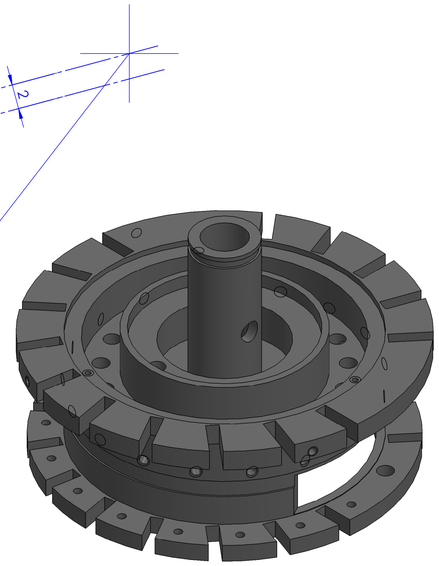

Dimension in bracket are auxiliary dimension without consideration of tolerance

Qty	1								
Type	I								
Tolerances in um = 1/1000 mm									
Max. Deviation tolerated. Dimensional: ±50 um									
Max. Deviation tolerated. Angular : ±1°						Chg.Nr.	Change	Date	Signed
* Sweeping attack max: 20 um					Material: Anticorodal B (Pressling)		Scale	Drawn	T.V.N
◇ Lateral runout max: 20 um					Type: I Group		4:1	Checked	CODY
Without * Sweeping attack max: 50 um									
Without ◇ Lateral runout max: 50 um					Upper Main Casting			Approved	CODY
Prevailing Surface finish ▽▽(▽▽▽▽▽)									
Surface treatment Anodized/hard						ReCurta	10011-15		
Heat treatment					Assembly Number: 10248				