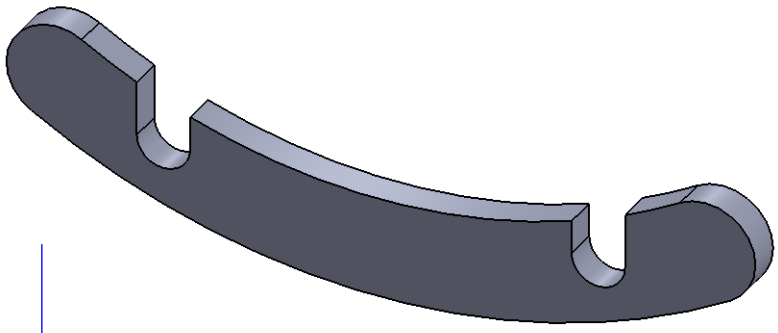

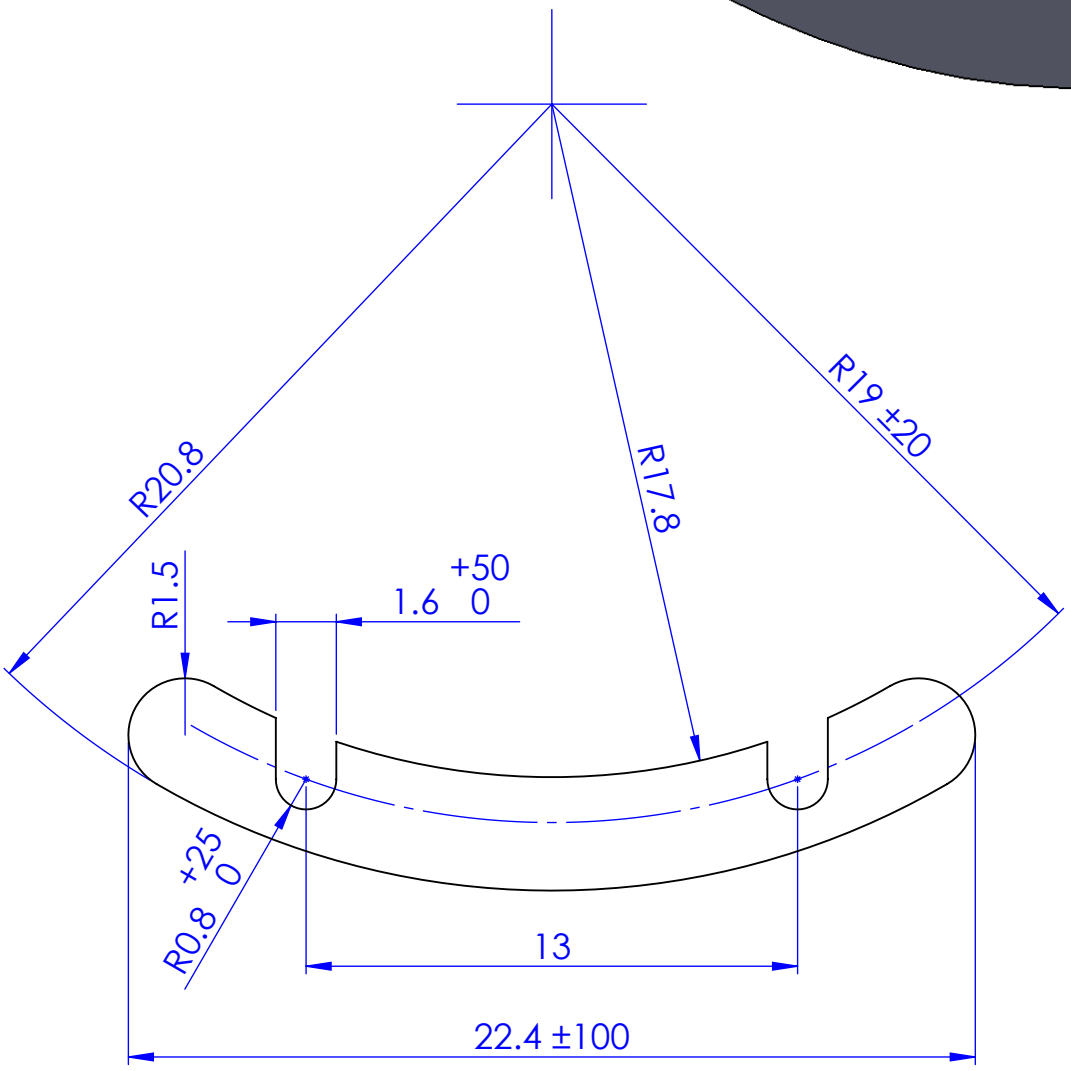


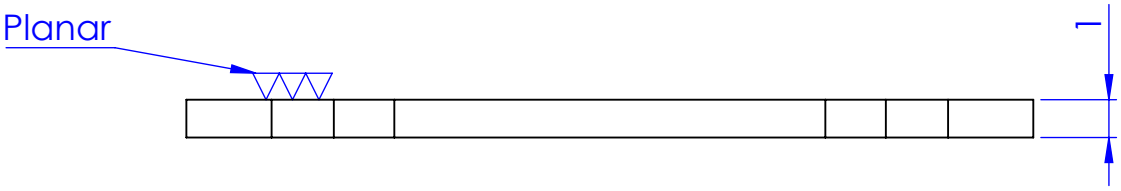


| | | | | | | | | | | |
|---|---|---|---|---|---|---|---|---|---|---|
| Qty | 2 | | | | | | | | | |
| Type | I | | | | | | | | | |
| Tolerances in um = 1/1000 mm | | | | | | | | | | |
| Max. Deviation tolerated. Dimensional: ± 50 um | | | | | | | | | | |
| Max. Deviation tolerated. Angular : - | | | | | | | Chg.Nr. | Change | Date | Signed |
| * Sweeping attack max: - ◇ Lateral runout max: - | | | | | Material: Anticorodalblech B 1 mm | | | Scale | Drawn | T.V.N |
| Without * Sweeping attack max: - Without ◇ Lateral runout max: - | | | | | Type: I | Group | | 5:1 | Checked | CODY |
| Prevailing Surface finish ▽▽ (▽▽▽) | | | | | Setting Shaft Plates | | | | Approved | CODY |
| Surface treatment - | | | | | | | | | | |
| Heat treatment - | | | | | Assembly Number: 10234 | | ReCurta | | 10136-2 | |