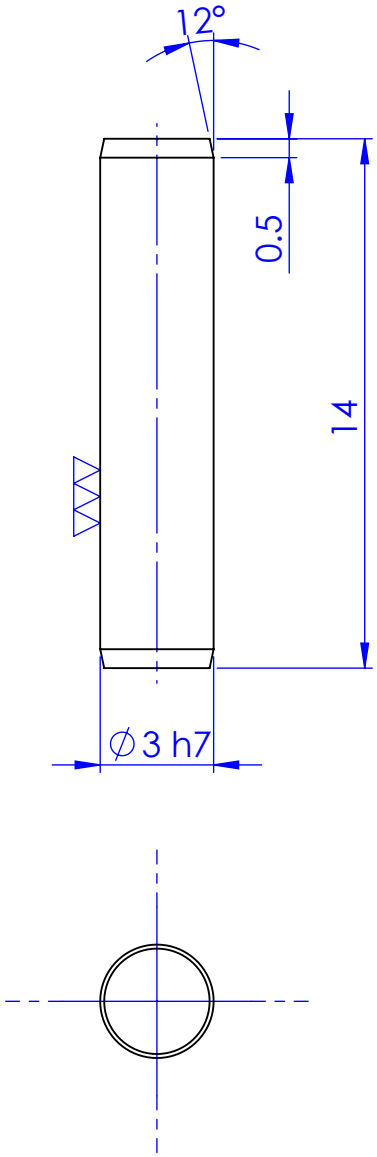

Qty	1									
Type	I									
Tolerances in um = 1/1000 mm										
Max. Deviation tolerated. Dimensional: ±100 um										
Max. Deviation tolerated. Angular :							Chg.Nr.	Change	Date	Signed
* Sweeping attack max: ◇ Lateral runout max:					Material: nichstrost. Stahl RRMD; ∅ 7-h7 gesschliffen			Scale	Drawn	T.V.N
Without * Sweeping attack max: Without ◇ Lateral runout max:					Type: I	Group		5:1	Checked	CODY
Prevailing Surface finish ▽▽(▽▽▽)					Ten Bell Locking Pin				Approved	CODY
Surface treatment										
Heat treatment					Assembly Number: 10213		ReCurta		10072-4	