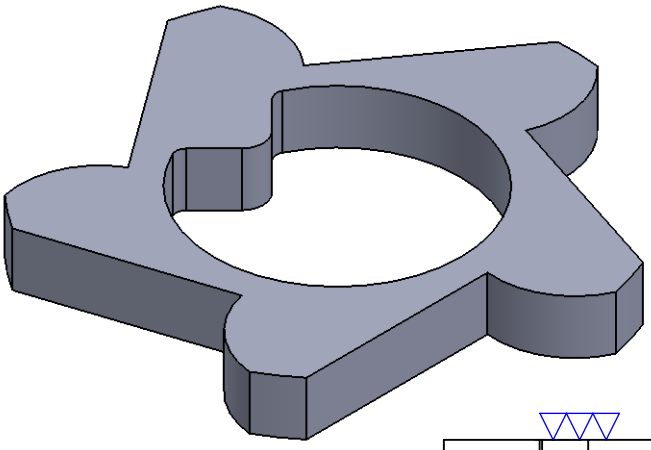

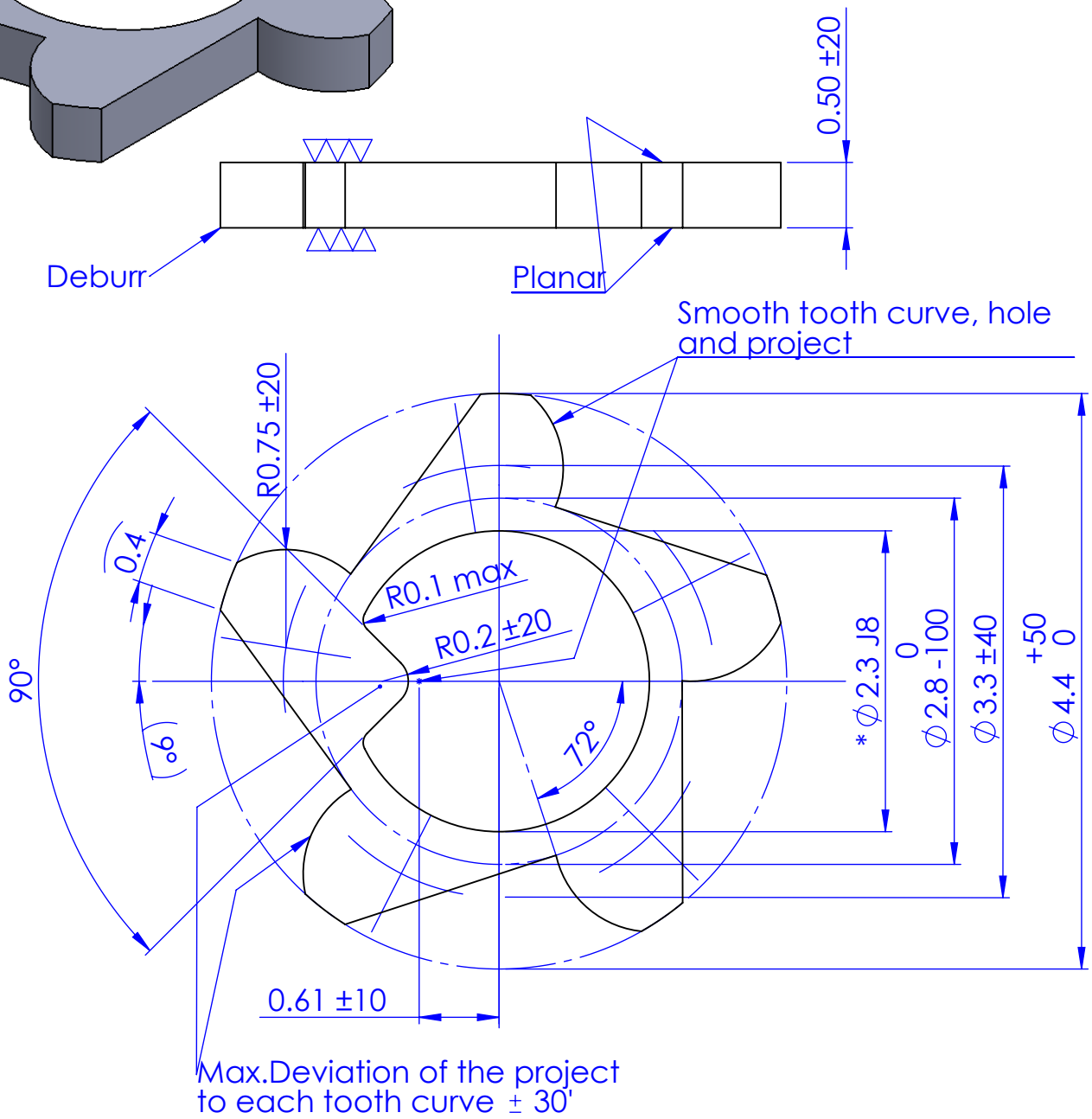

Qty	20									
Type	I									
Tolerances in um = 1/1000 mm										
Max. Deviation tolerated. Dimensional: ±50 um										
Max. Deviation tolerated. Angular : ±20'						Chg.Nr.	Change		Date	Signed
* Sweeping attack max: 20 um ◇ Lateral runout max: 20 um					Material: Phosphorbronzeband Brin 220 , 0.5 ±20			Scale	Drawn	T.V.N
Without * Sweeping attack max: 50 um Without ◇ Lateral runout max: 50 um					Type: I	Group		20:1	Checked	CODY
Prevailing Surface finish ▽▽ (▽▽▽)					Counter Gear I(aka 410347)				Approved	CODY
Surface treatment -										
Heat treatment					Assembly Number: 10217/18/19/30 2519		ReCurta		10038-4	