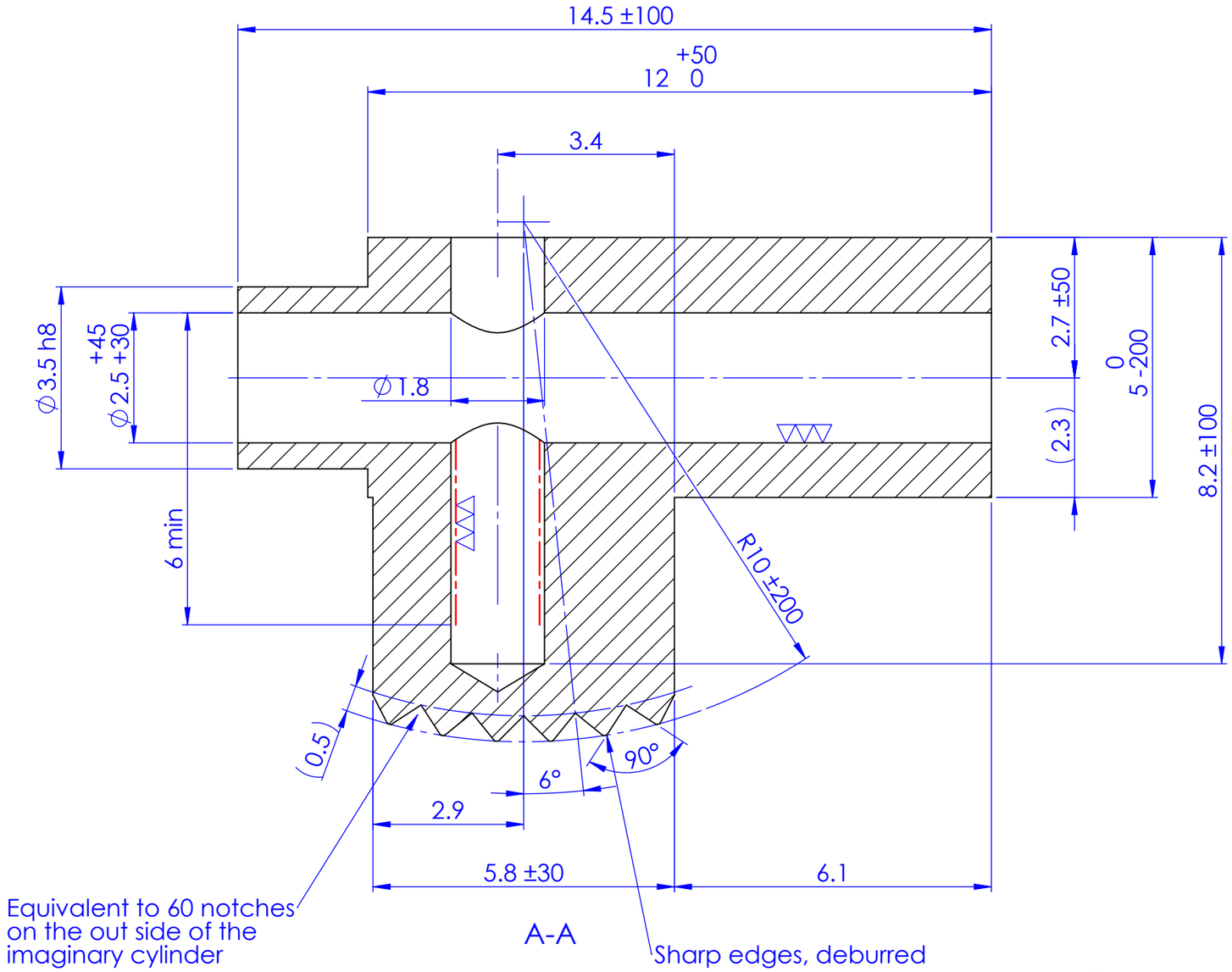

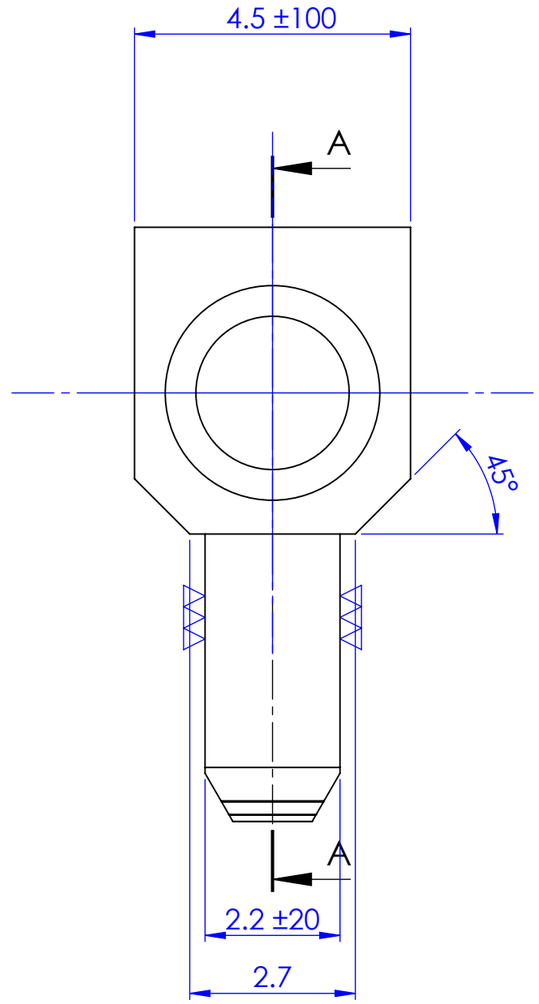

Dimension in bracket are auxiliary dimension without consideration of tolerance

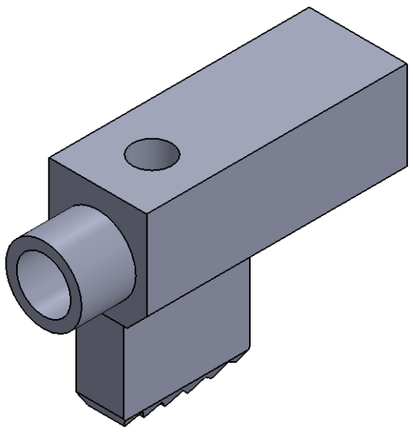

Qty	1									
Type	I									
Tolerances in um = 1/1000 mm										
Max. Deviation tolerated. Dimensional: ±50 um										
Max. Deviation tolerated. Angular : ±2°						Chg.Nr.	Change		Date	Signed
* Sweeping attack max: 20 um ◇ Lateral runout max: 20 um					Material: Anticorodal B(Prof.21) 15 x 10			Scale	Drawn	T.V.N
Without * Sweeping attack max: 50 um Without ◇ Lateral runout max: -					Type: I	Group		10:1	Checked	CODY
Prevailing Surface finish ▽▽(▽▽▽)					Reversing Handle				Approved	CODY
Surface treatment -										
Heat treatment -					Assembly Number: 10211		ReCurta	10066-5		