# [Summary] Feedforward Neural Network

Jae Yun JUN KIM*

**Note: Remember that this document is ONLY a summary of the entire lecture that you followed in class. As you were notified previously several times, you should have taken lecture notes from class, and you should study with those lecture notes for the Pre-Lab, Lab, and the final exam.**

## 1 Introduction

A **feedforward neural network (FFNN)** can be used to solve a classification problem.
A FFNN is a network of neurons inspired from the **biological neural network**.

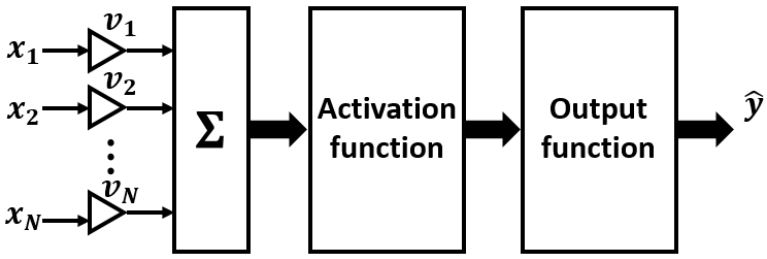


Figure 1: Model for an artificial neuron

## 2 FFNN of two layers

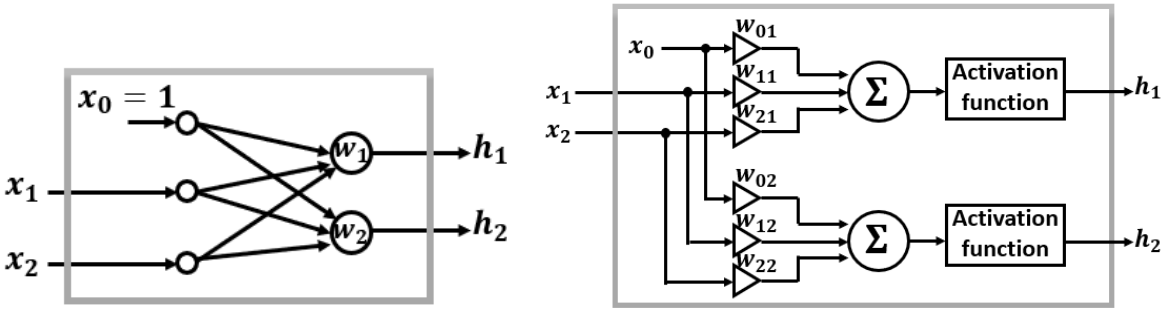


(a) Feedforward neural network with two layers

(b) Feedforward neural netowrk with two layers (explained)

Figure 2: Feedforward neural network with two layers

*ECE, Graduate School of Engineering, 10 Rue Sextius Michel 75015 Paris, France; jae-yun.jun-kim@ece.fr

# 3 FFNN of three layers

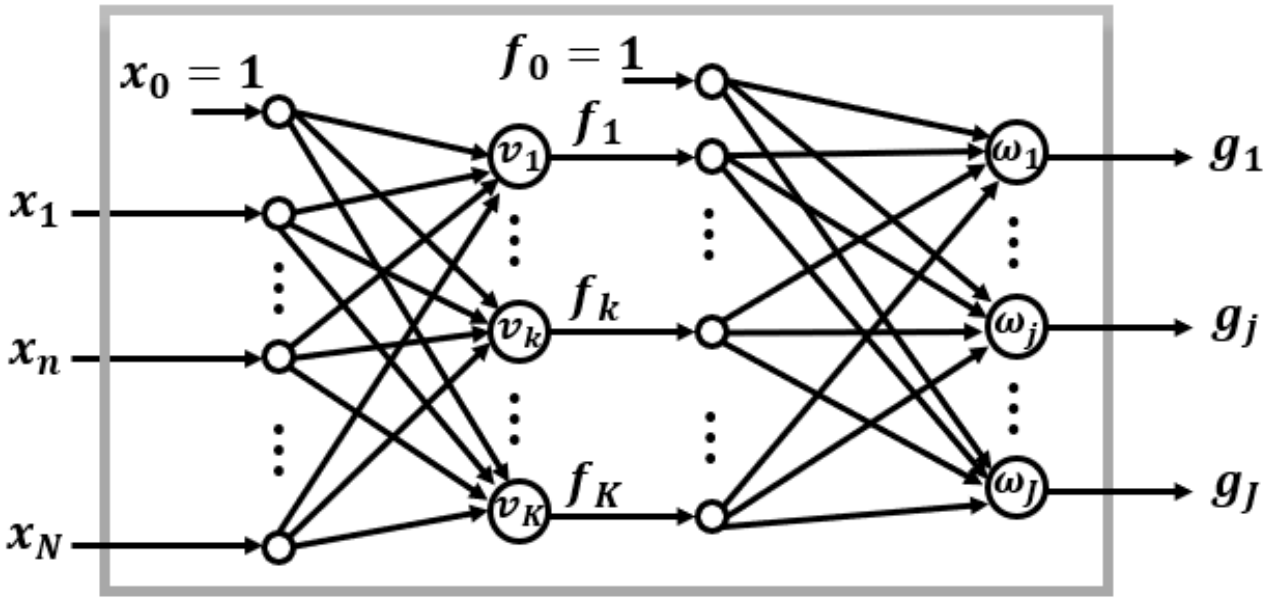


Figure 3: Feedforward neural network with three layers

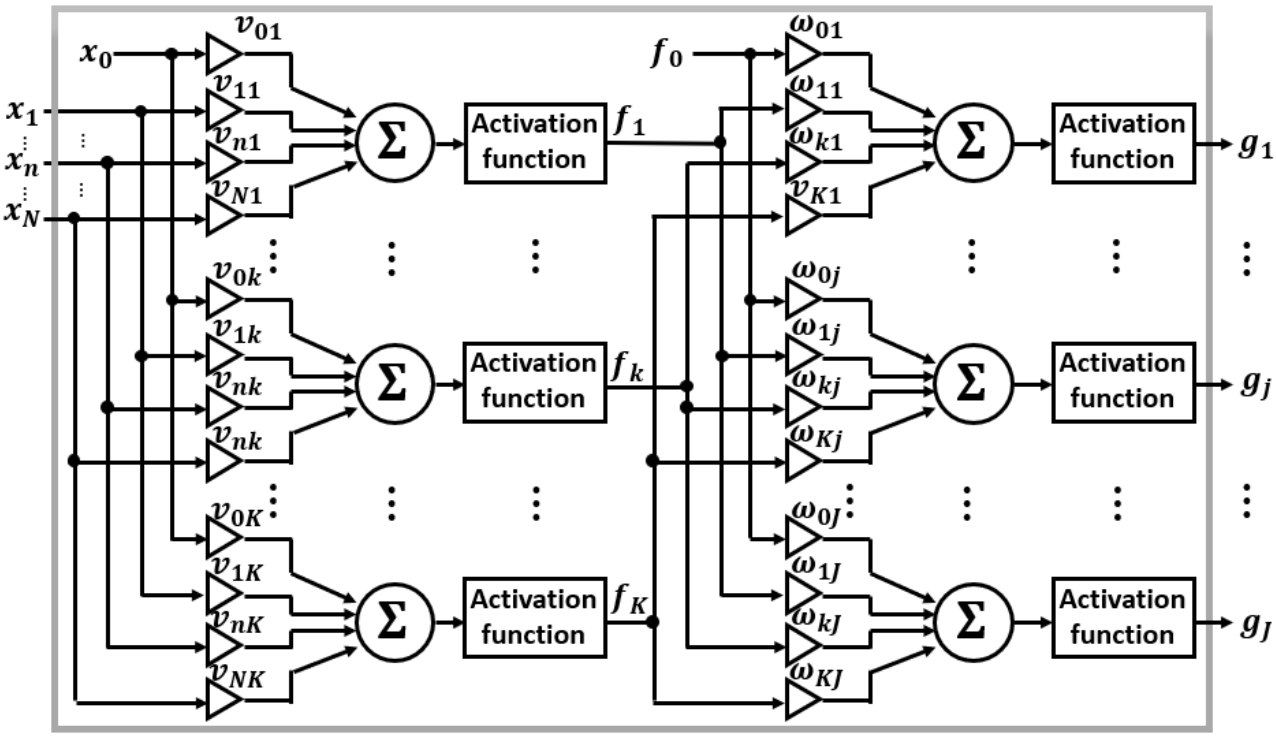


Figure 4: Feedforward neural network with three layers (explained)

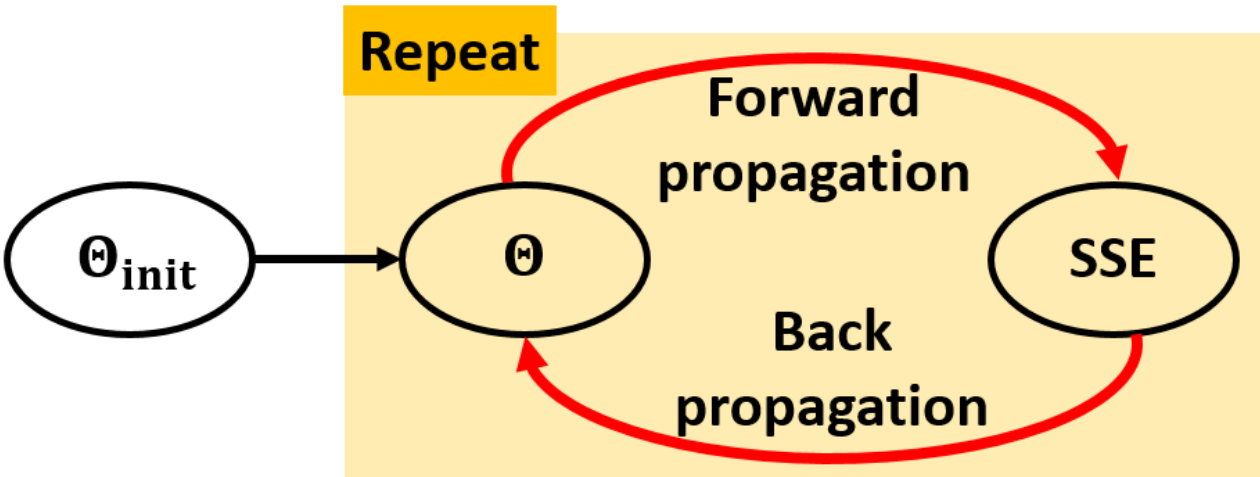


Figure 5: Forward propagation and backpropagation

# 4 Forward propagation and backpropagation

## 4.1 Forward propagation

Input data matrix

$$X = \begin{bmatrix} \left(x^{(1)}\right)^T \\ \vdots \\ \left(x^{(I)}\right)^T \end{bmatrix}, \qquad \text{where} \quad x^{(i)} \in \mathbb{R}^{N\times 1} \tag{1}$$

Extended input data matrix

$$\overline{X} = \begin{bmatrix} \mathcal{I} & X \end{bmatrix} = \begin{bmatrix} \left(\overline{x}^{(1)}\right)^T \\ \vdots \\ \left(\overline{x}^{(I)}\right)^T \end{bmatrix}, \qquad \text{where} \quad \mathcal{I} = [1, \cdots, 1]^T \in \mathbb{R}^{I\times 1} \tag{2}$$

$$\overline{\overline{X}} = \overline{X} \cdot v = \begin{bmatrix} \left(\overline{x}^{(1)}\right)^T \cdot v \\ \vdots \\ \left(\overline{x}^{(I)}\right)^T \cdot v \end{bmatrix} \tag{3}$$

Define

$$F = \left(1 + \exp\left(-\overline{\overline{X}}\right)\right)^{-1} = \begin{bmatrix} \left(f^{(1)}\right)^T \\ \vdots \\ \left(f^{(I)}\right)^T \end{bmatrix} \tag{4}$$

where the operator $^{-1}$ represents the elementwise inversion.

$$\overline{F} = \begin{bmatrix} \mathcal{I} & F \end{bmatrix} = \begin{bmatrix} \left(\overline{f}^{(1)}\right)^T \\ \vdots \\ \left(\overline{f}^{(I)}\right)^T \end{bmatrix}, \qquad \text{where} \quad \mathcal{I} = [1, \cdots, 1]^T \in \mathbb{R}^{I\times 1} \tag{5}$$

$$\overline{\overline{F}} = \overline{F} \cdot \omega = \begin{bmatrix} \left(\overline{f}^{(1)}\right)^T \cdot \omega \\ \vdots \\ \left(\overline{f}^{(I)}\right)^T \cdot \omega \end{bmatrix} \tag{6}$$

Define

$$G = \left(1 + \exp\left(-\overline{\overline{F}}\right)\right)^{-1} = \begin{bmatrix} \left(g^{(1)}\right)^T \\ \vdots \\ \left(g^{(I)}\right)^T \end{bmatrix} \tag{7}$$

where $^{-1}$ represents once again the elementwise inversion.

Then, one can find the labels using the following algorithm:

**Algorithm 1:** find labels

```
for i = 1 : I do
    ŷ^(i) ← arg max_j g^(i);
return label;
```

p Let us define the **sum of squared errors (SSE)** as

$$E = \frac{1}{2} \sum_{i=1}^{I} \left\| g^{(i)} - y^{(i)} \right\|_2^2 = \frac{1}{2} \sum_{i=1}^{I} \sum_{j=1}^{J} \left( g_j^{(i)} - y_j^{(i)} \right)^2, \tag{8}$$

## 4.2 Backpropagation

In this course, the backpropagation is performed using the batch gradient descent algorithm. The update rules are

$$\begin{aligned} v_{nk} &\leftarrow v_{nk} - \alpha_v \frac{\partial E}{\partial v_{nk}} \\ w_{kj} &\leftarrow w_{kj} - \alpha_w \frac{\partial E}{\partial w_{kj}}. \end{aligned} \tag{9}$$

But, what are $\frac{\partial E}{\partial v_{nk}}$ and $\frac{\partial E}{\partial w_{kj}}$?

Let us compute first $\frac{\partial E}{\partial w_{kj}}$.

$$\frac{\partial E}{\partial w_{kj}} = \frac{\partial}{\partial w_{kj}} \left[ \frac{1}{2} \sum_{i=1}^{I} \sum_{j'=1}^{J} \left( g_{j'}^{(i)} - y_{j'}^{(i)} \right)^2 \right] = \sum_{i=1}^{I} \frac{\partial}{\partial w_{kj}} \left[ \frac{1}{2} \sum_{j'=1}^{J} \left( g_{j'}^{(i)} - y_{j'}^{(i)} \right)^2 \right] = \sum_{i=1}^{I} \left( g_j^{(i)} - y_j^{(i)} \right) \frac{\partial g_j^{(i)}}{\partial w_{kj}}, \tag{10}$$

where

$$
\begin{aligned}
\frac{\partial {g_j}^{(i)}}{\partial w_{kj}} &= \frac{\partial}{\partial w_{kj}} \left( \frac{1}{1+e^{\left(-\left(\overline{f}^{(i)}\right)^T w_j\right)}} \right) \\
&= \frac{-e^{\left(-\left(\overline{f}^{(i)}\right)^T w_j\right)}}{\left(1+e^{\left(-\left(\overline{f}^{(i)}\right)^T w_j\right)}\right)^2} \left(-{f_k}^{(i)}\right) \\
&= \frac{1}{1+e^{\left(-\left(\overline{f}^{(i)}\right)^T w_j\right)}} \left(1 - \frac{1}{1+e^{\left(-\left(\overline{f}^{(i)}\right)^T w_j\right)}}\right) {f_k}^{(i)} \\
&= {g_j}^{(i)} \left(1 - {g_j}^{(i)}\right) {f_k}^{(i)}.
\end{aligned} \tag{11}
$$

Hence,

$$
\frac{\partial E}{\partial w_{jk}} = \sum_{i=1}^{I} \left(g_j^{(i)} - y_j^{(i)}\right) g_j^{(i)} \left(1 - g_j^{(i)}\right) f_k^{(i)}. \tag{12}
$$

$$
w_{kj} \leftarrow w_{kj} - \alpha_1 \sum_{i=1}^{I} \left(g_j^{(i)} - y_j^{(i)}\right) g_j^{(i)} \left(1 - g_j^{(i)}\right) f_k^{(i)}, \tag{13}
$$

where $k = \{0, 1, \cdots, K\}$ and $j = \{1, 2, \cdots, J\}$.

Now, let us compute $\frac{\partial E}{\partial v_{nk}}$.

$$
\frac{\partial E}{\partial v_{nk}} = \frac{\partial}{\partial v_{nk}} \left[ \frac{1}{2} \sum_{i=1}^{I} \sum_{j=1}^{J} \left(g_j^{(i)} - y_j^{(i)}\right)^2 \right] = \sum_{i=1}^{I} \sum_{j=1}^{J} \frac{\partial}{\partial v_{nk}} \left[ \frac{1}{2} \left(g_j^{(i)} - y_j^{(i)}\right)^2 \right]. \tag{14}
$$

Then,

$$
\frac{\partial}{\partial v_{nk}} \left[ \frac{1}{2} \left(g_j^{(i)} - y_j^{(i)}\right)^2 \right] = \left(g_j^{(i)} - y_j^{(i)}\right) \frac{\partial g_j^{(i)}}{\partial v_{nk}}, \tag{15}
$$

where

$$
\frac{\partial {g_j}^{(i)}}{\partial v_{nk}} = \frac{\partial {g_j}^{(i)}}{\partial {f_k}^{(i)}} \frac{\partial {f_k}^{(i)}}{\partial v_{nk}}. \tag{16}
$$

On the other hand,

$$
\begin{aligned}
\frac{\partial {g_j}^{(i)}}{\partial {f_k}^{(i)}} &= \frac{\partial}{\partial {f_k}^{(i)}} \left( \frac{1}{1+e^{\left(-\left(\overline{f}^{(i)}\right)^T w_j\right)}} \right) \\
&= \frac{-e^{\left(-\left(\overline{f}^{(i)}\right)^T w_j\right)}}{\left(1+e\left(-\left(\overline{f}^{(i)}\right)^T w_j\right)\right)^2} (-w_{kj}) \\
&= \frac{1}{1+e^{\left(-\left(\overline{f}^{(i)}\right)^T w_j\right)}} \left(1 - \frac{1}{1+e^{\left(-\left(\overline{f}^{(i)}\right)^T w_j\right)}}\right) w_{kj} \\
&= {g_j}^{(i)} \left(1 - {g_j}^{(i)}\right) w_{kj}.
\end{aligned} \tag{17}
$$

Now,

$$
\begin{aligned}
\frac{\partial {f_k}^{(i)}}{\partial v_{nk}} &= \frac{\partial}{\partial v_{nk}} \left( \frac{1}{1+e^{\left(-\left(\overline{x}^{(i)}\right)^T v_k\right)}} \right) \\
&= \frac{-e^{\left(-\left(\overline{x}^{(i)}\right)^T v_k\right)}}{1+e^{\left(-\left(\overline{x}^{(i)}\right)^T v_k\right)}} \left(-{x_n}^{(i)}\right) \\
&= \frac{1}{1+e^{\left(-(\overline{x}^{(i)})^T v_k\right)}} \left(1 - \frac{1}{1+e^{\left(-\left(\overline{x}^{(i)}\right)^T v_k\right)}}\right) {x_n}^{(i)} \\
&= {f_k}^{(i)} \left(1 - {f_k}^{(i)}\right) {x_n}^{(i)}.
\end{aligned}
\tag{18}
$$

Hence,

$$
\frac{\partial E}{\partial v_{nk}} = \sum_{i=1}^{I} \sum_{j=1}^{J} \left\{ \left(g_j^{(i)} - y_j^{(i)}\right) g_j^{(i)} \left(1 - g_j^{(i)}\right) w_{kj} f_k^{(i)} \left(1 - f_k^{(i)}\right) x_n^{(i)} \right\}. \tag{19}
$$

Now, by considering all training examples,

$$
v_{nk} \leftarrow v_{nk} - \alpha_2 \sum_{i=1}^{I} \sum_{j=1}^{J} \left\{ \left(g_j^{(i)} - y_j^{(i)}\right) g_j^{(i)} \left(1 - g_j^{(i)}\right) w_{kj} f_k^{(i)} \left(1 - f_k^{(i)}\right) x_n^{(i)} \right\}, \tag{20}
$$

where $n = \{0, 1, \cdots, N\}$ and $k = \{1, 2, \cdots, K\}$.