LUND UNIVERSITY

Project in Wireless Communication
Lecture 4: OFDM & synchronization

FREDRIK RUSEK, FREDRIK TUFVESSON

ELECTRICAL AND INFORMATION TECHNOLOGY

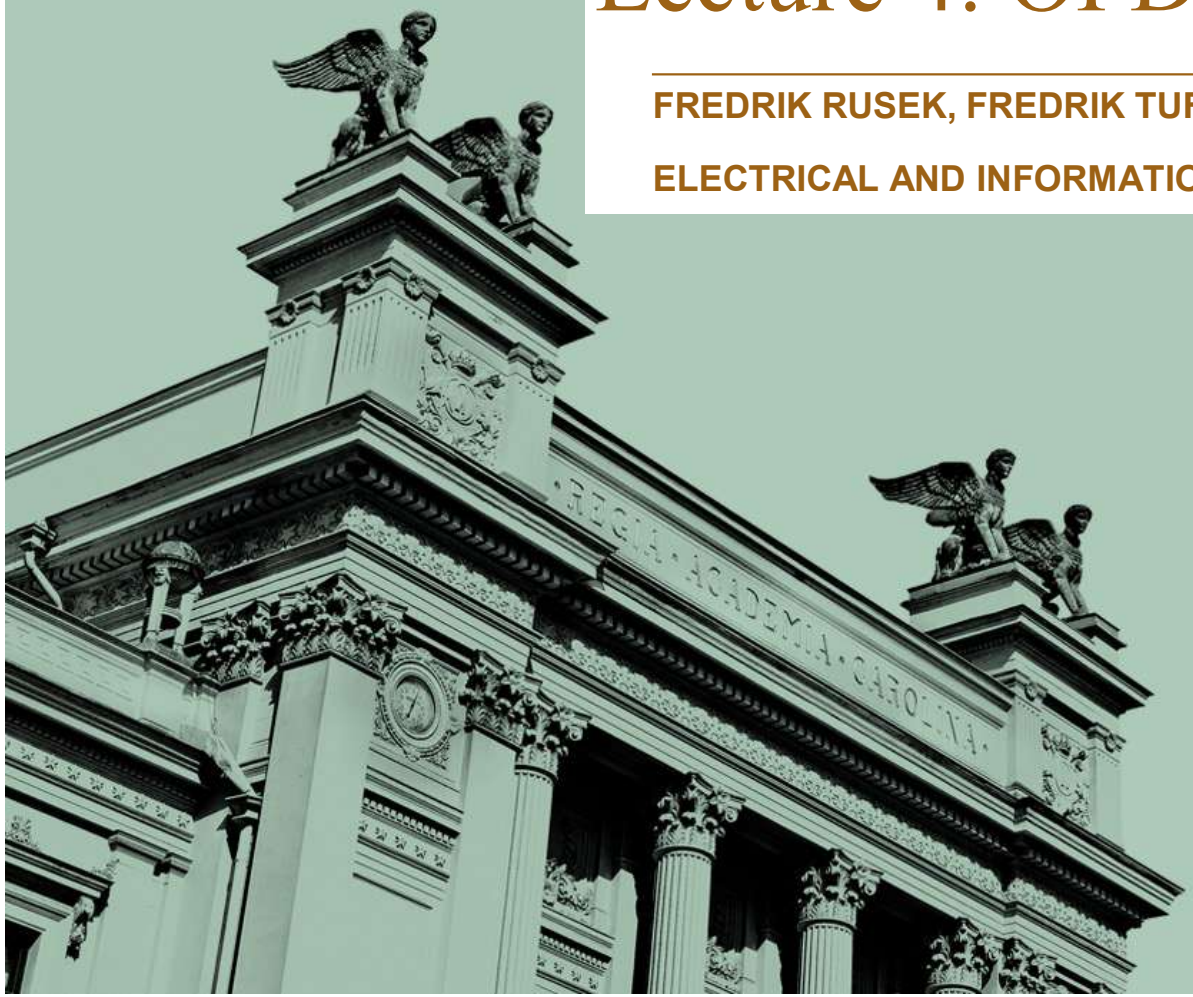

ISI channels

As seen in previous lecture, after pulse shaping and carrier modulation at the TX, and carrier demodulation, matched filtering and sampling at the Rx, the channel model can be described through

$$y = h * a + n$$

The data symbols are denoted **a**, **h** denotes the channel impulse response, and **n** denotes WGN. All variables are here complex valued.

For example, **h** could take the form

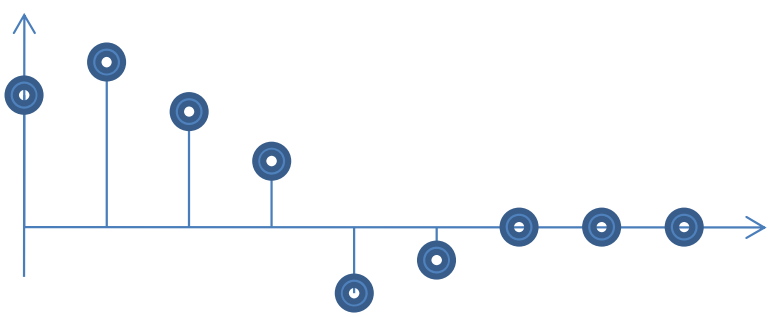

ISI channels

How should we estimate **a** from **y**?

Since there is memory is the signal **y,** it can be represented with a trellis and the Viterbi algorithm can be applied.

How many states are there in the Viterbi algorithm?

This depends on the length of **h** but also on the modulation format used.

Definition 2

The memory of the ISI channel is said to be the length of the channel, L_{ISI}, minus 1.

Property 4

Assume that the data symbols are belongs to a M-QAM constellation.

Then the number of states in the Viterbi is $M^{L_{ISI}-1}$

LUND UNIVERSITY

ISI channels – Viterbi equalizer

This number quickly grows large and the Viterbi cannot be used. For the channel given previously and with QPSK we get

$$L_{ISI} = 9 \qquad M = 4 \qquad \#states = 4^8 = 2^{16} = 65536$$

In high speed real-time applications this workload is extremely demanding.

What can be done?

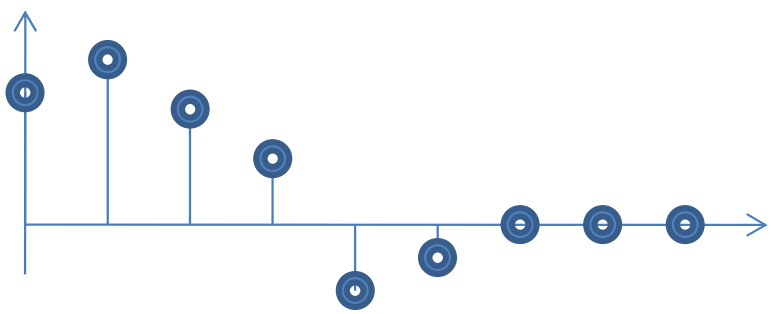

ISI Channels - Zero-forcing equalization

Find a filter **c** so that

$$\mathrm{c} * \mathrm{h} = \delta$$

$$(\mathrm{c} * \mathrm{h})[n] = \sum c_l h_{n-l} = \delta_n$$

It works, but gives rise to so-called noise enhancement, amplification of noise.

In conclusion:

- The optimal decoder is the Viterbi algorithm, but it often fails due to complexity issues.
- The simple ZF equlizer fails due to noise enhancement
- There are intermediate schemes as well (MMSE, DFE, etc), but with performance losses

LUND UNIVERSITY

OFDM,
Orthogonal Frequency Division Multiplexing

Main idea: Convert the ISI channel into a set of independent parallel channels.

This enables optimal detection with trivial complexity!

Standard confusion:

OFDM is ***not*** better than ”non-OFDM + Viterbi-algorithm”.

There is no need for OFDM unless there is ”large” ISI.

LUND UNIVERSITY

OFDM, signalling chain

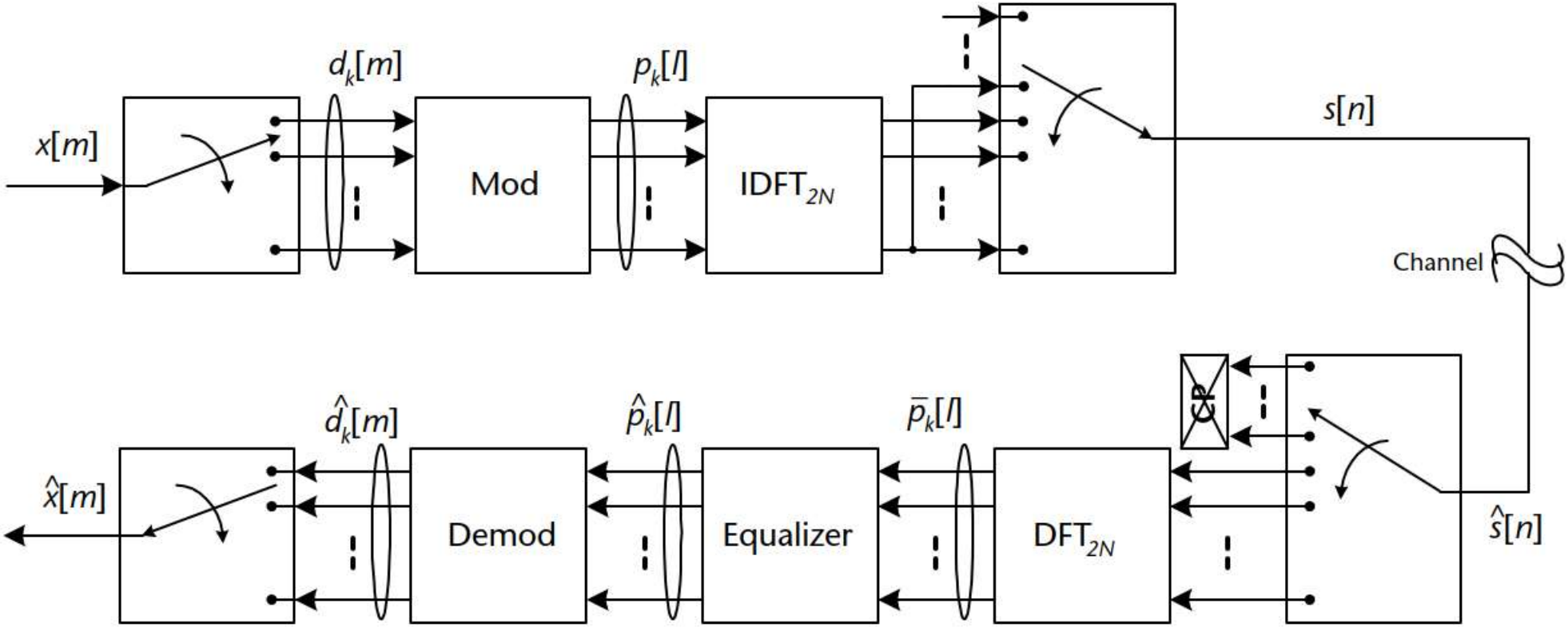

Source: T. F. Collins et al, “Software-Defined Radio for Engineers”

OFDM

The structure of the signaling is

Data symbols: $$X = [\underbrace{x_0 \quad \dots \quad x_{N-1}}_{\text{symbol 1}} \quad \underbrace{x_N \quad \dots \quad x_{2N-1}}_{\text{symbol 2}} \quad \underbrace{\dots \quad \dots}_{\text{etc etc}}]^T$$

After IFFT: $$A = [\underbrace{a_0 \quad \dots \quad a_{N-1}}_{\text{symbol 1}} \quad \underbrace{a_N \quad \dots \quad a_{2N-1}}_{\text{symbol 2}} \quad \underbrace{\dots \quad \dots}_{\text{etc etc}}]^T$$

With CP:

$$\tilde{A} = [\underbrace{a_{N-Ncp} \quad \dots \quad a_{N-1}}_{\text{CP1}} \quad \underbrace{a_0 \quad \dots \quad a_{N-1}}_{\text{Symbol 1}} \quad \underbrace{a_{2N-Ncp} \quad \dots \quad a_{2N-1}}_{\text{CP2}} \quad \underbrace{a_N \quad \dots \quad a_{2N-1}}_{\text{Symbol 2}} \quad \dots \quad]^T$$

OFDM receiver

Received signal

$$R = \left[\underbrace{r_0 \quad r_1 \quad \dots \quad r_{Ncp-1}}_{\text{Cyclic prefix Discard}} \quad \underbrace{r_{Ncp} \quad \dots \quad r_{Ncp+N-1}}_{\text{Data Send to FFT}} \quad \underbrace{\dots \quad \dots \quad \dots}_{\text{Cyclic prefix Discard}} \quad \dots \right]^T$$

Etc etc

Cyclic prefix

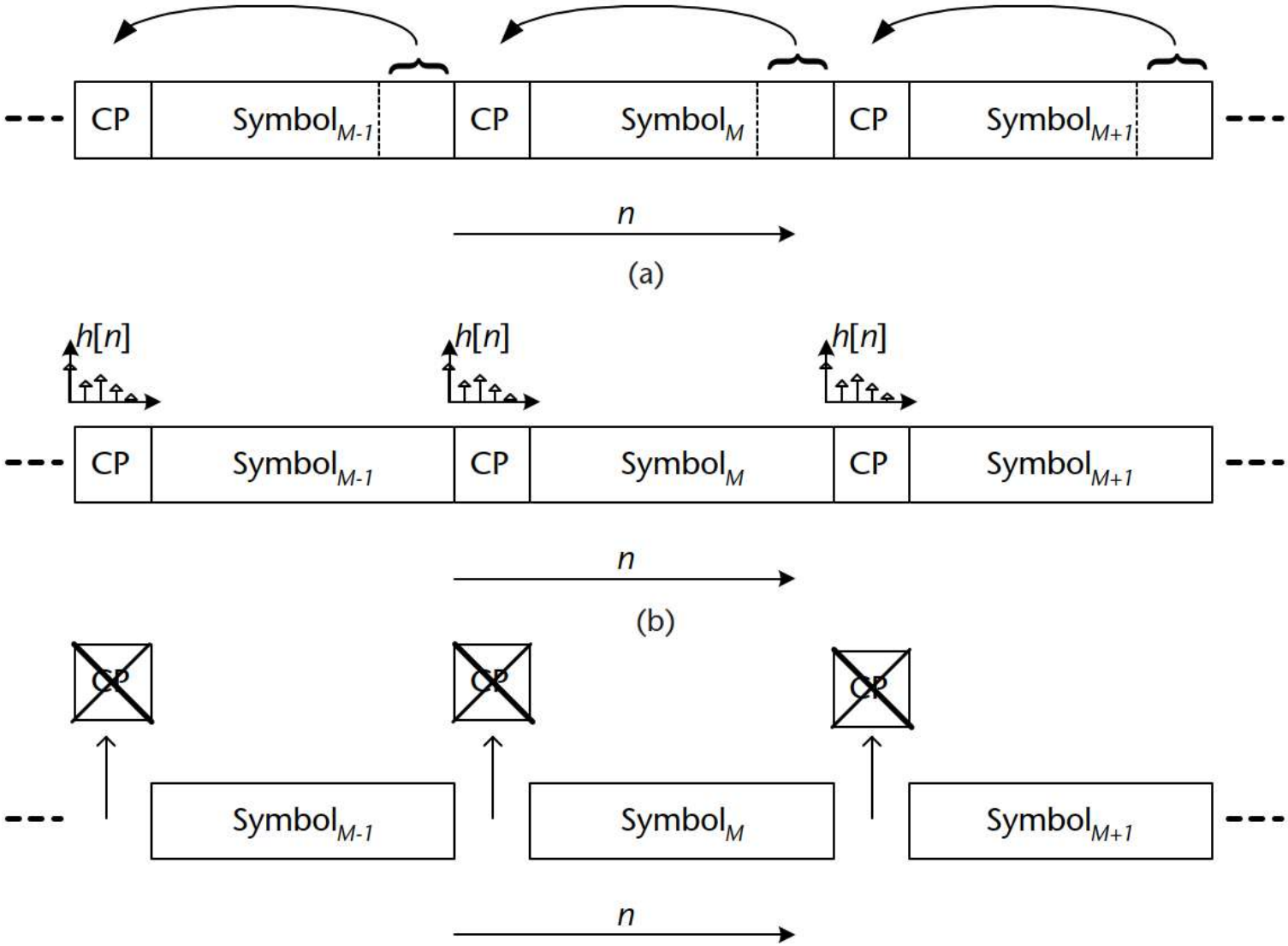

Source: T. F. Collins et al, "Software-Defined Radio for Engineers"

D/A conversion

So far only the discrete-time models have been discussed.

After the IFFT, adding CP, we have a vector **s** that should be transmitted. We need to construct a time continuous signal $s(t)$.

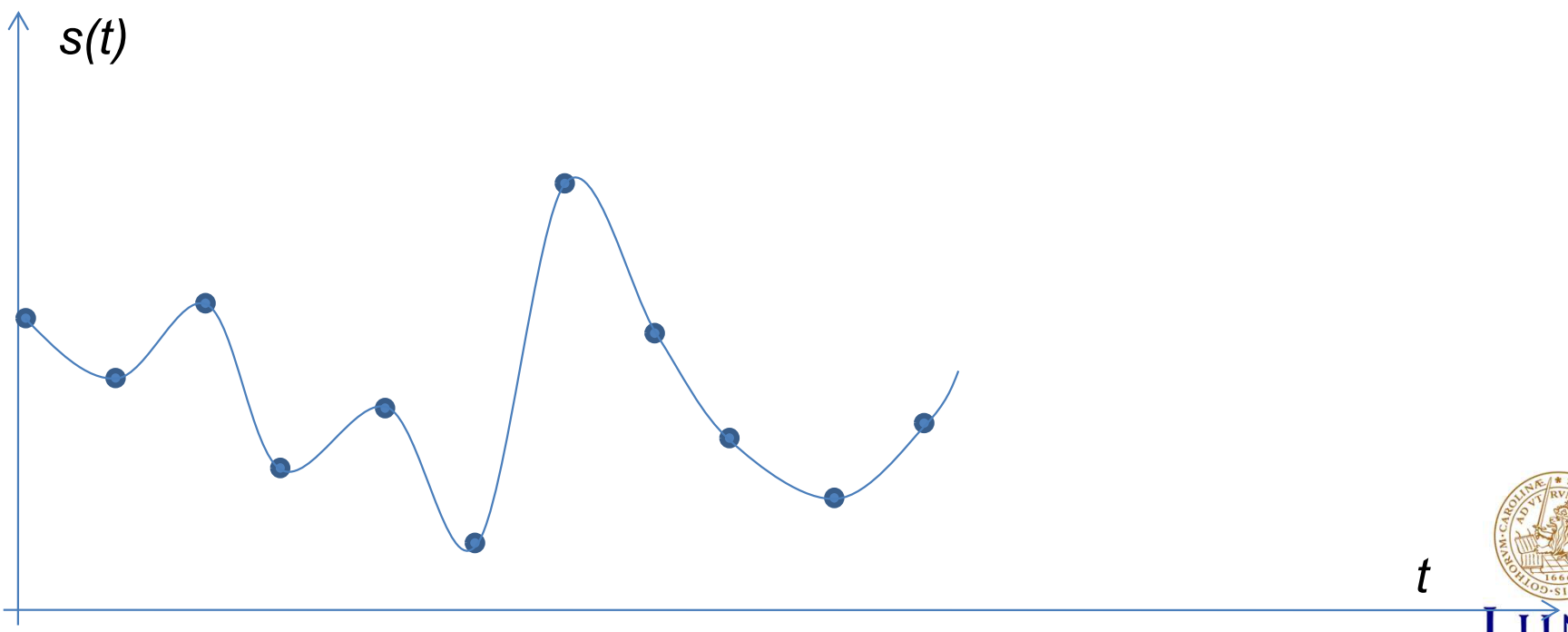

D/A

One way to accomplish this is to use linear interpolation followed by a low pass filter

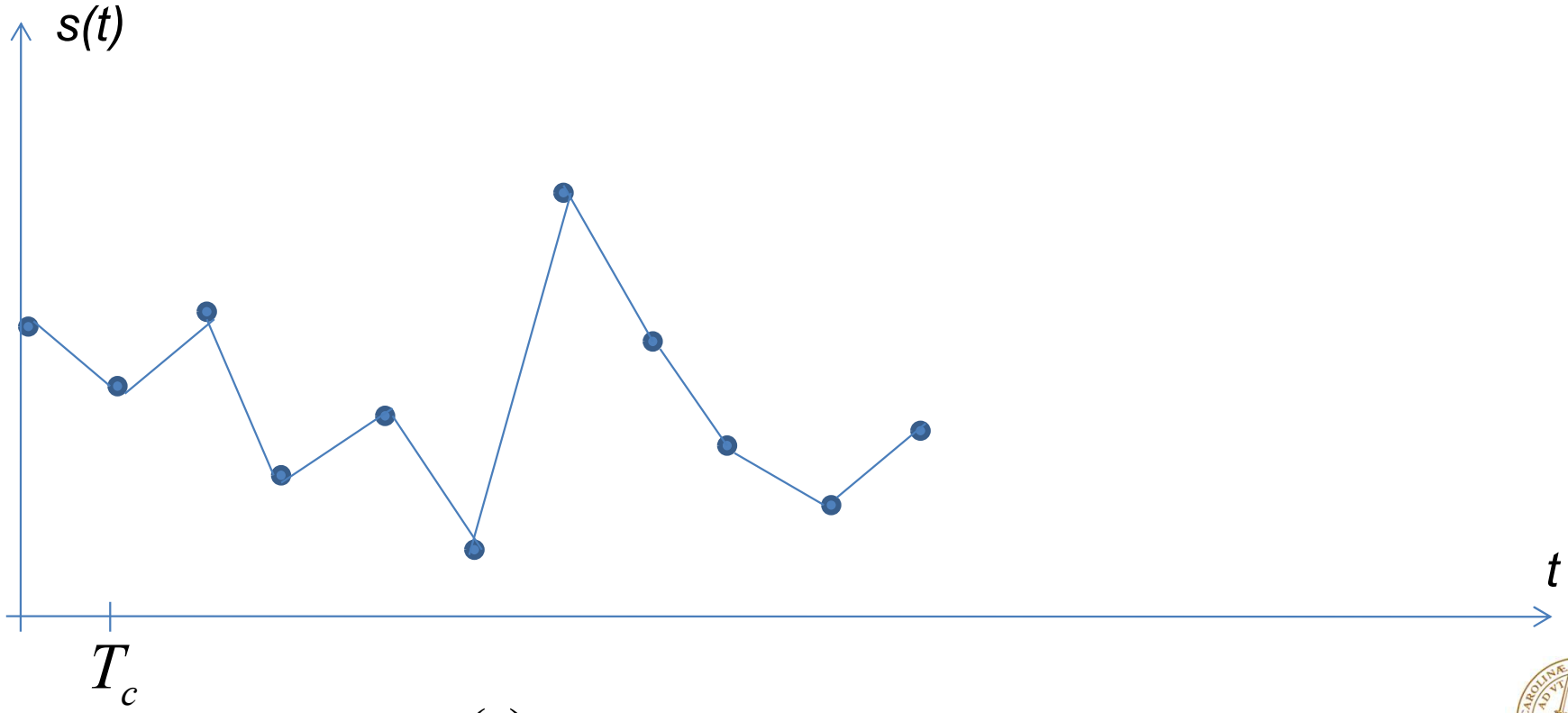

D/A – the sampling theorem

It is known that the necessary (one-sided) bandwidth of $s(t)$ is $1/2T_c$ Hz

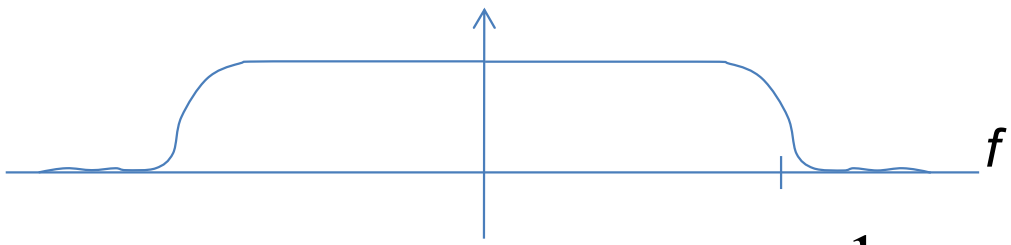

$$cutoff \approx \frac{1}{2T_c} Hz$$

This is essentially the statement of the sampling theorem.

The RF receiver

Spectrally, we receive the following signal

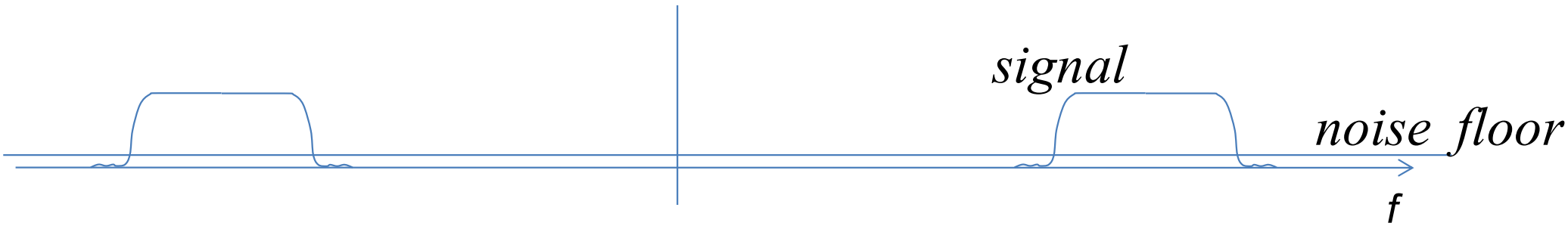

After carrier de-modulation we get

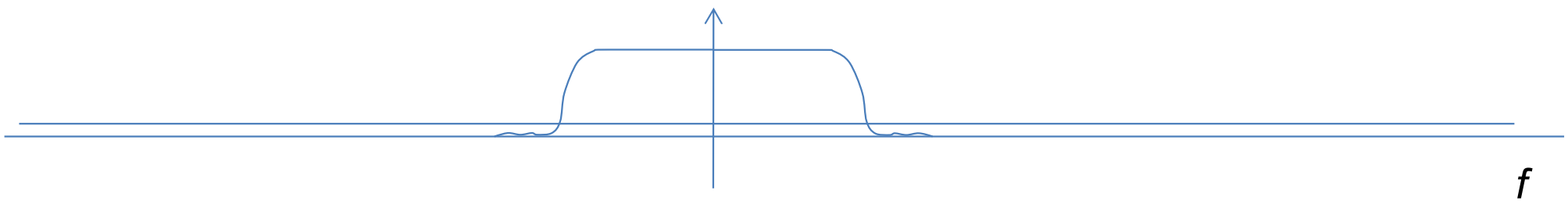

The RF receiver

If this signal is sampled, the noise will be folded back on the signal (aliasing).

To avoid this, low pass filter the signal to get

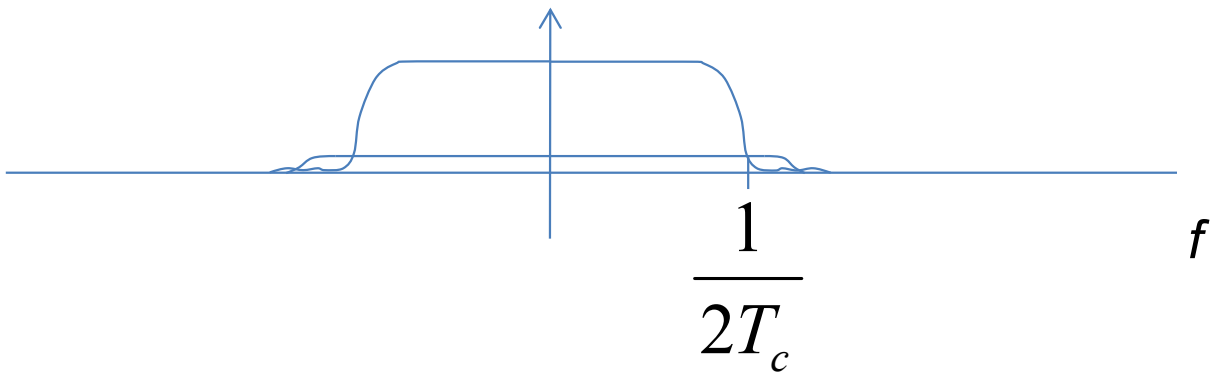

This signal can now be sampled with spacing T_c

In practice the outer sub-channels, close to the edges, are set to zero to have some margin and make implementation easier

Synchronization in OFDM

Periodic Pilots

To find the start of the signal, we previously used the ”peak” of the filtered received baseband signal.

If the symbol time is much less than the duration of the channel, this may cause incorrect synchronization

Example:

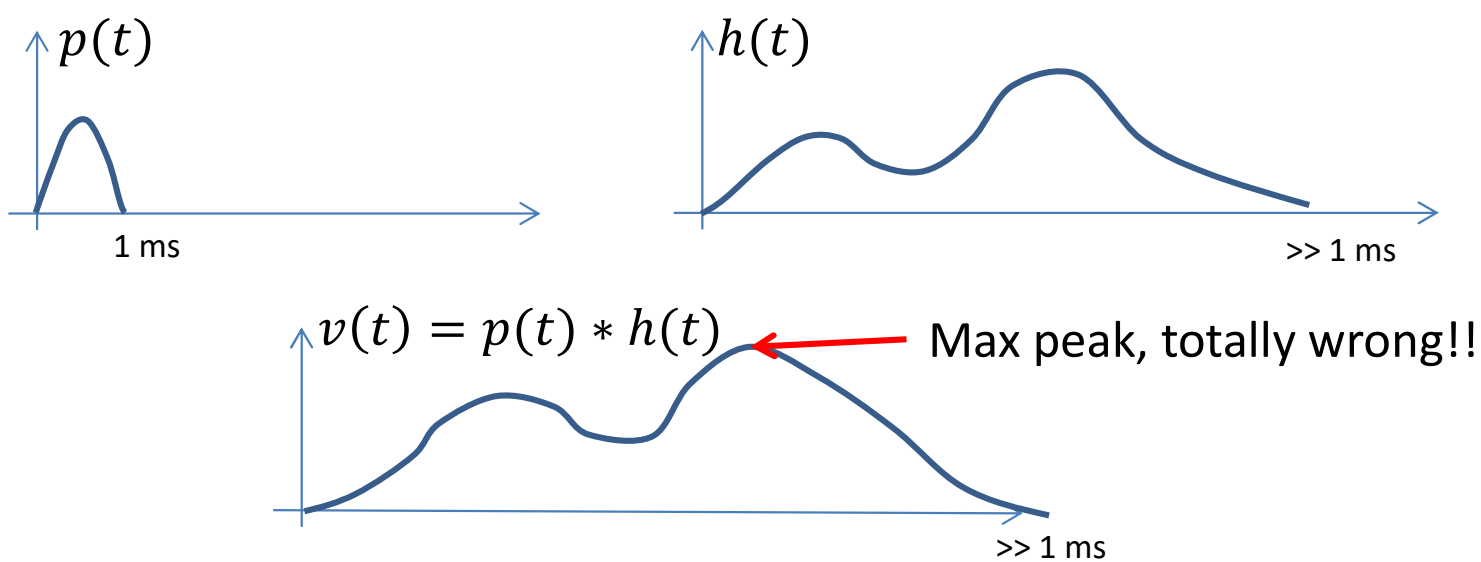

Periodic Pilots

In OFDM, the time interval between two outputs (samples) from the IFFT is usually much shorter than the duration of the channel, so ”looking for peaks” is not a clever idea.

Now forget about OFDM for the moment....

Assume that the pilot structure is periodic:

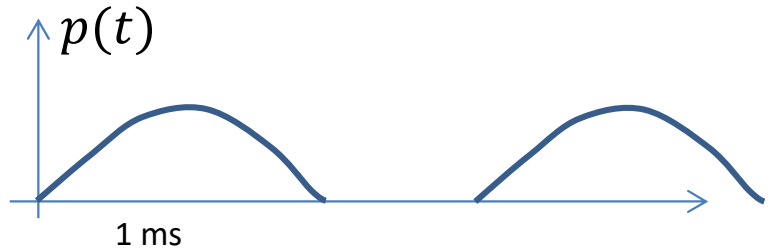

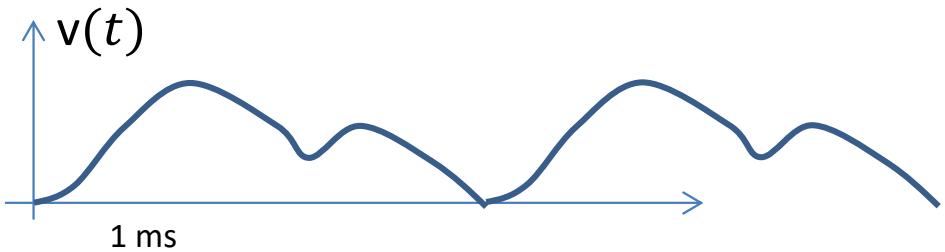

We don’t know the channel, so we don’t know *v(t)*. But we do know that *v(t)* will also be periodic!

Periodic Pilots

We can look for this correlation in the received signal (shown without noise)

It is assumed for the moment that the data-carrying signal does not contain any correlation.

Task: find T_0

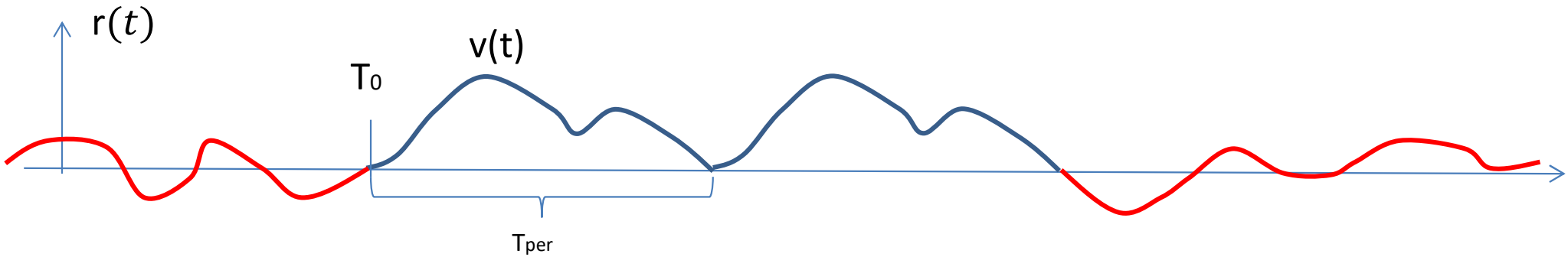

Periodic Pilots

We can look for this correlation in the received signal (shown without noise)

It is assumed for the moment that the data-carrying signal does not contain any correlation.

Task: find T_0

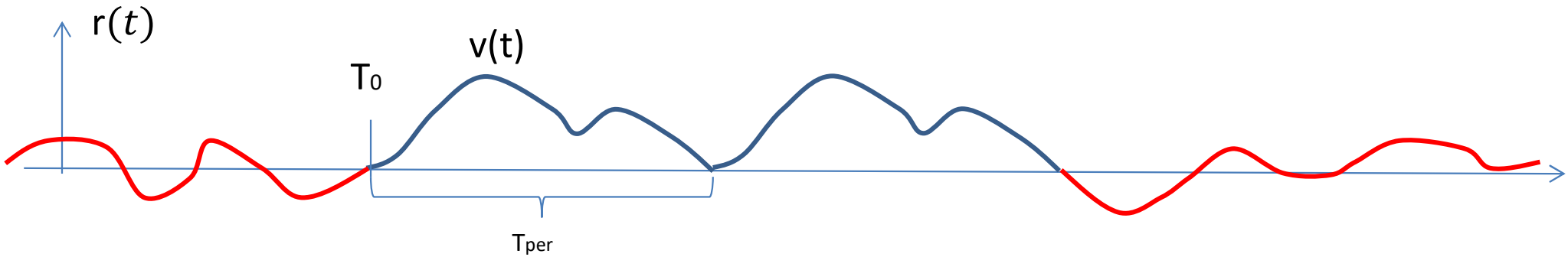

Define $$\mu(t) \equiv \int_0^{T_{per}} r(t+\tau) r^*\left(t + T_{per} + \tau\right) d\tau$$

Periodic Pilots

We can look for this correlation in the received signal (shown without noise)

It is assumed for the moment that the data-carrying signal does not contain any correlation.

Task: find T_0

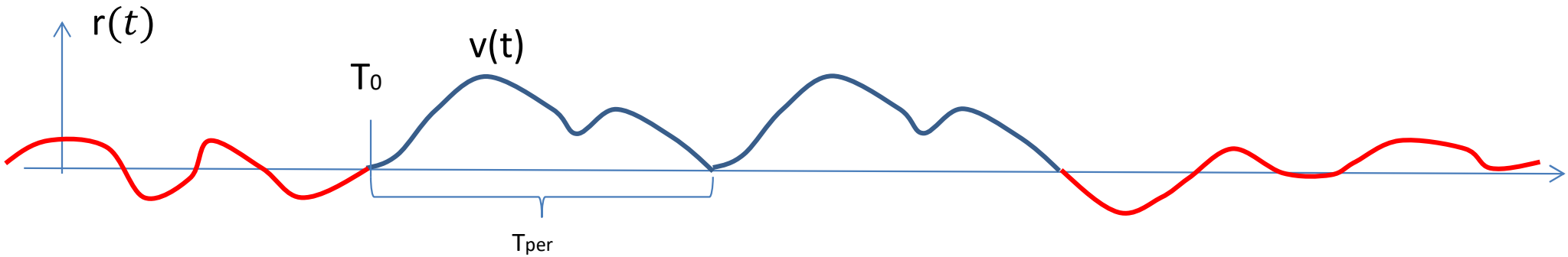

$$\mu(T_0) = \int_0^{T_{per}} r(T_0 + \tau) r^*(T_0 + T_{per} + \tau) d\tau$$

Periodic Pilots

We can look for this correlation in the received signal (shown without noise)

It is assumed for the moment that the data-carrying signal does not contain any correlation.

Task: find T_0

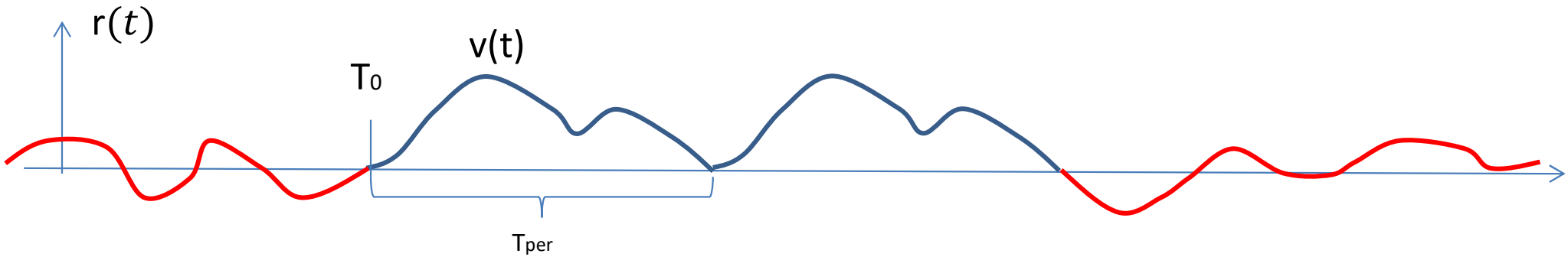

$$\mu(T_0) = \int_0^{T_{per}} r(T_0+\tau) r^*(T_0+T_{per}+\tau) d\tau = \int_0^{T_{per}} |r(T_0+\tau)|^2 d\tau = E_v$$

Periodic Pilots

We can look for this correlation in the received signal (shown without noise)

It is assumed for the moment that the data-carrying signal does not contain any correlation.

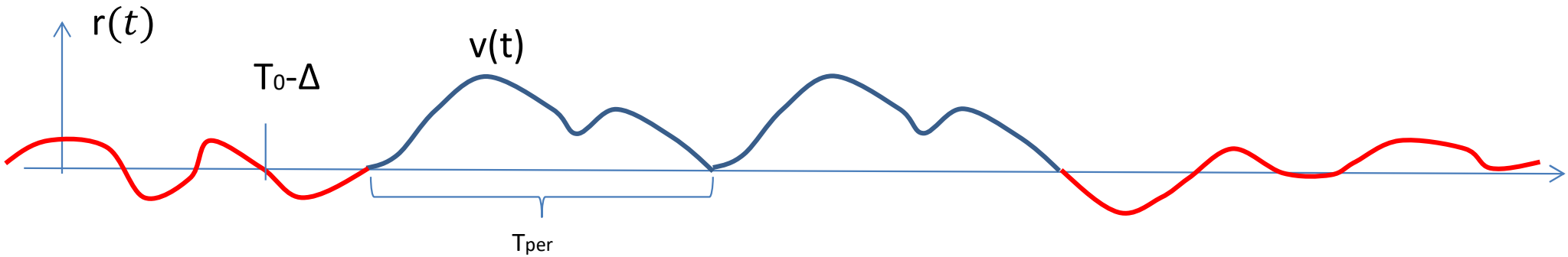

$$\mu(T_0 - \Delta) = \int_0^{T_{per}} r(T_0 - \Delta + \tau) r^*\left(T_0 - \Delta + T_{per} + \tau\right) d\tau$$

Periodic Pilots

We can look for this correlation in the received signal (shown without noise)

It is assumed for the moment that the data-carrying signal does not contain any correlation.

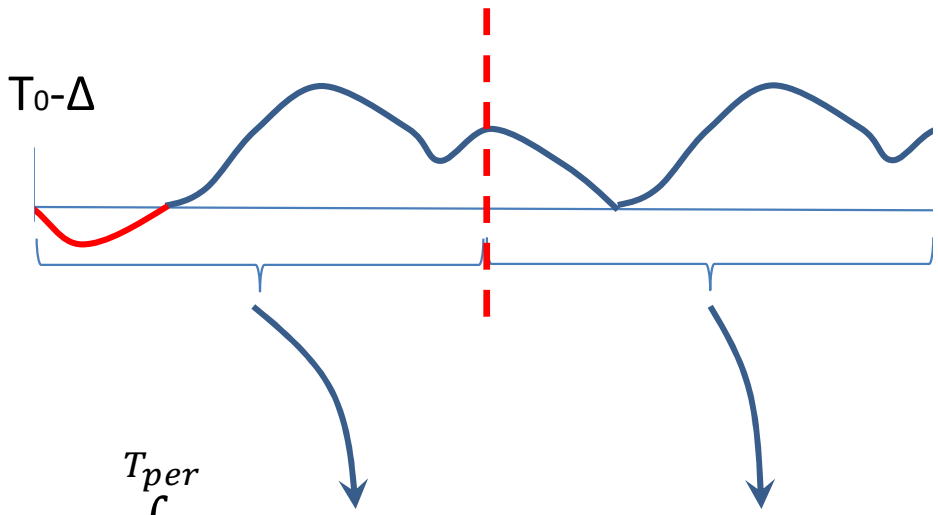

$$\mu(T_0 - \Delta) = \int_0^{T_{per}} r(T_0 - \Delta + \tau) r^*(T_0 - \Delta + T_{per} + \tau) d\tau$$

Which is larger: $\mu(T_0)$ or $\mu(T_0 - \Delta)$?

Periodic Pilots

Normalization by Cauchy-Schwarz:

$$\int f(x)g(x)dx \leq \sqrt{\int |f(x)|^2}\sqrt{\int |g(x)|^2}$$

$$\frac{\int f(x)g(x)dx}{\sqrt{\int |f(x)|^2}\sqrt{\int |g(x)|^2}} \leq 1$$

Equality if *g(x)=k * f(x),* for some constant *k*

Periodic Pilots

Define

$$\tilde{\mu}(t) \equiv \frac{\int_0^{T_{per}} r(t+\tau) r^*\left(t + T_{per} + \tau\right) d\tau}{\sqrt{\int |r(t+\tau)|^2} \sqrt{\int \left|r(t + T_{per} + \tau)\right|^2}}$$

Now

$$\tilde{\mu}(T_0) = 1$$

And

$$\tilde{\mu}(T_0 - \Delta) < 1$$ For any Δ, with (very) high probability

LUND UNIVERSITY

Periodic Pilots

We can look for this correlation in the received signal (shown without noise)

It is assumed for the moment that the data-carrying signal does not contain any correlation.

Task: find T_0

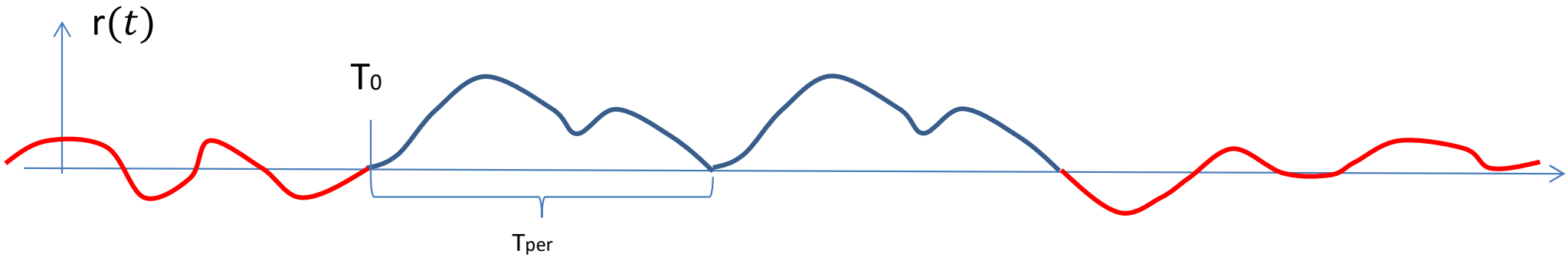

$$\textit{start time} = \arg\max_{t} \tilde{\mu}(t)$$

Periodic pilots in OFDM

How to construct a periodic pilot in OFDM?

Given the input symbols ($a_0, a_1, \ldots, a_{N-1}$), the transmitted samples ($x_0, x_1, \ldots, x_{N-1}$) are formed by applying the IFFT.

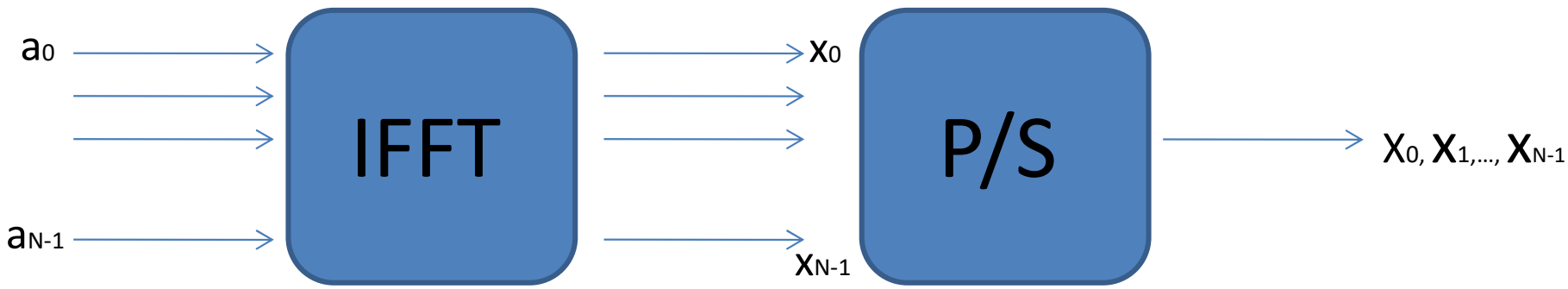

Mathematically we have

$$x_k = \frac{1}{N}\sum_{l=0}^{N-1} a_l \exp(i2\pi lk/N)$$

Periodic pilots in OFDM

Now suppose that every second input symbol equals 0, i.e.,

$$a_{2k+1} = 0, \quad k = 0,1,2,....$$

We get the OFDM symbol samples

$$x_k = \sum_{l=0}^{N-1} a_l \exp(-i2\pi lk / N) = \sum_{even\ l} a_l \exp(-i2\pi lk / N)$$

Now consider $x_{k+N/2}$

$$x_{k+N/2} = \sum_{even\ l} a_l \exp(-i2\pi l(k + N/2) / N) = \sum_{even\ l} a_l \exp(-i2\pi lk / N - il\pi)$$

$$= \sum_{even\ l} a_l \exp(-i2\pi lk / N) = x_k$$

LUND UNIVERSITY

Periodic pilots in OFDM

Hence, the transmitted signal is periodic with period $N/2$.

In OFDM, the time between two outputs of the IFFT is short in comparison with the Channel.

But, the period of the pilots is $N/2$ such intervals, which is much longer than the duration of the channel (which is the key feature of OFDM)

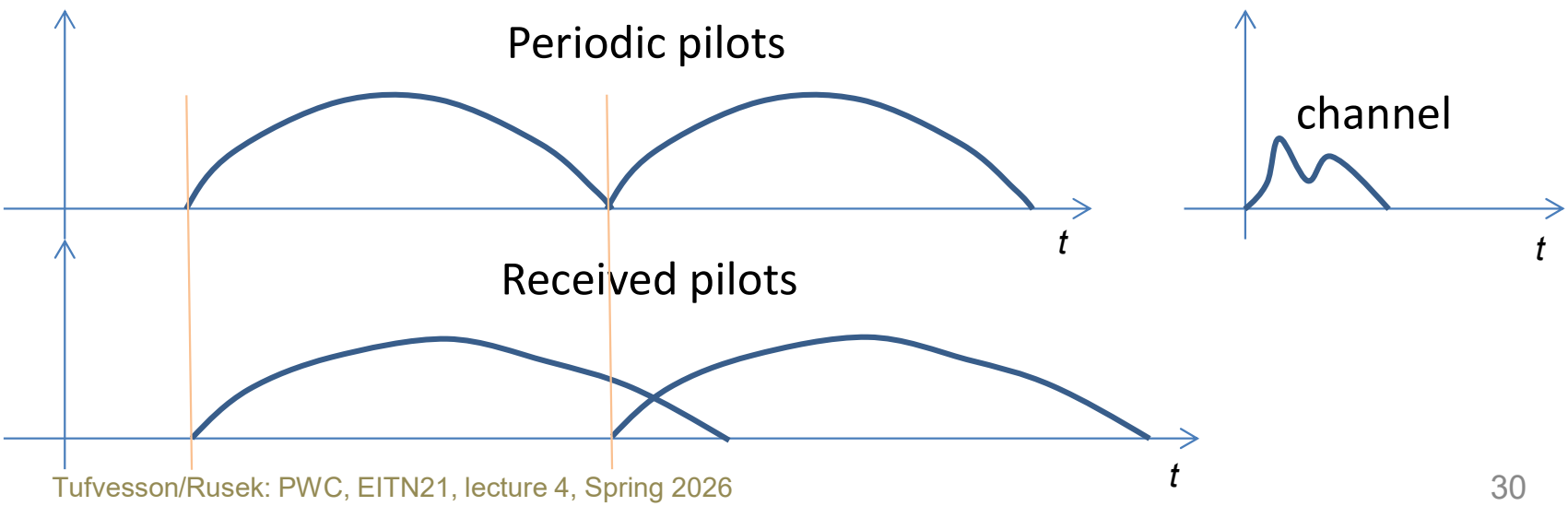

Periodic pilots in OFDM

Hence, the transmitted signal is periodic with period $N/2$.

In OFDM, the time between two outputs of the IFFT is short in comparison with the Channel.

But, the period of the pilots is $N/2$ such intervals, which is much longer than the duration of the channel (which is the key feature of OFDM)

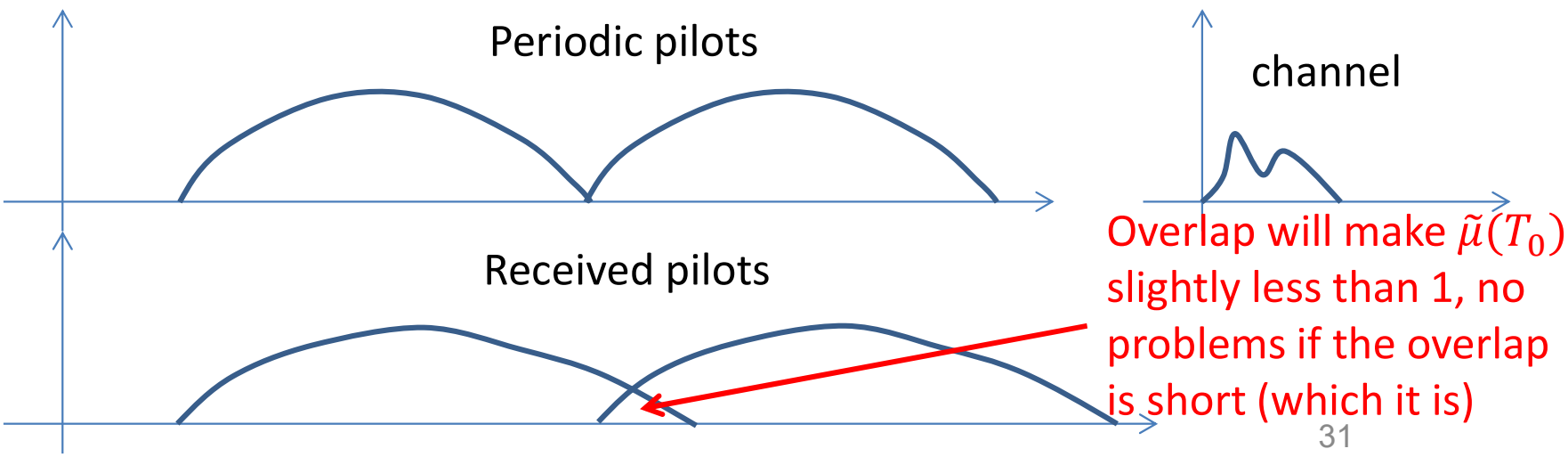

Periodic pilots in OFDM

Hence, the transmitted signal is periodic with period $N/2$.

In OFDM, the time between two outputs of the IFFT is short in comparison with the Channel.

But, the period of the pilots is $N/2$ such intervals, which is much longer than the duration of the channel (which is the key feature of OFDM)

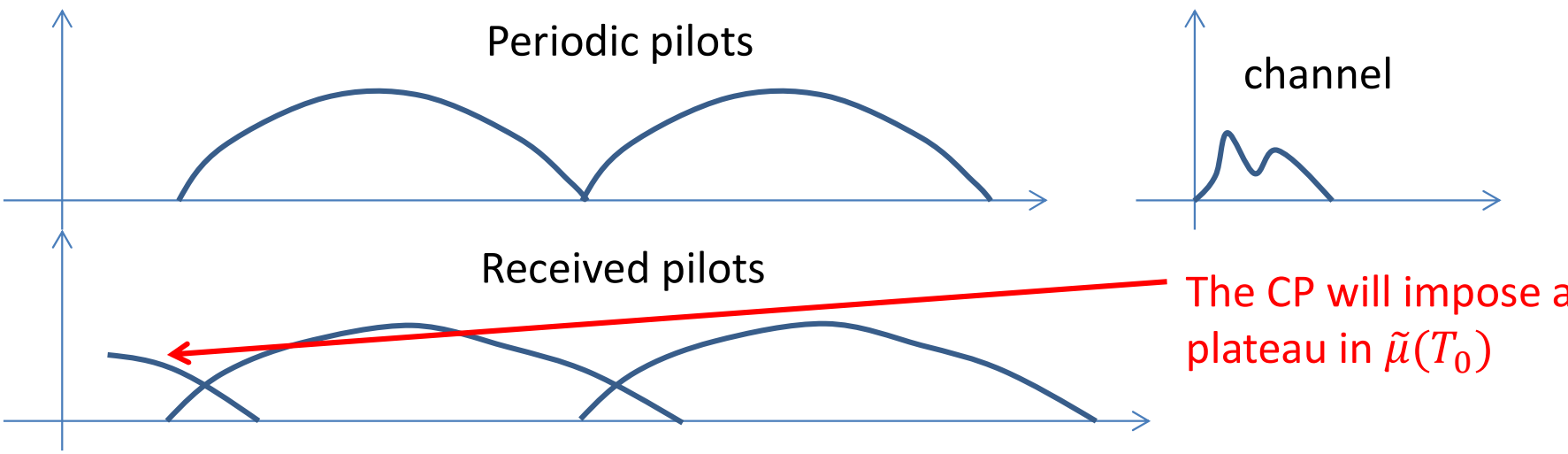

Mismatch in OFDM synchronization

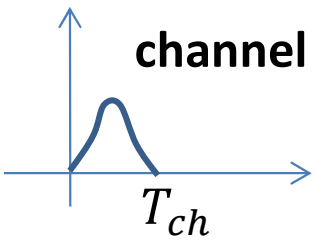

Structure of the OFDM signal

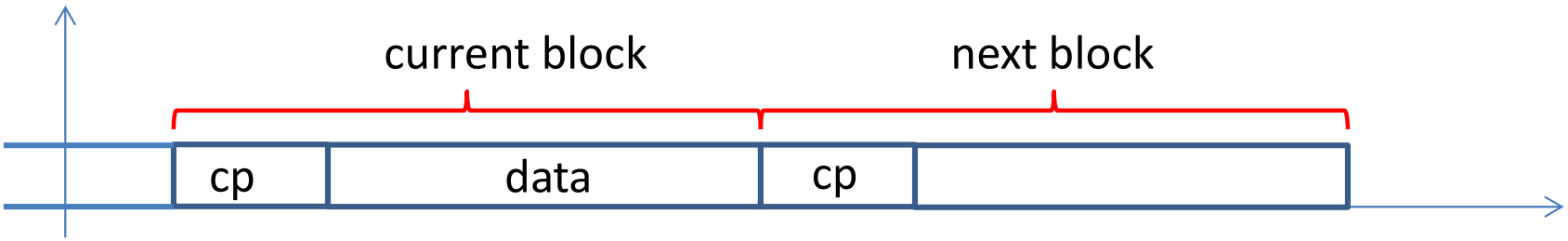

Shaded part only depends on the current block

Structure of the OFDM signal after channel

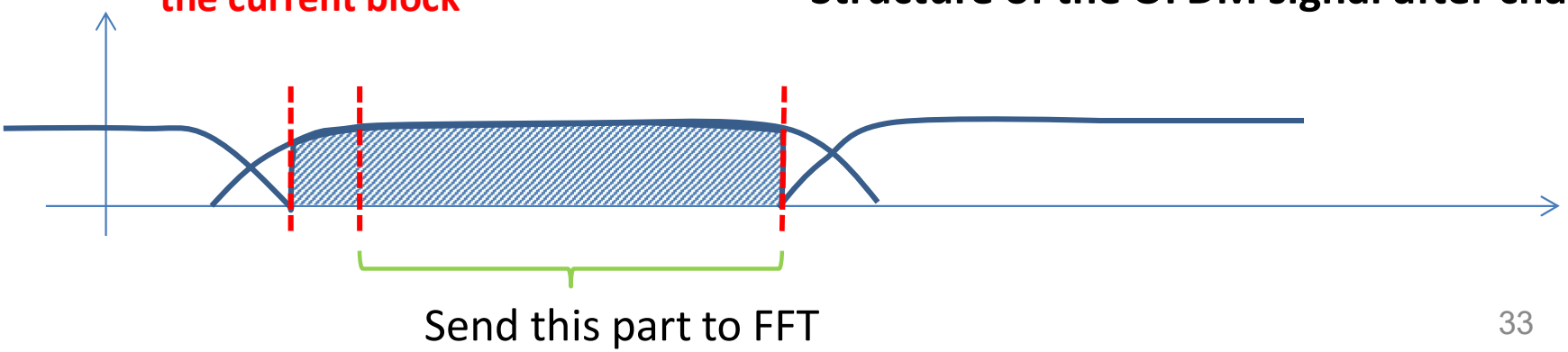

Mismatch in OFDM synchronization

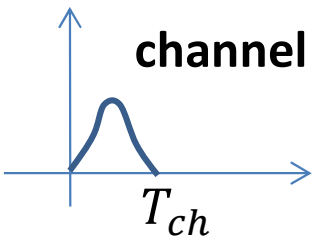

Structure of the OFDM signal

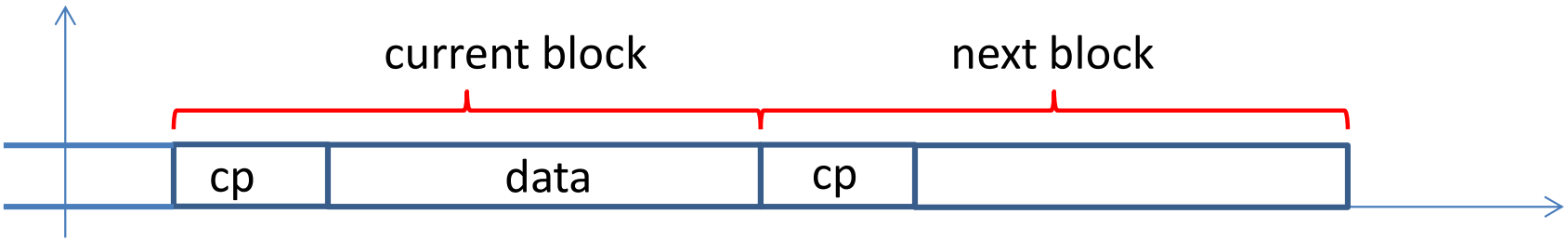

Shaded part only depends on the current block

Structure of the OFDM signal after channel

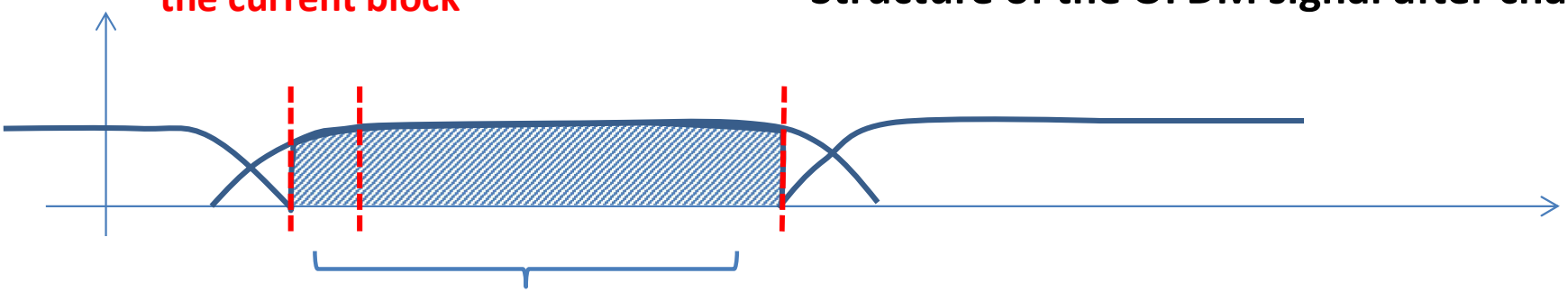

What happens if we send this part to the IFFT? (error in the synchronization)

Mismatch in OFDM synchronization

Example: CP length=3. Channel memory=1 symbol

One transmitted block after IFFT and insertion of CP

$$[\ x_{N-3}\ x_{N-2}\ x_{N-1} \mid x_0\ x_1\ x_2\ \ldots\ldots x_{N-3}\ x_{N-2}\ x_{N-1}\ ]$$

Received block after convolution with channel

$$[\ r_{-3}\ r_{-2}\ r_{-1} \mid r_0\ r_1\ r_2\ \ldots\ldots r_{N-3}\ r_{N-2}\ r_{N-1}\ ]$$

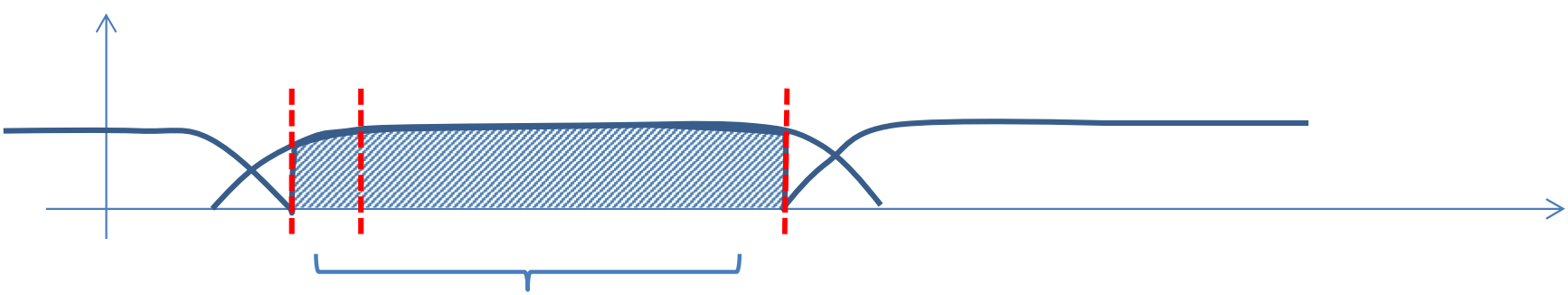

What happens if we send this part to the IFFT? (error in the synchronization)

Mismatch in OFDM synchronization

Example: CP length=3. Channel memory=1 symbol

One transmitted block after IFFT and insertion of CP

$$[\ x_{N-3}\ x_{N-2}\ x_{N-1} \mid x_0\ x_1\ x_2\ \ldots\ldots x_{N-3}\ x_{N-2}\ x_{N-1}\ ]$$

Received block after convolution with channel

$$[\ r_{-3}\ \ r_{-2}\ \ r_{-1} \mid r_0\ \ r_1\ \ r_2\ \ldots\ldots r_{N-3}\ r_{N-2}\ r_{N-1}\ ]$$

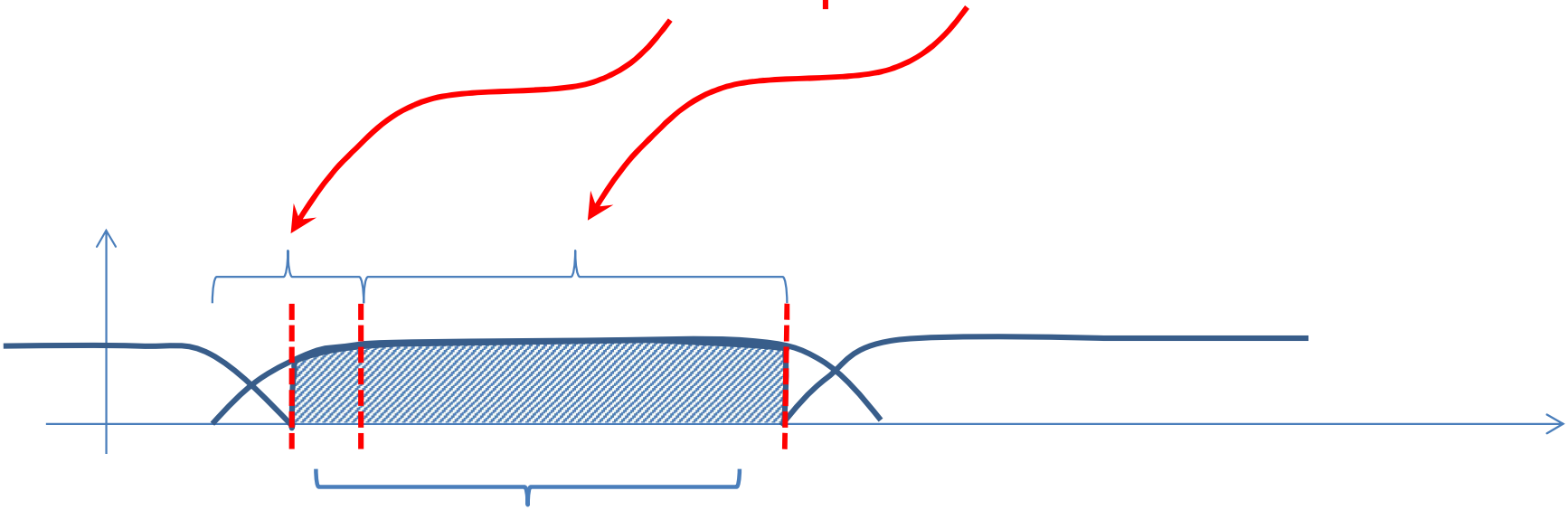

What happens if we send this part to the IFFT? (error in the synchronization)

Mismatch in OFDM synchronization

Example: CP length=3. Channel memory=1 symbol, **h**=[h_0 h_1]

One transmitted block after IFFT and insertion of CP

$$[\ x_{N-3}\ x_{N-2}\ x_{N-1} \mid x_0\ x_1\ x_2\ \ldots\ldots x_{N-3}\ x_{N-2}\ x_{N-1}\ ]$$

Received block after convolution with channel

$$[\ r_{-3}\ \ r_{-2}\ \ r_{-1} \mid r_0\ \ r_1\ \ r_2\ \ldots\ldots r_{N-3}\ r_{N-2}\ r_{N-1}\ ]$$

$$r_{N-1} = h_0 x_{N-1} + h_1 x_{N-2} = r_{-1}$$

$$r_{N-2} = h_0 x_{N-2} + h_1 x_{N-3} = r_{-2}$$

$$\boldsymbol{r_{N-3} = h_0 x_{N-3} + h_1 x_{N-4} \neq r_{-3}}$$

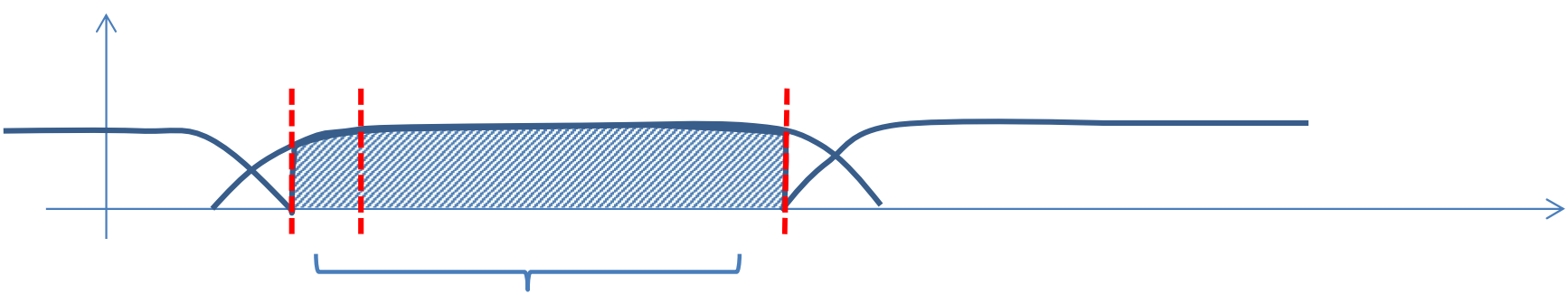

What happens if we send this part to the IFFT? (error in the synchronization)

Mismatch in OFDM synchronization

Example: CP length=3. Channel memory=1 symbol, **h**=[h_0 h_1]

One transmitted block after IFFT and insertion of CP

$$[\ x_{N-3}\ x_{N-2}\ x_{N-1} \mid x_0\ x_1\ x_2\ \ldots\ldots x_{N-3}\ x_{N-2}\ x_{N-1}\ ]$$

Received block after convolution with channel

$$[\ r_{-3}\ \ r_{-2}\ \ r_{-1} \mid r_0\ \ r_1\ \ r_2\ \ldots\ldots r_{N-3}\ r_{N-2}\ r_{N-1}\ ]$$

$$r_{N-1} = h_0 x_{N-1} + h_1 x_{N-2} = r_{-1}$$

$$r_{N-2} = h_0 x_{N-2} + h_1 x_{N-3} = r_{-2}$$

$$\boldsymbol{r_{N-3} = h_0 x_{N-3} + h_1 x_{N-4} \neq r_{-3}}$$

So, the last 2 samples of the received block are ***cyclic***

$$[\ r_{-3}\ \ r_{-2}\ \ r_{-1} \mid r_0\ \ r_1\ \ r_2\ \ldots\ldots r_{N-3}\ r_{N-2}\ r_{N-1}\ ]$$

LUND UNIVERSITY

Mismatch in OFDM synchronization

Example: CP length=3. Channel memory=1 symbol, **h**=[h_0 h_1]

$$[r_{N-2}\ r_{N-1}\ r_0\ r_1\ r_2\ .....r_{N-3}\ r_{N-2}\ r_{N-1}]$$

Let r[n]=[r_0 r_1 r_2 .....r_{N-3} r_{N-2} r_{N-1}] be the ideal symbols to be sent to the FFT

Let r_s[n] =[r_{N-s} ...r_{N-1} r_0 r_1 r_2 .....r_{N-s-1}] be the symbols sent to the FFT if there is ***s*** symbols synchronization error

$$r_s[n] = r[(n-s) mod\ N]$$

Take the FFT of r_s[n]

$$r_s[n] = r[(n-s) mod\ N] \underset{FFT}{\longleftrightarrow} R_s(k) = R(k)\exp\left(-\frac{j2\pi sk}{N}\right), k = 0 \dots N-1$$

So the output of the FFT can be written as

$$R_s(k) = a_k H_k \exp\left(-\frac{j2\pi sk}{N}\right)$$

Whether one estimates H_k or $H_k\ exp\left(-\frac{j2\pi sk}{N}\right)$ is irrelevant

Summary: Mismatch in OFDM synchronization

- If you estimate the start of the OFDM block to be later than what it really is, there will be problems as parts of the data is lost
- If you estimate the start earlier than what it ireally is, there will be no problems if the mismatch s is smaller than the CP-duration minus the length of the channel

LUND UNIVERSITY

A little side note

What happens if you set all input symbols ($a_0, a_1, \ldots, a_{N-1}$) to 1 (or all a_l to -1)?

($x_0, x_1, \ldots, x_{N-1}$) are formed by applying the IFFT.

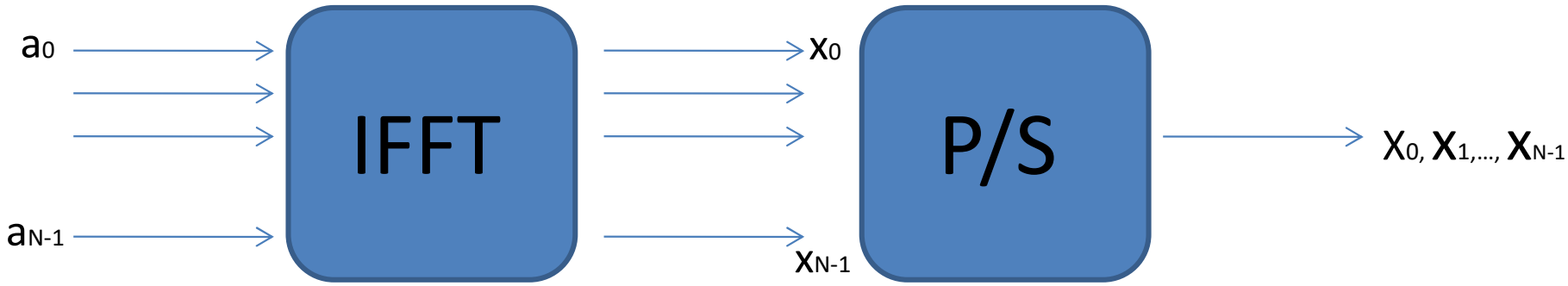

Mathematically we have

$$x_k = \frac{1}{N} \sum_{l=0}^{N-1} a_l \exp(i2\pi lk/N)$$

Convolutional codes

A little coding: Binary symmetric channels

The Tx-Rx chain

Channel inputs -> pulse shaping -> carrier modulation -> channel -> carrier demodulation -> synchronization -> matched filter -> sampling -> bit decision

Can be modeled with the binary symmetric channel (BSC) model

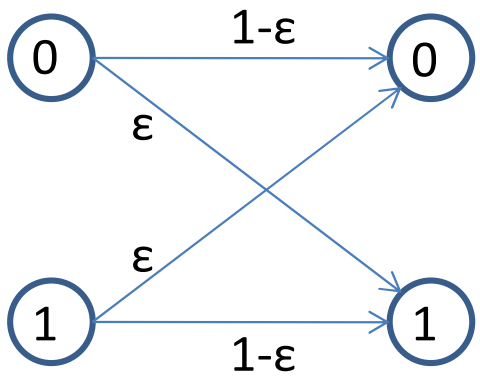

A bit is erroneously decoded with probability ε

Coded Transmission

If the transmitted bits are not protected, a fraction ε will be incorrectly decoded. The probability ε may be large, which jeopardize the system.

What is the simplest possible countermeasure?

In my opinion, it is to send each data symbol twice.

Data symbol	Transmitted symbols
0	00
1	11

However, this doesn't work. What should the decoder do if he receives 01?

Must be at least of length 3:

Data symbol	Transmitted symbols
0	000
1	111

LUND UNIVERSITY

Repetition codes

This is examples of repetition codes of rate R=1/n, n being the number of transmitted symbols per information symbol, i.e. n=2 and 3 on the last slide. Obviously, repetition codes are not very efficient. But they are simple enough so that exact expressions for the bit error rate can be derived. This shows that coding does indeed improve system performance.

With n=3, what is the probability that the receiver decodes incorrectly?

Say that 0 is transmitted, we get

Received	decoded	correct
000	0	Yes
001	0	Yes
010	0	Yes
011	1	No
100	0	Yes
101	1	No
110	1	No
111	1	No

Repetition codes

Hence, we decode correctly if and only if there are less than two errors on the channel.

$$\Pr((\hat{u} \neq u)) = \Pr((2 \; or \; 3 \; errors \; on \; channel)) = 3\varepsilon^2(1-\varepsilon) + \varepsilon^3$$

$$= 3\varepsilon^2 - 2\varepsilon^3 \approx 3\varepsilon^2$$

Now put in some numbers: Say that ε=.001, then the error probability is reduced down to .000003. This is a significant improvement of the system reliability!

However, the code rate, definied as the number of information bits per code bit is R=1/3. Can we do better?

Yes, with convolutional codes!

Convolutional Codes

We only look at rate R=½ codes, i.e. two outputs per information bit.

The structure of a convolutional code is

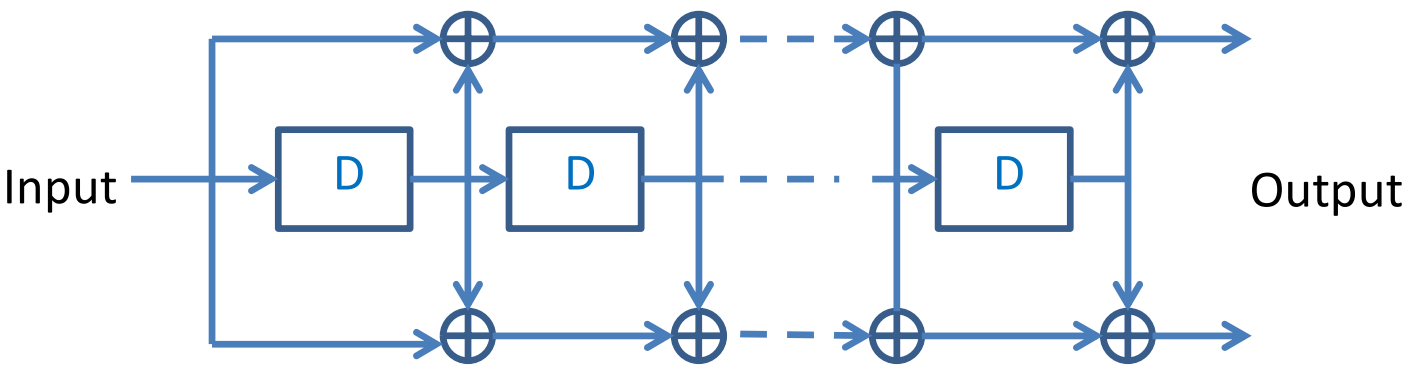

Two parameters (except for the rate R) specify the code completely:

The constraint length ν= # D-elements +1

Code generators: Specification of the connections

Code Generators

Not all connections may be activated:

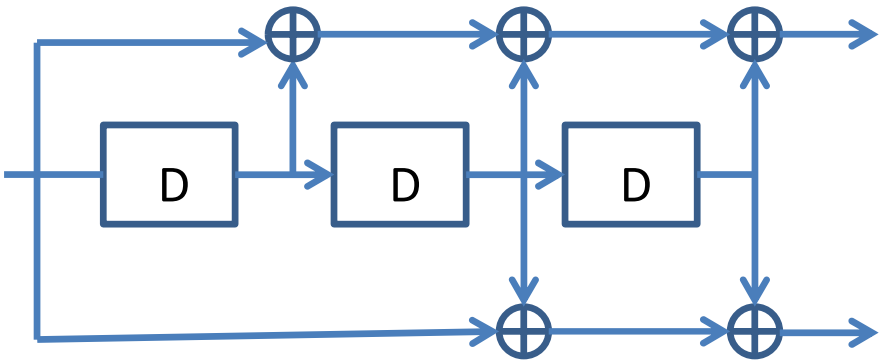

How should we give this machine a name?
Represent an activated/deactivated connections with 1/0
In the example above we get (from left to right): 1111
In the bottom we get: 1011
This is represented in octal notation, and we pad with zeros from the left in order to get a multiple of 3

00 1111	→	001 111	→	17
00 1011		001 011		13

And the name is (17,13), with constraint length 4

The (7,5) code

This has the name (7,5), constraint length 3 code

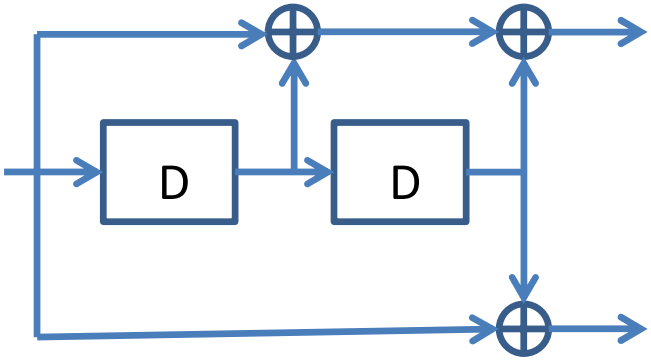

This is one of the most researched codes that exists.

Conventions

At the beginning of the encoding, it is assumed that the content in all the D-elements is 0.

It is also assumed that when all bits have been encoded, then the content of all the D-elements should be 0. This is achieved by concatenating ν-1 zeros at the end of information block.

If the data bits

010010110 …….100100

are to be transmitted by a ν=6 code, then one appends 5 zeros at the end so that the transmitted bits become

010010110 …….100100 | 00000

Error probability

To derive the error probability of a convolutional code is much tougher than for a repetition code.

But the performance is very good.

A convolutional code with R=1/2 and with constraint length 3-6, is much better than the R=1/3 repetition code.

Decoding is done via the Viterbi Algorithm: complexity is exponential in the constraint length

Conv codes in Matlab

You do not have to implement any convolutional decoder yourself

In Matlab, we can use vitdec.m

```
decoded = vitdec(code,trellis,tblen,opmode,dectype)
decodes the vector code using the Viterbi algorithm. The
MATLAB structure trellis specifies the convolutional
encoder that produced code;
```

LUND
UNIVERSITY