THIS DOCUMENT AND THE DATA DISCLOSED HEREIN OR HEREWITH IS THE PROPERTY OF ALTIUM LIMITED AND MAY BE FREELY DISTRIBUTED IN WHOLE. NO RIGHTS ARE RESERVED OR EXPRESS OR IMPLIED WARANTEE GIVEN.

REVISION	DESCRIPTION	DATE	APPROVED

5V ->3.3V MAX 1A

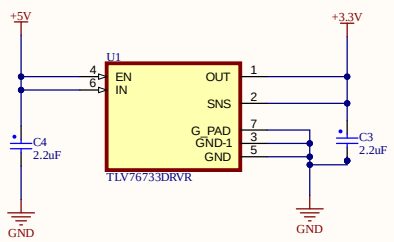

BOOT

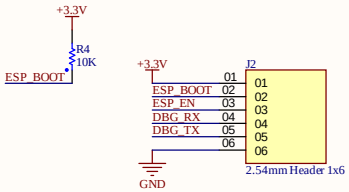

BUZZER

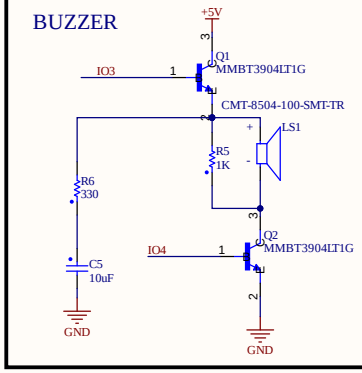

ESP

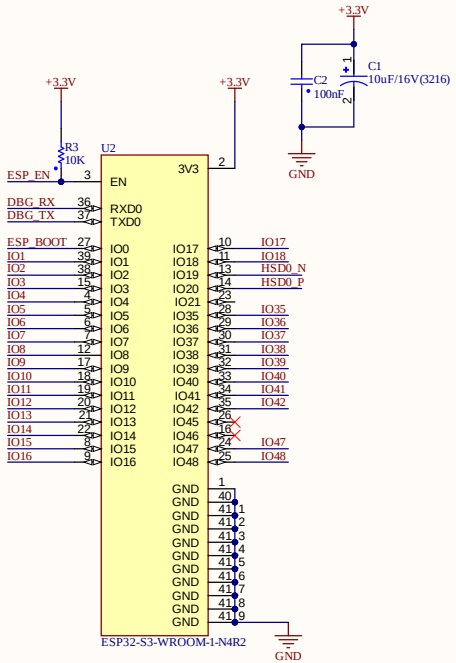

DBG USB PORT

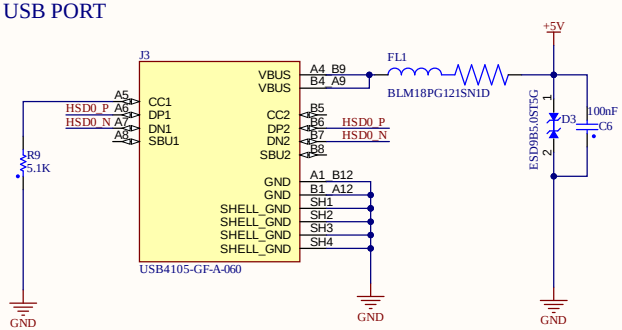

MIC

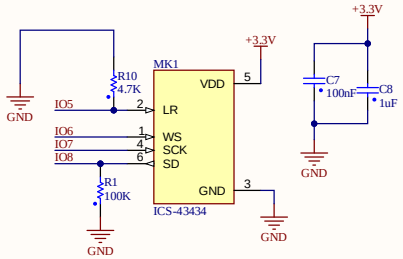

LED

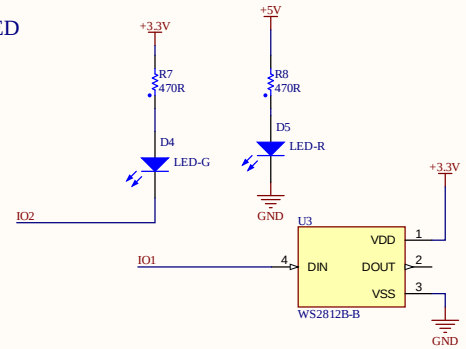

I2C /TEMP/ HUMI

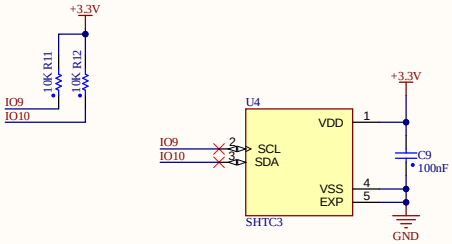

5V 배터리 입력

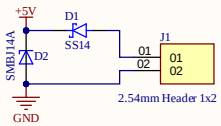

APPROVALS	DATE
ENG: *	
DSN: *	
CHK: *	
REFERENCE DOCUMENTS	
BOM:	
ASSY DWG:	
FAB DWG:	
PCB DWG:	

PROJECT: Altium

PROJECT REVISION: Not in version control | DOCUMENT REVISION: Not in version control | DESIGN ITEM:

TITLE: *

SIZE: A3 | CAGE CODE | DWG NO. | REV

SCALE: | FILE NAME: IoT-Edge-Device-ESP32-1.SchDoc | SHEET 1 OF 2

THIS DOCUMENT AND THE DATA DISCLOSED HEREIN OR HEREWITH IS THE PROPERTY OF ALTIUM LIMITED AND MAY BE FREELY DISTRIBUTED IN WHOLE. NO RIGHTS ARE RESERVED OR EXPRESS OR IMPLIED WARANTEE GIVEN.

REVISION	DESCRIPTION	DATE	APPROVED

OLED

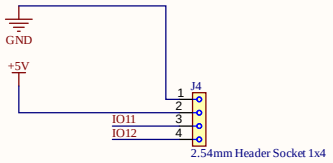

ANALOG

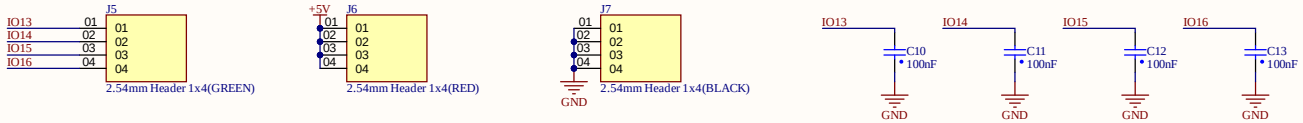

DIGITAL

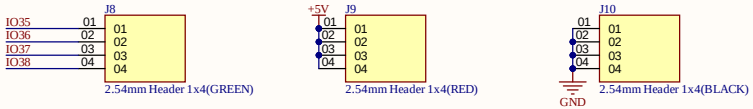

I2C

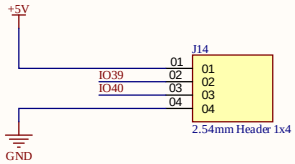

IMU

I2C/SPI

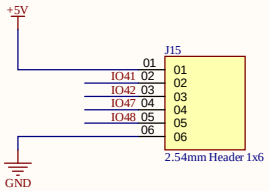

TOF

UART

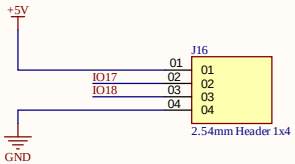

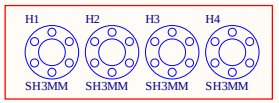

APPROVALS	DATE
ENG: *	
DSN: *	
CHK: *	
REFERENCE DOCUMENTS	
BOM:	
ASSY DWG:	
FAB DWG:	
PCB DWG:	

PROJECT

Altium

PROJECT REVISION: Not in version control

DOCUMENT REVISION: Not in version control

DESIGN ITEM:

TITLE *

SIZE A3 | CAGE CODE | DWG NO. | REV

SCALE: | FILE NAME IoT-Edge-Device-ESP32-2.SchDoc | SHEET 2 OF 2

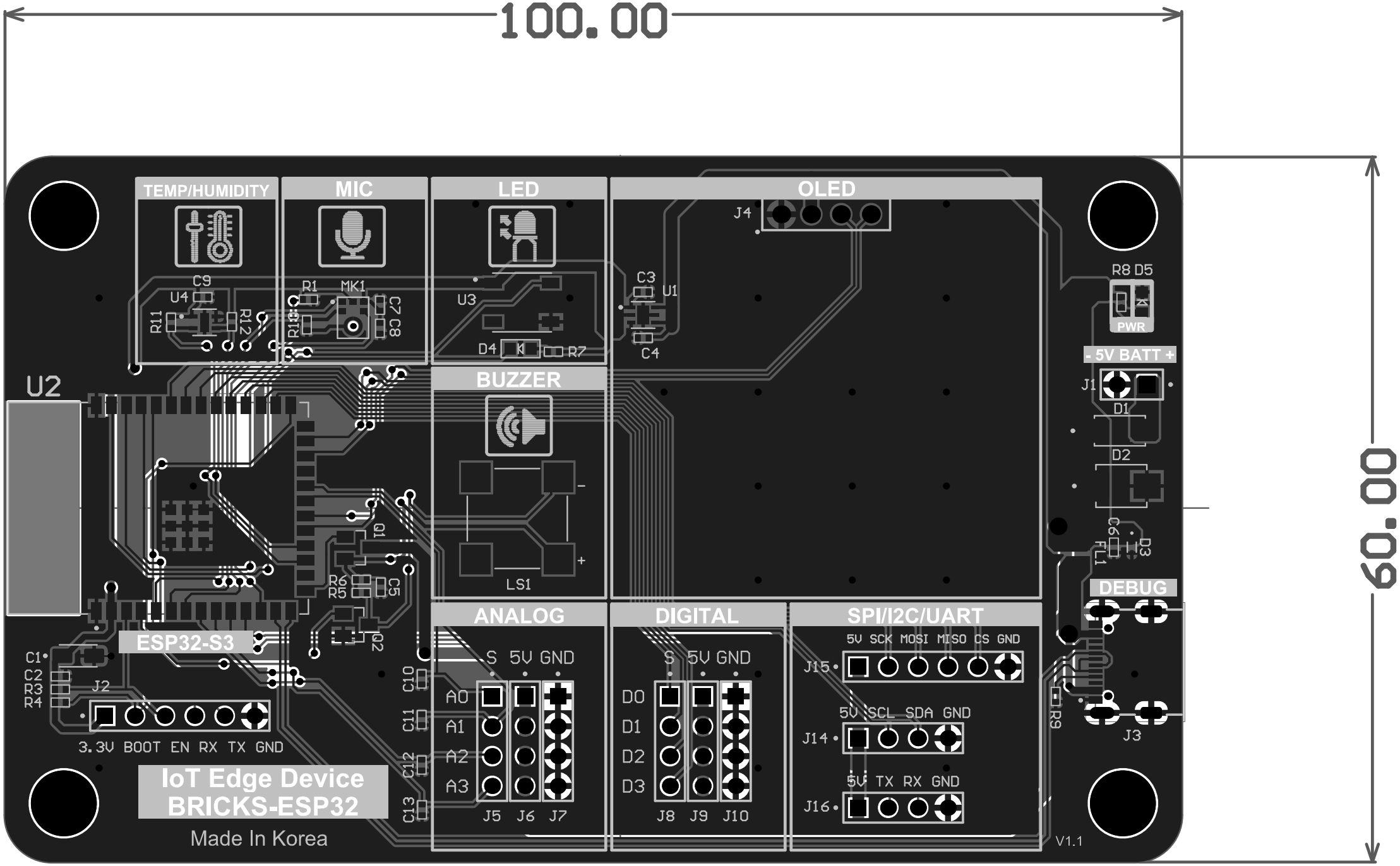
100.00
60.00
TEMP/HUMIDITY
MIC
LED
OLED
BUZZER
ANALOG
DIGITAL
SPI/I2C/UART
DEBUG
ESP32-S3
U2
J4
C3
U1
C4
U3
D4
R7
R1
MK1
C9
U4
R11
R12
R13
C7
C8
R8 D5
PWR
- 5V BATT +
J1
D1
D2
C6
FL1
D3
LS1
Q1
R6
R5
C5
Q2
C1
C2
R3
R4
J2
3.3V BOOT EN RX TX GND
C10
C11
C12
C13
S 5V GND
A0
A1
A2
A3
J5 J6 J7
D0
D1
D2
D3
J8 J9 J10
5V SCK MOSI MISO CS GND
J15
5V SCL SDA GND
J14
5V TX RX GND
J16
R9
J3
IoT Edge Device
BRICKS-ESP32
Made In Korea
V1.1