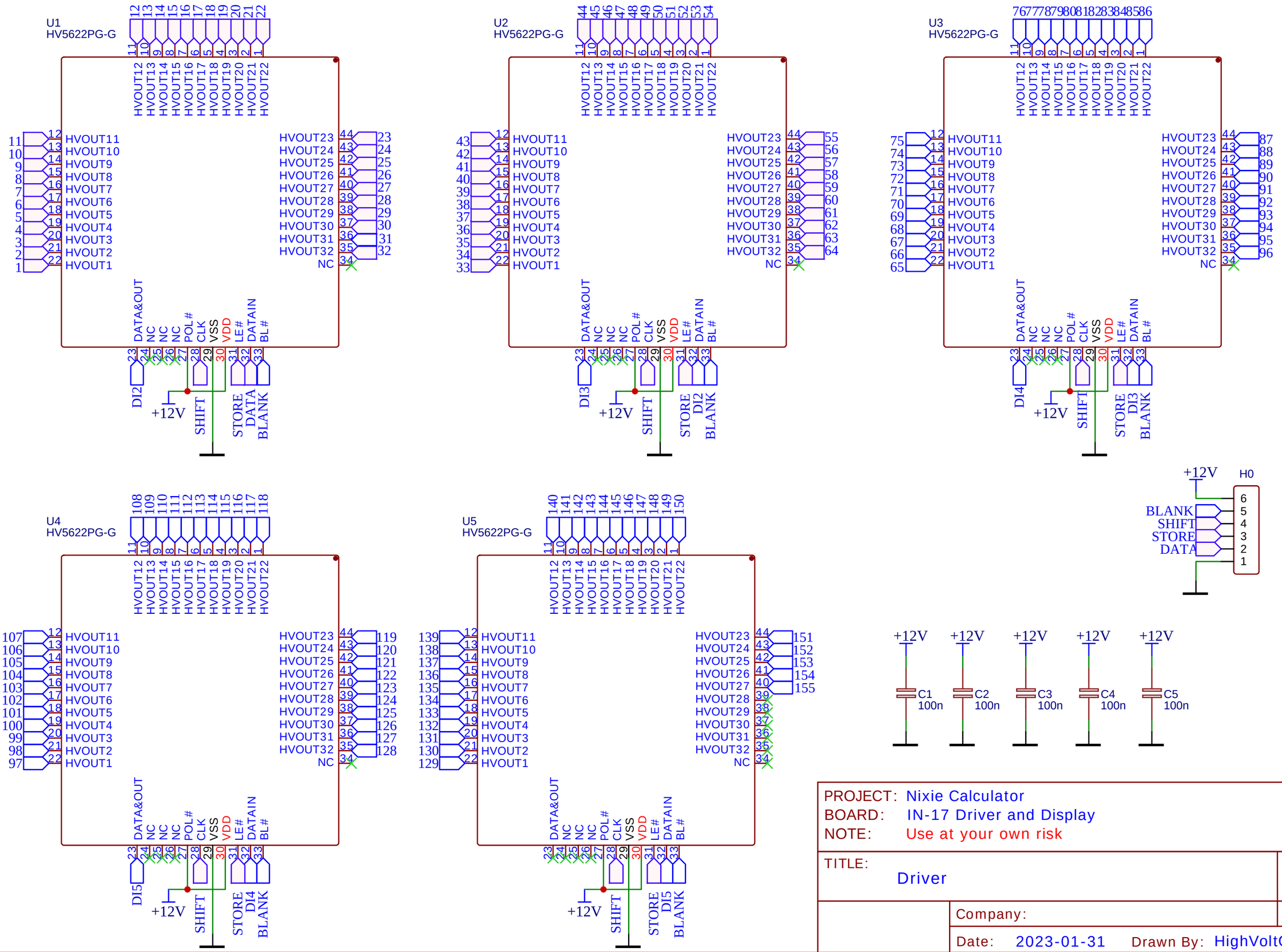

PROJECT: Nixie Calculator
BOARD: IN-17 Driver and Display
NOTE: Use at your own risk

TITLE: Driver

REV: 1

Company:

Sheet: 1/2

Date: 2023-01-31 Drawn By: HighVoltGlow

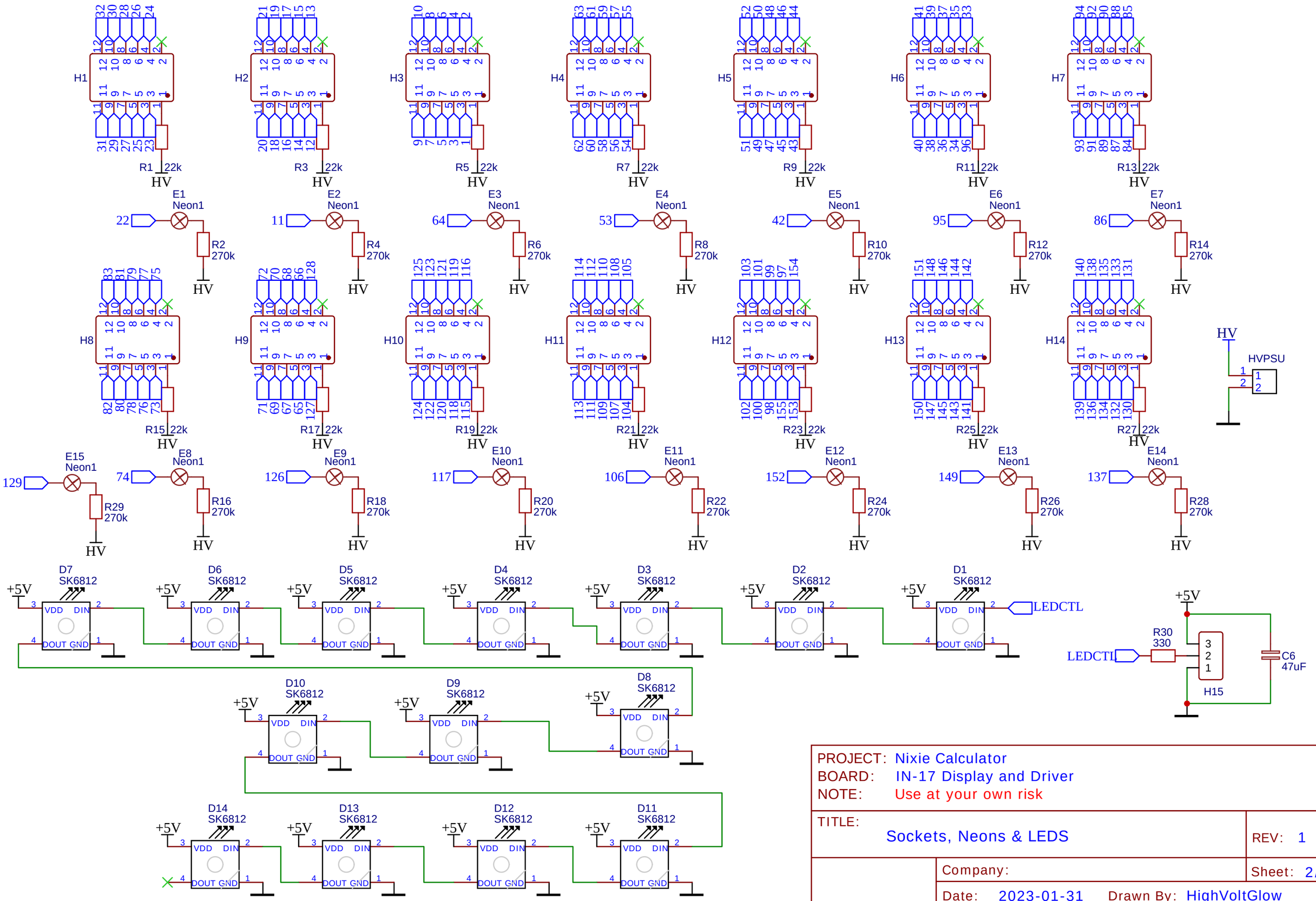

PROJECT: Nixie Calculator
BOARD: IN-17 Display and Driver
NOTE: Use at your own risk

TITLE: Sockets, Neons & LEDS

REV: 1

Company:

Sheet: 2/2

Date: 2023-01-31 Drawn By: HighVoltGlow