The University of Jordan

Embedded Systems Lab

Spring 2024

Project: Smart Fan System

Group Size	Grading	Due Date
3-4 Students	20 Points	**Saturday 25/05/2024** **Before 00:00**

Project Details and Description

The economical smart fan system, is a fan which automatically adjusts its RPM speed depending on the number of objects (in this project, people) in a room. The fan's speed is initially zero, and it increases linearly as a function of the number of objects in the room. The maximum speed is reached when the number of objects in the room (N) is a equal to a maximum value of objects (N_max).

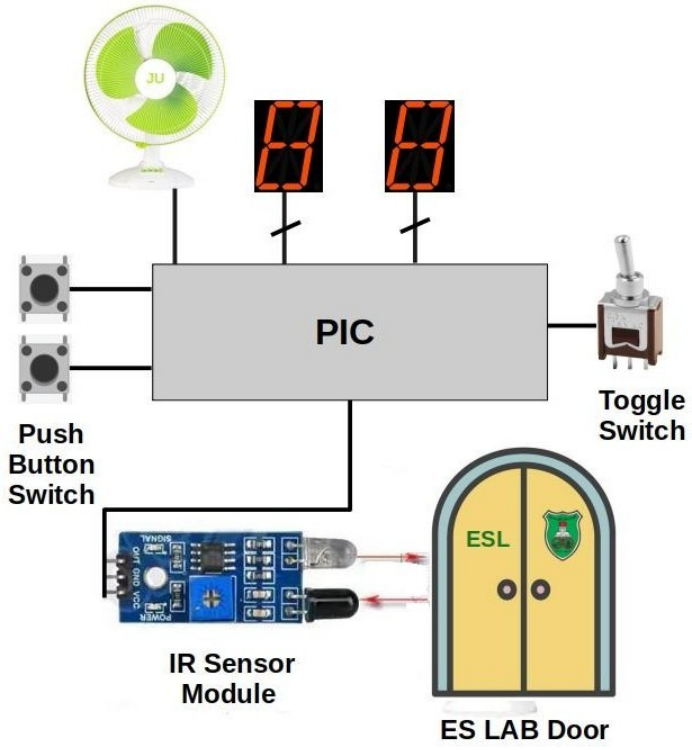

Figure 1: general setup.

An infra red (IR) sensor should be installed on the room's door and connected to the PIC microcontroller – see Figure 1. Once a person traverses the entrance (i.e. enters the room through its door) the IR sensor detects this event and signals it to the PIC microcontroller. The basic idea of IR object detection is illustrated in Figure 2. Once the PIC microcontroller detects an object, an object counter is incremented (i.e. N ← N+1). The speed of the motor which is already connected to the PIC microcontroller is then increased by an amount linearly proportional to the the count value.

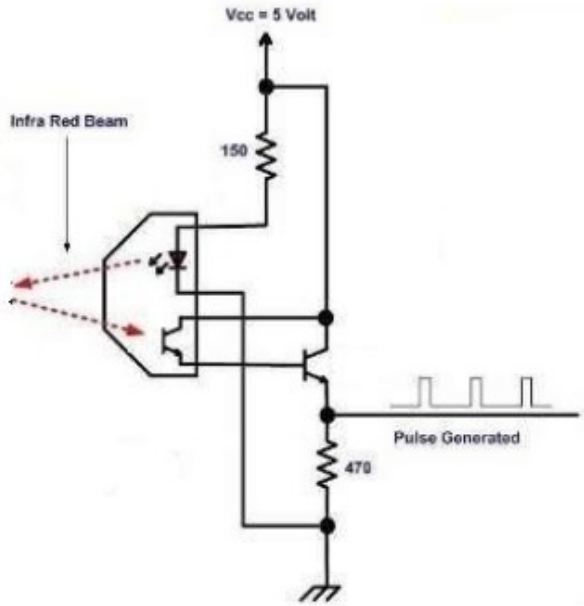

Figure 2: basic idea of IR object detection.

Specifically, the speed of fan's D.C. motor is controlled via Pulse Width Modulation (PWM) according to the following equation:

$$D = N / N_max, \qquad (N <= N_max) \qquad \ldots \quad (1),$$

where,

D: is the duty cycle of the PWM signal (0% -- 100%).

N: number of objects in the room.

N_max: maximum number of objects in the room.

The average PWM voltage (V_avg) applied to the D.C. motor is in the range of [0, Vs] and is specified according to equation (2):

$$V_avg = D \times Vs \qquad \ldots \quad (2),$$

The circuit has a toggle switch. When the toggle switch is logic 0, the count value (N) is displayed on two seven-segment displays and two push-button switches are used to modify the current speed of the motor (UP and DOWN) if needed. When the toggle switch is logic 1, the maximum number of objects in

the room (N_max) is displayed on the two seven-segment displays and the two push-button switches are used to modify the sensitivity of the fan (i.e., increase/decrease the value of N_max).

In this project, you are required to implement the functionality when the toggle switch is logic 0. This is a **mandatory** part of this project. Implementing the functionality when the toggle switch is logic 1 is **optional** and is considered as **bonus**.

Design and Development

For this project, you are required to design, implement and test the system in simulation using MPALB and Proteus, and then build the **hardware prototype for the system**. For the software part, you need to **program in assembly**, and you are encouraged to maximize the use of interrupts, subroutines and hardware timers in your design. Make sure to include detailed explanation for your design and all the calculations that you do.

Project Groups

You must form groups of **three to four** students to work on this project. We prefer that you form groups from within your own lab session, but if you cannot find a partner, then you can form a group with colleagues from the other sessions. Please fill in the names of your team members using the following Google form by **DD/MM/YYYY**. **One form is required for each group. For those who don't fill the form, they will be grouped randomly with each other.**

[Google Form Link]

WE ARE NOT RESPONSIBLE IF YOU CANNOT FIND PARTNERS, OR IF YOUR PARTNER IS NOT GIVING ENOUGH EFFORT, OR DROPS THE COURSE!

Important Notes

- **Start as early as possible** on your project, though the project description sounds simple, there is inherent complexity in both hardware and software aspects, so do not underestimate the time it needs, you will have many problems along the way which you will have to resolve!
- **Never think of buying a model or commissioning someone to do it for you**, not only will you get a zero in the project, but also your act will be considered as a direct violation to JU laws and your actions shall be reported as cheating in the final exam!
- **Code sharing** between groups is NOT allowed and leads to 0 points.
- If you acquire a ***part*** of your software from a book, website, etc, then kindly reference it properly, else it will be considered as plagiarism.
- You are only allowed to base your project on ***PIC16F84A or PIC16F877A***.

- You are free to use any material to build the model and the holding structure of the hardware devices you use. You might use LEGO parts, wood, strengthened cartoon, or even metallic components.
- All programming must be done in **PIC ASSEMBLY** language only; using high-level programming languages in this project will get you a zero.
- Your submitted work must be professional:
    - **Hardware**: you are submitting a product, all electrical and electronic components must be hidden from the user, only user-accessed components are visible. Hide the wiring, be neat. ***Still, the instructor should be able to easily examine the internal components at the time of discussion when required.***
    - **Software**: your work should be fully documented, all inputs/outputs should be listed, and each sub-routine/macro should be fully documented. Use functional comments> Refer to the last section in Experiment 2 regarding documentation.
- Divide the work such that each student is responsible for a specific task, **YET EVERY** student is required to answer for **ANY QUESTIONS** in relation to any submitted work of the project.

Report Guidelines

You should submit a report and it should contain the following parts:

- **Introduction.** In this section, you give a brief description of the overall project in your own technical language.

- **System Description.** Here you give a detailed description of the system design and how it was decomposed into subsystems.

- **Hardware System.** Here you must explain and elaborate on your system hardware design, its inputs and outputs. Present a clear and professional circuit design schematic. **Justify why you configured and initialized your system and modules in this way.**

- **System Testing and Results.** Present the complete methodology which you have undertaken to perform unit testing, system integration, and the final overall test. You must present the test cases which you have used to test your system for correct functionality. You must justify the choices for your test cases and whether or not they cover all possible regions of operation of your system. Provide technical discussion of the results or any abnormal operation you have witnessed during testing. **See the grading sheet for more details**

- **Conclusion.** Give a short summary of the project, your work, and the steps you have undertaken during the design process. Furthermore, you must clearly state the contribution of each student in the project. Discuss the major obstacles that you faced during the design process.

Submission

For this project, you need to submit a single compressed file that contains a detailed report of your system and the MPLAB and Proteus files through MS Teams before 00:00 of Day 25/05/2024. An assignment will be created for this purpose.

Each team are required to attend a discussion session in which they submit a hard-copy of the report and present the hardware prototype for their system, and be ready to answer questions and demonstrate their system to the lab engineer to during the week of 25/05/2024. The discussion schedule will be announced later.