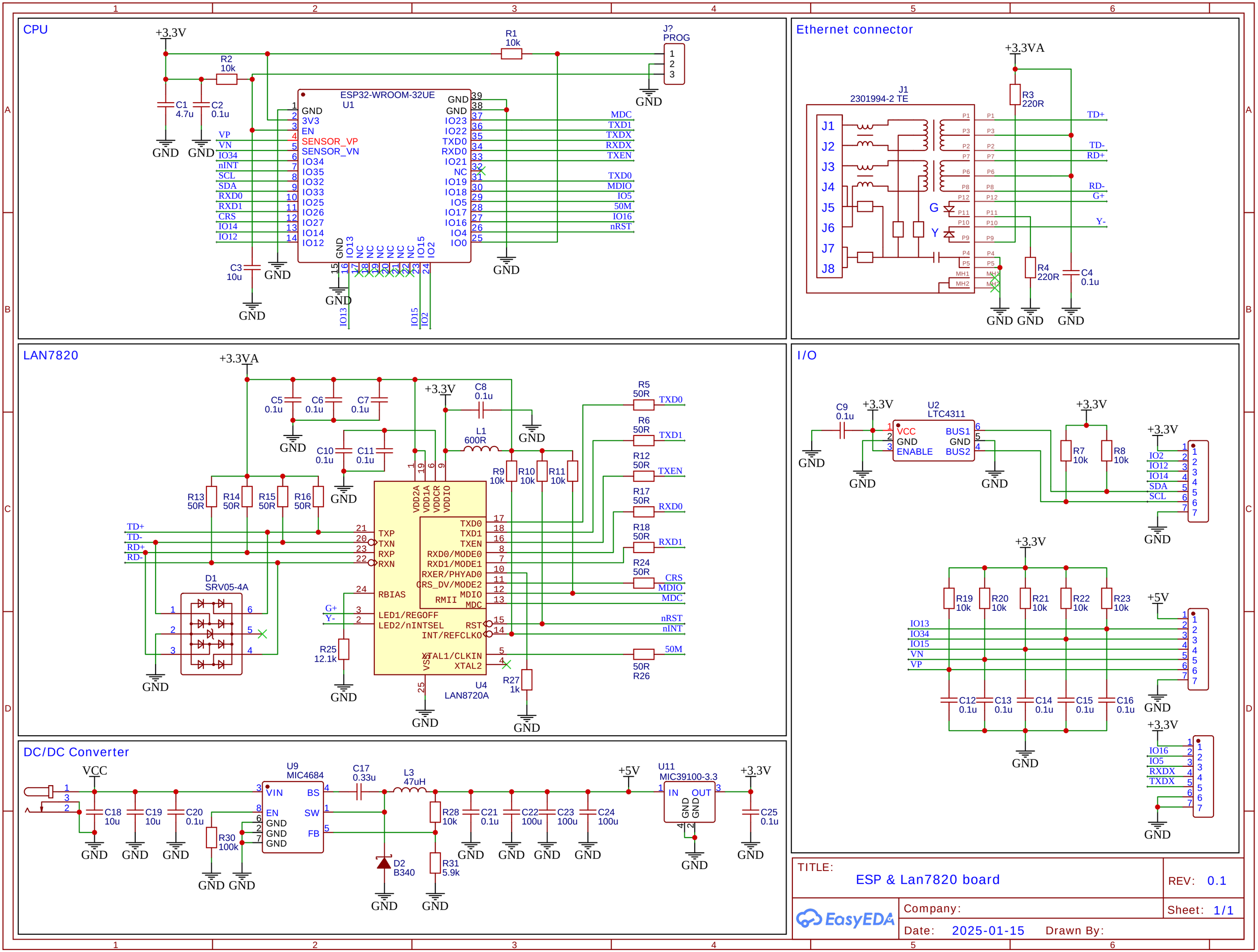
CPU
ESP32-WROOM-32UE
U1
+3.3V
R1 10k
R2 10k
C1 4.7u
C2 0.1u
C3 10u
J? PROG
GND
VP
VN
IO34
nINT
SCL
SDA
RXD0
RXD1
CRS
IO14
IO12
MDC
TXD1
TXDX
RXDX
TXEN
TXD0
MDIO
IO5
50M
IO16
nRST
Ethernet connector
+3.3VA
J1 2301994-2 TE
R3 220R
R4 220R
C4 0.1u
TD+
TD-
RD+
RD-
G+
Y-
LAN7820
C5 0.1u
C6 0.1u
C7 0.1u
C8 0.1u
C10 0.1u
C11 0.1u
L1 600R
R9 10k
R10 10k
R11 10k
R13 50R
R14 50R
R15 50R
R16 50R
R5 50R
R6 50R
R12 50R
R17 50R
R18 50R
R24 50R
R26 50R
D1 SRV05-4A
R25 12.1k
R27 1k
U4 LAN8720A
VDD2A
VDD1A
VDDCR
VDDIO
TXP
TXN
RXP
RXN
RBIAS
LED1/REGOFF
LED2/nINTSEL
INT/REFCLKO
XTAL1/CLKIN
XTAL2
RXD0/MODE0
RXD1/MODE1
RXER/PHYAD0
CRS_DV/MODE2
RMII
I/O
C9 0.1u
U2 LTC4311
VCC
ENABLE
BUS1
BUS2
R7 10k
R8 10k
+5V
R19 10k
R20 10k
R21 10k
R22 10k
R23 10k
C12 0.1u
C13 0.1u
C14 0.1u
C15 0.1u
C16 0.1u
DC/DC Converter
VCC
C18 10u
C19 10u
C20 0.1u
R30 100k
U9 MIC4684
VIN
EN
BS
SW
FB
C17 0.33u
L3 47uH
D2 B340
R28 10k
R31 5.9k
C21 0.1u
C22 100u
C23 100u
C24 100u
U11 MIC39100-3.3
IN
OUT
C25 0.1u
TITLE:
ESP & Lan7820 board
REV: 0.1
Company:
Sheet: 1/1
Date: 2025-01-15
Drawn By:
EasyEDA