LESSON 15: MEMORY DEVICES

TOPIC OVERVIEW

A. MEMORY TERMINOLOGY
B. GENERAL MEMORY OPERATION
C. CPU MEMORY CONNECTIONS
D. READ ONLY MEMORIES
E. ROM ARCHITECTURE
F. ROM TIMING
G. TYPES OF ROMS
   a. Compact Disc (CD ROM)
   b. Standardized Disc Format
   c. Disc Capacity
   d. CD/DVD Types and Names
   e. Device Compatibility
   f. Usage of Disc Types
H. FLASH MEMORY
I. ROM APPLICATIONS
J. SEMICONDUCTOR RAM
K. RAM ARCHITECTURE
L. STATIC RAM (SRAM)
M. DYNAMIC RAM (DRAM)
N. DYNAMIC RAM STRUCTURE AND OPERATION
O. DRAM READ/WRITE CYCLES
P. DRAM REFRESHING
Q. DRAM TECHNOLOGY
   a. Memory Modules
R. OTHER MEMORY TECHNIQUES
S. EXPANDING WORD SIZE AND CAPACITY
T. SPECIAL MEMORY FUNCTIONS
U. TROUBLESHOOTING RAM SYSTEMS
V. TESTING ROM

A MEMORY TERMINOLOGY

DIGITAL DATA

- can be stored as **charges** on **capacitors**.
  - An important **semiconductor memory type** does this for **high-density storage**, at **low power-requirements**.

SEMICONDUCTOR MEMORIES

- are used as the **main memory** of a computer where **fast operation** is important.
- A computer's **main memory**—its **working memory**—is in **constant communication** with the central processing unit **(CPU)** as a program of instructions is executed.
- **RAM** and **ROM** make up main memory.

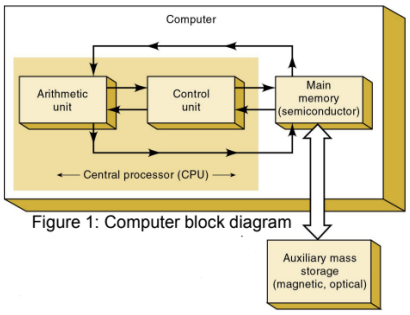

Figure 1: Computer block diagram

AUXILIARY MEMORY

- Also called **mass storage**—it has the capacity to store massive amounts of data **without need for power**.
- Common auxiliary memory devices are **magnetic disk** and **compact disc** (CD), accessed **optically**.

MEMORY CELL

- A device or an electrical circuit used to **store a single bit (0 or 1)**.
  - *Examples include a flip-flop, charged capacitor, or a single spot on magnetic tape or disk.*

MEMORY WORD

- A **group of bits** (**cells**) in a memory that represents **instructions** or **data**.
  - *Word sizes in computers typically range from **8 to 64 bits**, depending on the size of the computer.*

BYTE

- A special term used for a **group of eight bits**.
  - *Always consists of eight bits.*

CAPACITY

- A way of **specifying how many bits** can be **stored** in a memory device or system.

DENSITY

- Another term for **capacity**.
  - A memory device with **greater density** can **store more bits** in a given amount of space.

ADDRESS

- A **number** that identifies the **location** of a word in memory.
  - Addresses always exist in a digital system as a **binary**

number, although **octal, hex & decimal** numbers are often used to represent the address for convenience.

A small memory consisting of eight words.

Each of these eight words has a specific address represented as a three-bit number—from 000 to 111.

To refer to a specific word location in memory, use its address code to identify it.

Addresses	
000	Word 0
001	Word 1
010	Word 2
011	Word 3
100	Word 4
101	Word 5
110	Word 6
111	Word 7

Figure 3: Small Memory

READ OPERATION

- The **binary word stored** in a specific memory location (address) is **sensed** and then **transferred** to another device.
  - Often called a **fetch operation** because a word is being **fetched from memory**.

WRITE OPERATION

- Operation whereby a **new word** is **placed** into a **particular memory location**.
  - Also referred to as a **store operation**, it **replaces** the word that was previously stored there.

ACCESS TIME

- Measure of **memory device speed**, it is the **time between** the **memory receiving** a new address **input** & **data** is available at the **output**.

VOLATILE MEMORY

- any memory that requires the application of **electrical power** to **store information**.
  - If the **electrical power** is **removed**, all **information** stored in the memory will be **lost**.

RANDOM-ACCESS MEMORY (RAM)

- memory in which **actual physical location** of a memory word has **no effect** on **how long it takes to read from**, or **write into**, that location.
  - **Access time** is the **same** for any address in memory.
    - **Most** semiconductor memories are **RAMs**.

SEQUENTIAL-ACCESS MEMORY (SAM)

- type of memory in which the **access time is not constant** but **varies** depending on the **address location**.
  - A **stored word** is found by **sequencing** through all address locations until the desired address is reached.
    - **Access times** far **longer** than random-access memory.

READ/WRITE MEMORY (RWM)

- any memory that can be **read** from or **written into** with **equal ease**.

READ-ONLY MEMORY (ROM)

- **broad class** of semiconductor memories designed for applications with a **high ratio of read- to write-operations**.

STATIC MEMORY DEVICES

- **semiconductor** memory devices in which stored **data remains permanently stored** as long as **power is applied**.
  - Without need for periodically rewriting data to memory.

DYNAMIC MEMORY DEVICES

- **semiconductor** memory in which stored data will **not remain permanently stored**, even with power applied.
  - **Unless** the data are **periodically rewritten** into memory.
    - A **refresh** operation.

MAIN MEMORY

- a computer's **working memory**.
  - Stores **instructions** and **data** the CPU is currently working on.

CACHE MEMORY

- **high-speed block of memory** that operates between **slower main memory** and the **CPU** to **optimize the speed** of the computer.
  - **Physically located** in the *CPU, mother board, or both.*

AUXILIARY MEMORY

- referred to as **mass storage** because it stores **massive amounts** of information **external** to the main memory.
    - **Slower** than main memory, always **nonvolatile**.

B GENERAL MEMORY OPERATION

Every memory system requires I/O lines to:

- Apply the **binary address** of the memory location that is to be accessed.
- Enable **memory devices** to respond to control inputs.
- Place **data stored** in the specified address.
- In a **read** operation, enable the **tri-state outputs**.
    - Which applies the data to the output pins.
- In a **write** operation, apply the data to be stored to the **data input pins**.
- **Enable the write** operation, which causes the data to be **stored** at the specified location.
- **Deactivate** the **read or write** controls when **done reading or writing** and **disable** the memory **IC**.

Diagram of a 32 x 4 memory, and the virtual arrangement of memory cells into 32 four-bit words.

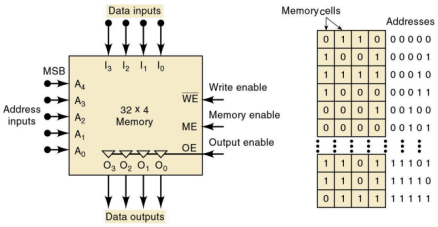

Figure 4: 32 x 4 Memory

- Because this memory stores **32 words**, it has **32 different storage locations** & **32 different binary addresses**, from 00000 to 11111 (0 to 31 in decimal).
- There are **five address inputs—A0 to A4**
- To access one a memory location for read or write, the **five-bit address code** is applied to the **address inputs**.
- In general, **N address inputs** are required for a **memory** with a capacity of **2N words**.
- The **$\overline{WE}$ (write enable)** input is activated to allow the **memory to store data**.
- The **overbar** indicates that the **write operation** takes place when **$\overline{WE}$= 0**.
- The **OE** pin is **activated** to **enable the tristate buffer** and **deactivated** to **place** the **buffers** in the **high impedance (hi-Z) state**.
- A **control signal** connected to **OE** is **active** only when the **bus is ready to receive data** from the memory.

C CPU MEMORY CONNECTIONS

CPU MEMORY CONNECTIONS

- **Main memory** is **interfaced** to the **CPU** through:
    - **Address bus; Data bus; Control bus.**

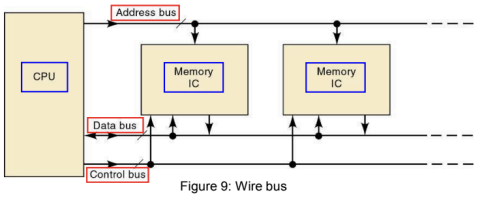

Figure 9: Wire bus

- The **three buses** play a necessary part in allowing the **CPU to write data into memory** and to **read data from memory**.

WRITE OPERATION PROCESS:

- The **CPU** supplies the **binary address** of the **memory location** where the data are to be **stored**.
    - It places this address on the **address bus lines**.
- An **address decoder activates** the memory device's **enable input (CE or CS)**.
- CPU **places data** to be **stored** on the **data bus lines**.
- CPU **activates** appropriate **control signal lines** for the memory **write operation $\overline{WR}$ or R/$\overline{W}$**.
- **Memory ICs internally decode** the binary address to determine the **location** selected for the **store operation**.
- The **data** on the data bus are **transferred** to the **selected memory location**.

READ OPERATION PROCESS:

- The **CPU** supplies the **binary address** of the **memory location** from which data are to be **retrieved**.
    - It places this address on the address bus lines.

- An address decoder activates the memory device's enable input (CE or CS).
- The CPU activates the appropriate control signal lines for the memory **read operation**, which is **normally connected** to on the **memory IC**.
    - **Example:** WR or R/W.
- **Memory ICs** internally decode the binary address to determine the **location** is being **selected to read**.
    - They place data from the **memory location** onto the **data bus**, from which they are **transferred to the CPU**.

Function of each of the system buses:

- **<u>Address Bus</u>** — **unidirectional bus** that carries **binary address outputs** from the CPU to the memory ICs.
    - To select **one memory location**.
- **<u>Data Bus</u>** — **bidirectional bus** that carries **data** between the CPU and the memory ICs.
- **<u>Control Bus</u>** — carries **control signals ($\overline{RD}$ or $\overline{WR}$)** from the CPU to the memory ICs.

D READ ONLY MEMORIES

READ ONLY MEMORIES

- Read-only memory is semiconductor memory designed to **hold data** that are **permanent** or **will not change frequently**.
- Some ROMs **cannot** have their data **changed** once they have been **programmed**—**others** can be **erased & reprogrammed** as often as desired.
    - The process of entering data is called **programming** or **burning the ROM**.
- A major use of ROMs **storage of programs** in **microcomputers**.
    - As ROMs are **nonvolatile**, programs are **not lost** when electrical **power is turned off**.

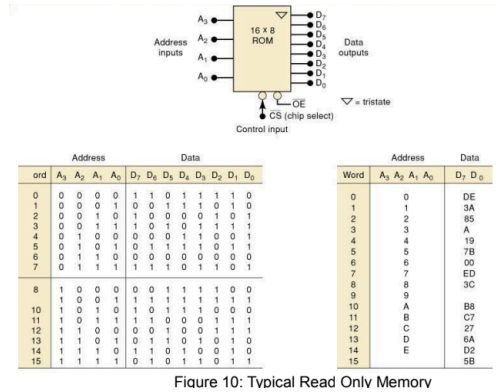

Figure 10: Typical Read Only Memory

To read a data word from ROM requires:

- Applying the appropriate **address inputs**.
- Activating the **control inputs**.

E ROM ARCHITECTURE

The internal architecture (structure) of a ROM IC is complex—but has <u>four basic parts</u>:

- **<u>Register array</u>** — stores **data** programmed **into ROM**.
    - Each register contains **several memory cells** equal to the **word size**.
- **<u>Address decoders</u>** — **Row** & **Column** decoders.
    - Only **one register** will be in **both** row & column selected by the address inputs, and this one will be **enabled**.
- **<u>Output buffers</u>** — pass **data to external data outputs**.
    - The **register** that is **enabled** by the **address inputs** will place its **data** on the **data bus**.
    - These data feed into the **output buffers**, which will pass the data to the **external data outputs**.

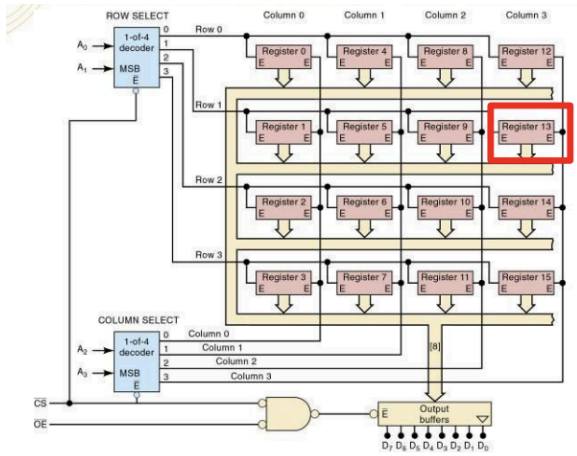

Figure 11: Architecture of a 16 x 8 ROM

F ROM TIMING

ROM TIMING

- There will be **propagation** delay between the **application** of a ROM's inputs and **appearance** of the data outputs during a read operation.
- Called **access time (t_{acc})**, the delay is a measure of **ROM operating speed**.

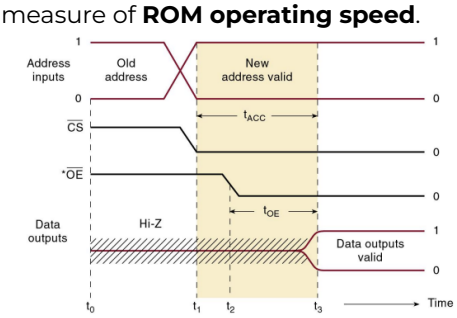

*t_{OE} is measured from the time $\overline{CS}$ and $\overline{OE}$ have both been asserted.

- Another important timing parameter is **output enable time (t_{oe})**, the **delay** between **$\overline{OE}$ input** and the **valid data output**.
- **Values** for **t_{oe}** are always **shorter** than access time.

G TYPES OF ROMs

1. MASK-PROGRAMMED ROM (MROM)

- has **data stored** at the time the **IC is manufactured**.
- **ROMs** are made up of a **rectangular array** of **transistors**.
- Information is stored by either **connecting** or **disconnecting** the source of a **transistor** to the **output column**.
- The **last step** in the manufacturing is to **form** all these **conducting paths or connections**.
- The process uses a **"mask"** to **deposit metals** on the silicon that determine **where connections form**.
- The mask is very **precise**, **expensive** and must be **made specifically for the customer**, with the **correct binary** information.
    - Economical only when many ROMs are being made with exactly the same information.

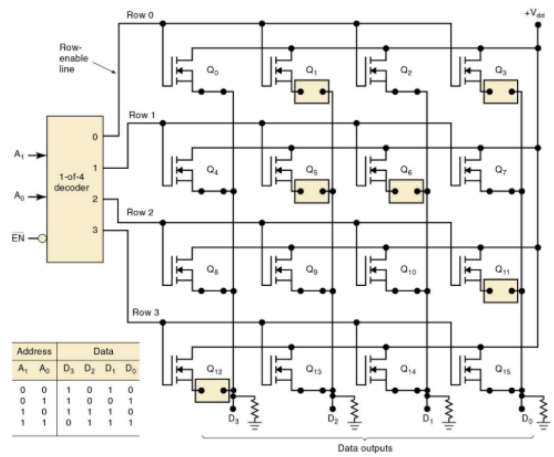

2. PROGRAMMABLE READ-ONLY MEMORY (PROM)

- For **lower-volume** applications, **user-programmable fusible-link** PROMs are available.
    - **Custom-programmed** by the **user**, it **cannot be erased** and **reprogrammed**.
- If information in the PROM is **faulty** or must be changed, it must be **discarded**.
- Often referred to as **"one-time programmable"** (OTP) ROMs.

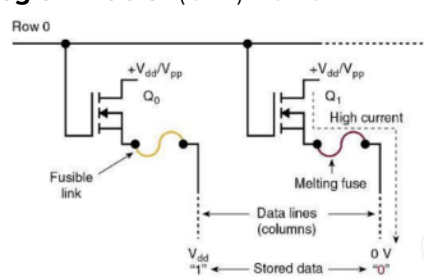

3. ERASABLE PROGRAMMABLE READ-ONLY MEMORY (EPROM)

- An EPROM can be **user-programmed**, **erased and reprogrammed** as often as desired.

- Once programmed, it is a **nonvolatile** memory that will **hold** its stored **data indefinitely**.

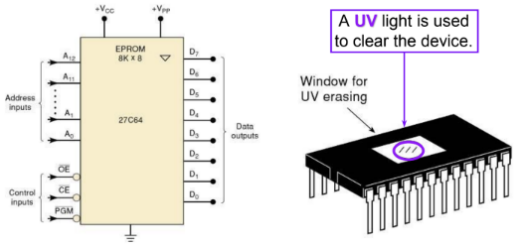

- Major **disadvantages** of UVEPROMs:
  - They must be **removed** from the circuit to be programmed and erased.
  - The erase operation **erases the entire chip**.
  - The erase operation takes up to **20 minutes.**

4. ELECTRICALLY ERASABLE PROGRAMMABLE READ-ONLY MEMORY (EPROM)

- The major characteristic of electrically erasable PROM (EEPROM) is **electrical erasability**.
  - Also the ability to **erase** and **rewrite individual bytes** in the **memory array**.
- Because the internal process of storing a data value in an EEPROM is **quite slow**, the speed of the **data transfer operation** can also be **slower**.
  - EEPROM devices are available in **eight-pin packages** interfaced to a **two- or three-wire serial bus**.

G1 COMPACT DISC (CD ROM)

CD-ROM/DVD ROM

- A very **prominent type** of read-only storage used today in computer systems.

COMPACT DISC READ-ONLY MEMORY (CD-ROM)

- It is mainly used to **mass produce audio CD's** and computer **games**. Computer users can **only read data** and **music** from the discs, but they **cannot burn their own information** onto the discs, from their personal computers.

COMPACT DISC RECORDABLE (CD-R)

- CD-R also known as **(Compact Disc Recordable)** and W**ORM (Write Once Read Many)** is a **blank disc** that users can **put into a CD-ROM** drive to **burn or make a copy** of their personal data, music, videos and information. CD-R's have to use special software to burn specific types of media or data. You cannot use the menu of a data disc to create an MP3 CD or vice versa. Users would select **"Audio CD"** to burn music or **"Data"** to burn documents and files.

COMPACT DISC REWRITABLE (CD-RW)

- can be **erased** and **returned** to its **original blank state**. New files can then be **copied** onto the **rewritable disk**. CD-RW never became as popular as the CD-R's because they are **not compatible with most disc** players to listen to music. They are primarily used to **move data** from one computer to another, or to **copy files** that are only needed a few times.

SIZE

- A **standard** CD-ROM, CD-R and CD-RW can hold up to **700MB** of data. As an **audio CD**, it can be used to store up to **80 minutes of music**. In comparison, a **DVD-ROM** can contain **4.7 GB of information and movies**.

WARNING

- **Shattering** of CD-ROMs while **rare**, have been known to **happen**. The incident occurs when **discs are used in drives** that move at **speeds** of **48x to 52x**. If a CD shatters in the computer during playback or burning, **pieces may fly** out of the drive and embed into your skin. Manufacturers have tried to **build in** fail safes to **protect** users and to **prevent CD-ROMs from exploding**.

G2 STANDARDIZED DISC FORMAT

COMPACT DISC (CD)

- These hold about **700MB** of data. A CD drive can only **read or write CDs**.

DIGITAL VIDEO DISC/DIGITAL VERSATILE DISC (DVD)

- They usually hold about **4.7GB**. DVD drives can also **handle CDs**.

BLU-RAY DISC (BD)

- Often called **Blu-ray drives** and **discs**. They usually hold **25GB**. The drives are **CD** and **DVD compatible**.

DVD+R; +RW; ±R, ±RW

- There are **two standards** for **recordable** and **rewritable** DVDs: **DVD-R and DVD+R,** each with its **equivalent RW variation**, and each requiring its own type of **drive** and **blank disc**. The **± sign**, which you'll only find on drives, tells you that the drive can **burn both - and +**. Virtually all drives these days are ±, making the difference between +R and -R irrelevant.

DUAL LAYER (DL)

- This **doubles** or **nearly doubles** the **capacity** of DVDs and BDs. A **DVD DL** can hold about **9GB**; a **Blu-ray**, about **50GB**. To **burn** discs with these capacities, you need **DL discs**, plus a **DL drive**. **Any** DVD or Blu-ray drive can **read DL discs**.

The acronym after the hyphen tells you what you can do with that type of disc or that type of drive.

ROM: READ-ONLY MEMORY.

- You **cannot write** to a -ROM disc, which left the **factory with data already on it**. A -ROM drive can **read discs but not write** to them, and has **no use** at all for a **blank** disc.

R: RECORDABLE.

- You can **write to one** of these discs once (provided you have an -R drive). But when you're **done**, it's **effectively a -ROM disc**.

RW: REWRITABLE.

- Another stupid acronym that always suggested **"read and write"** to me. You can **write** to these discs, **erase** them, and **write** to them again.

RE: RECORDABLE ERASABLE.

- The **Blu-ray** variation of -RW, with a far more sensible acronym.

BURN

- **Write** to a disc. It's called **burning** because it's done with a laser, not a pen.

G3 DISC CAPACITY

Disc name	Capacity
CD … 74	74 minutes of uncompressed audio or ≈650.3 MiB of data (681984000 bytes).
CD … 80	80 minutes of uncompressed audio or ≈703.1 MiB of data (737280000 bytes).
CD … 90	90 minutes of uncompressed audio or ≈791.0 MiB of data (829440000 bytes). **Disc size cannot be detected automatically and disc needs to be burned using the "Overburn" option.**
CD … 99	99 minutes of uncompressed audio or ≈870.1 MiB of data (912384000 bytes). **Disc size cannot be detected automatically and disc needs to be burned using the "Overburn" option.**
DVD-R (DVD-5)	4.7 GB ≈ 4.38 GiB [1] of data (4707319808 bytes). CDBurnerXP assumes a size of 4706074624 bytes for disc spanning (lower disc sizes have shown in practice).

Disc name	Capacity
DVD+R (DVD-5)	4.7 GB ≈ 4.38 GiB of data (4700372992 bytes).
DVD … DL (DVD-9)	8.5 GB ≈ 7.95 GiB of data (8543666176 bytes).
HD-DVD Single Layer	15 GB ≈ 14.0 GiB of data (15076554752 bytes).
HD-DVD Dual Layer	30 GB ≈ 31.1 GiB of data (33393473536 bytes).
BD Single Layer	25 GB ≈ 23.3 GiB of data (25025314816 bytes).
BD Dual Layer	50 GB ≈ 46.6 GiB of data (50050629632 bytes).

G4 CD/DVD TYPES AND NAMES

Disc type	Description
CD / CD-ROM	**C**ompact **D**isc (or **CD R**ead **O**nly **M**emory), very commonly used term. Usually this refers to non-writable discs.
CD-R	*Writable* discs (or **CD R**ecordable). This means that you can only burn data a single time on it, or multiple times when using *multisession mode* until the capacity is exhausted. You cannot physically delete data (unless you damage the disc and the like).
CD-R 74/80/…	The numbers behind CD-R indicate the capacity of the disc. 74 for examplease means 74 *minutes* of (uncompressed) music (= 640MB). Below this table is a list of all capacities.
CD-RW	*Rewritable* discs (**CD Rew**ritable). You can not only add data, but you can also erase the whole data on disc in oder to put different contents on it. Usually you can erase it a few hundred times. If you want to use this type of disc like a floppy disc, you have to use programs like Nero InCD.
DVD / DVD-ROM	**D**igital **V**ersatile **D**isc (or **DVD R**ead **O**nly **M**emory). Basically the same as CD-ROM, however, a DVD typically has a 6 times greater capacity than a CD.

Disc type	Description
DVD-R / DVD+R	*Writable* DVDs (or **DVD R**ecordable). Basically the same as CD-R with greater capacity. Note that DVD-R (say: DVD minus R) and DVD+R (say: DVD plus R) is a different kind of disc. There is virtually no difference between those types, but it might be the case that your DVD burning device can only burn DVD-R or only burn DVD+R. Most modern devices support both formats equally though.
M-Disc DVD+R	*Writable* DVD+R discs with special properties. By using an inorganic data layer, these discs can preserve data for up to 1000 years (according to the manufacturer). Since usual lasers cannot burn these discs, a drive that supports M-Discs is required.
DVD-RW / DVD+RW	*Rewritable* DVDs (**DVD Rew**ritable). Basically the same as CD-RW with greater capacity. Note the difference between + and -, see DVD-R/DVD+R above.

Disc type	Description
DVD-RAM	Stands for DVD **R**andom **A**ccess **M**emory. It is comparable to a DVD+-RW. However, it has a much higher lifetime (approx. 30 years) and can be erased much more often than a DVD+-RW (at least 10.000 instead of 1.000 times). Also, it has higher data security than a usual DVD. Additional to that you can use it like a floppy disc, if you have appropriate drivers.
DVD … DL	Stands for **D**ouble (or **D**ual) **L**ayer. Double layer discs have twice as much disc space than usual DVDs.
HD-DVD	Stands for **H**igh-**D**efinition **D**igital **V**ersatile **D**isc. HD-DVDs are comparable to DVDs with higher capacity, but have already been abandoned by their creators.

G5 DEVICE COMPATIBILITY

Disc name	Capacity
COMPACT disc	If you have this icon on your drive, it usually can only read (and not write) CDs.
COMPACT disc Recordable	If you have this icon on your drive, it usually can read and write CD(-R)s, but cannot write CD-RW discs.
COMPACT disc ReWritable	If you have this icon on your drive, it usually can read and write CD-Rs and CD-RWs.
DVD	This icon hints at DVD capabilities (at least, reading). If it can also write DVDs, "DVD-R" or "DVD-RW" is usually written below. Without this icon, your drive can neither read nor write DVDs.

G6 USAGE OF DISC TYPES

Task	Disc type
Audio-CD for music player etc.	CD-R with 80 minutes is the default choice. Rewritable discs will not work in every audio player.
Short term data storage, just for "transport"	CD-RW for small and DVD+-RW for large amount of data. This allows you to use the disc multiple times.
Backups, long term data storage	DVD-RAM. They have a quite high lifetime and data security. Or even better yet, if you can afford it: M-Discs
Movies	Usually DVD+-R, unless you want to use the same disc multiple times. A movie won't fit on CD. There is such a thing as an SVCD (method to burn movies to CD), but this results in a rather low-quality movie and multiple discs are required.
Photos	Those will usually fit on a CD-R or CD-RW (use the latter one if you intend to reuse the disc for other purposes later).

H FLASH MEMORY

FLASH MEMORY

- A flash memory cell is like the **simple single-transistor EPROM** cell, with a **cost** considerably **less than** for **EEPROM**.

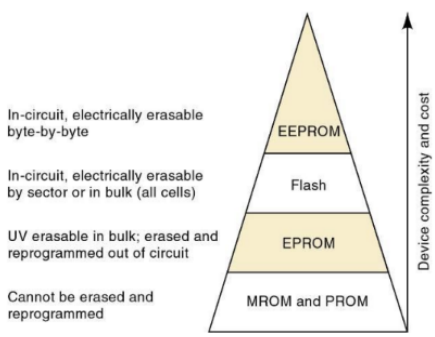

- The unique feature of the **28F256A CMOS** flash memory IC is the **command register**.
  - **<u>Command codes</u>** are written into this register to **control which operations take place** inside the chip.
  - **<u>State control logic</u>** examines the **contents** of the command register and **generates logic** and **control signals**.

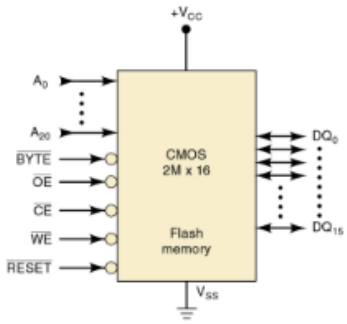

FUNCTIONAL DIAGRAM OF A FLASH MEMORY CHIP

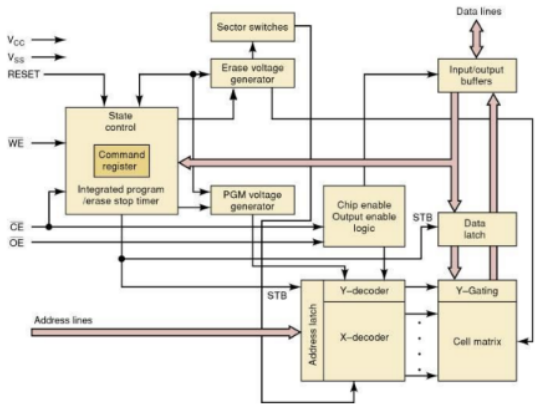

- The first flash devices, created to **improve** on **EEPROM**, used **NOR flash technology**.
  - Circuit functions logically like a NOR gate.
    - Each **transistor** can be **read or written independent** of the status of the other transistors in the group.

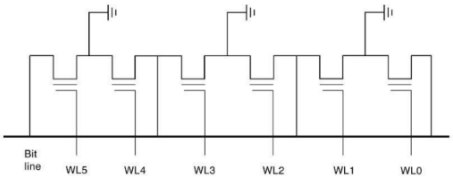

- **NOR flash** offers quick **read access time** and **random access**.
  - Usually used for things like **storing program instructions** for the **microcontroller** in your cell phone or PDA.
- Attempts were made to **improve density** of **mass-storage flash devices**, resulting in the **NAND flash**.

- **Data** must be **accessed** in **conjunction** with the other **word lines being activated** by a control gate voltage.
- Activated by a **control gate voltage** large enough to turn on the **other transistors**—regardless of the amount of charge on the floating gate.

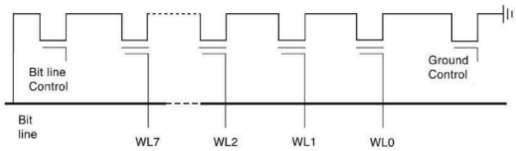

- **NAND flash** circuits offer fast **erase & program time**—but the data must be **dealt with in blocks**.
- NAND flash is used for **mass storage** of pictures, music, and other files in devices like **digital cameras**, MP3 players and USB flash drives.

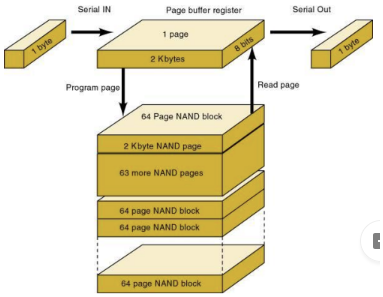

I ROM APPLICATIONS

Here are some of the most common application areas in which ROMs are used:

- **Embedded microcontroller program memory.**
  - Automotive automatic braking systems, cell phones, digital camcorder, microwave ovens, etc.
- **Data transfer and portability.**
  - Cell phones, digital cameras, flash drives, MP-3 players.
- **Bootstrap memory.**
  - A relatively small program, stored in ROM loads the operating system programs from mass storage (disk) into a computer's main internal memory.
- **Data tables.**
  - Tables of data that do not change like trigonometric and code-conversion tables.
- **Data converter.**
  - Data expressed in one type of code is converted to an output expressed in another type, such as BCD to 7-segment LED readouts.
- **Function generator.**
  - Produces waveforms such as sine waves, sawtooth waves, triangle waves, and square waves.

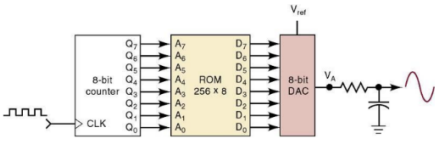

A ROM look-up table and a DAC are used to generate a sine-wave output signal.

J SEMICONDUCTOR RAM

RANDOM ACCESS MEMORY (RAM)

- means **any memory address location** is as **easily accessible** as any other.
- Used in computers for **temporary storage** of programs and data—requires **fast read/write cycle times** to avoid slowing computer operation.
  - RAM can be **written** into and **read** from **rapidly with equal ease**.
- RAM is **volatile** and will **lose all stored information** if **power is interrupted** or turned off.
  - Some **CMOS RAMs** can be powered from **batteries** when main power is interrupted.

K RAM ARCHITECTURE

RAM ARCHITECTURE

- It is helpful to think of RAM as consisting of a **number of registers**.
  - Each storing a **single data word**, and each having a **unique address**.
- Most memory chips have **one or more CHIP SELECT (CS) inputs**, used to **enable** the **entire chip** or **disable** it completely.
  - In ***disabled mode,*** all data inputs outputs are disabled

(Hi-Z)—*neither a read nor a write can take place.*

- In order to conserve pins on an IC package, manufacturers often **combine data input and output functions** using **common** input/output pins.

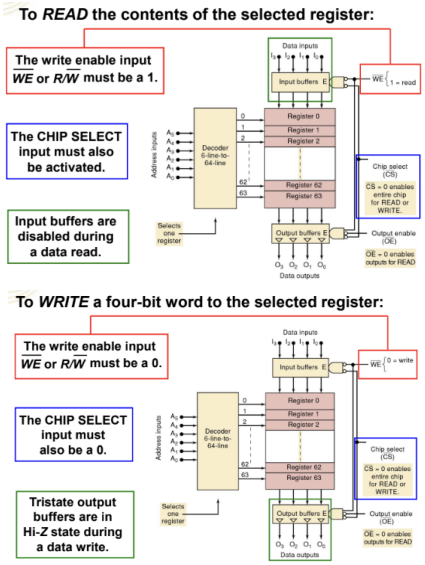

L STATIC RAM (SRAM)

STATIC RAM (SRAM)

- Static-RAM memory cells are essentially **flip-flops** that **stay** in a **given state** (store a bit) **indefinitely**.
  - Provided **power** to the circuit is **not interrupted**.
- Available in **bipolar**, **MOS** and **BiCMOS** variations
  - The **majority** of applications today use **CMOS RAMs**.

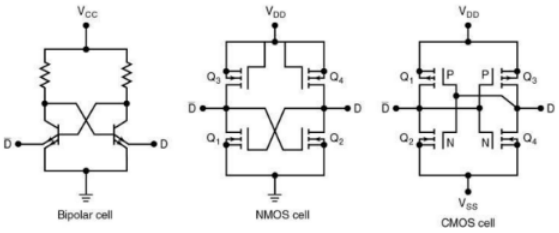

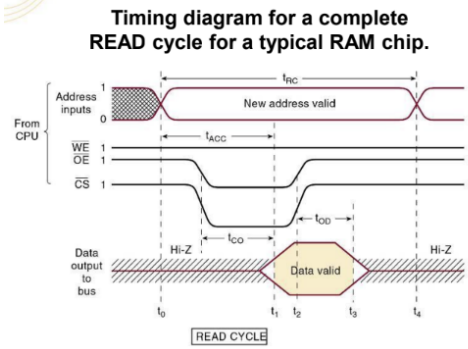

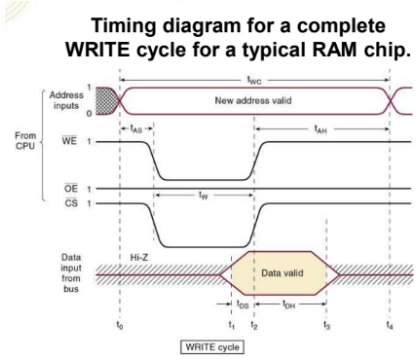

- An example of an actual **SRAM IC** is the **MCM6264C CMOS 8K x 8 RAM**,
  - **Read- and write-cycle** times of **12 ns**.
  - Standby **power** consumption of only **100 mW**.

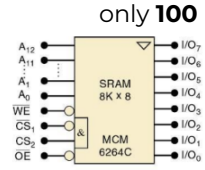

Mode	Inputs WE	CS1	CS2	OE	I/O pins
READ	1	0	1	0	$DATA_{OUT}$
WRITE	0	0	1	X	$DATA_{IN}$
Output disable	1	X	X	1	High Z
Not selected po er do n	X	1	X	X	High Z
	X	X	0	X	

X = don't care

- Industry standards created by the **Joint Electronic Device Engineering Council (JEDEC)** have led to **memory devices** that are **interchangeable**.

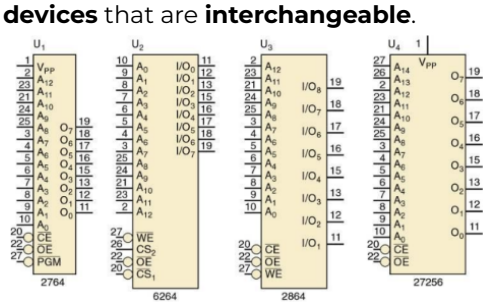

M DYNAMIC RAM (DRAM)

DYNAMIC RAM (DRAM)

- stores **data as charges** on **capacitors**, which gradually **disappear** due to **capacitor discharge**.
    - It is necessary to **refresh** the data periodically by **recharging capacitors**—typically every **2, 4, or 8 ms**.
- Much **larger capacities** and much **lower power consumption** make DRAMs the **memory of choice**.
    - Where the most important design considerations are keeping **down size, cost, and power**.

N DYNAMIC RAM STRUCTURE AND OPERATION

DYNAMIC RAM STRUCTURE AND OPERATION

- The dynamic RAM's internal architecture can be visualized as an array of single-bit cells.

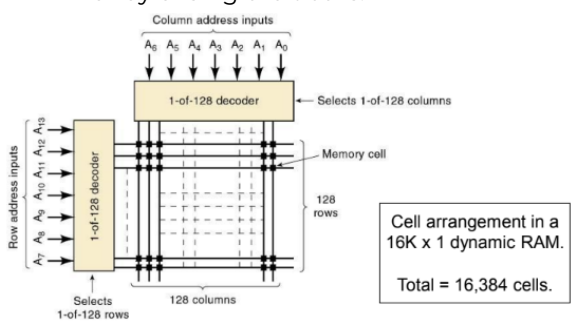

Simplified architecture of a typical DRAM.

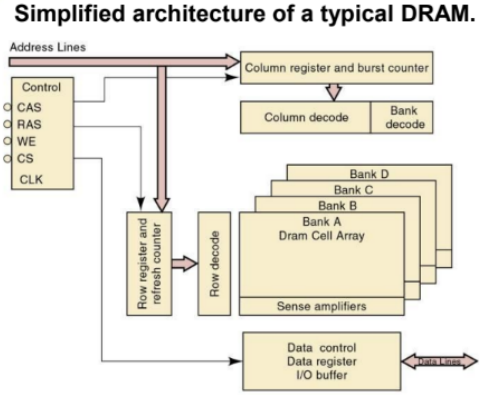

Essential ideas involved in writing to, and reading from a DRAM.

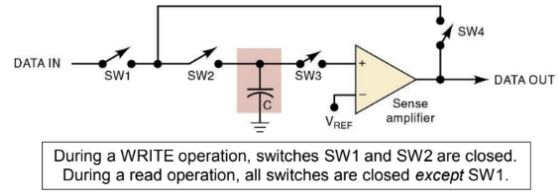

- In order to **reduce** the **number of pins**, high-capacity DRAM utilize **address multiplexing**.
    - Each address input pin can accommodate **two different address bits**.
- In **multiplexed addressing**, the address is applied in two parts—the **row**, and then **column address**.
- The **address lines** are connected **directly** to both the **row & column address registers**.
    - The **row register** stores the **upper part** of the address, and the **column register** stores the **lower part**.
- The **row address strobe ($\overline{RAS}$)** stores the contents of the address **inputs** into the **row address register**.
- The **column address strobe ($\overline{CAS}$)** stores the contents of the address **inputs** into the **column address register**.

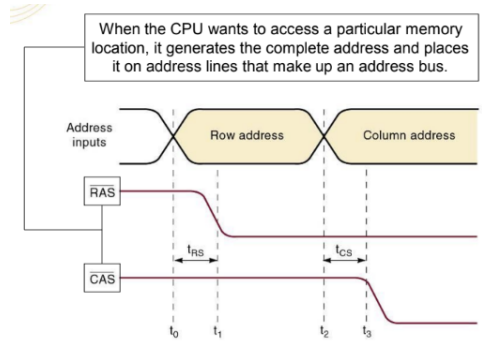

O DRAM READ/WRITE CYCLES

Signal activity for a READ operation on a dynamic RAM.

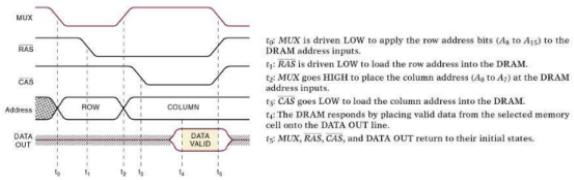

Signal activity for a WRITE operation on a dynamic RAM.

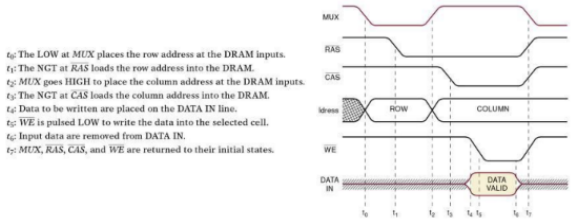

P DRAM REFRESHING

DRAM REFRESHING

- When a **read** operation is **performed on a cell**, **all** of the cells in the row will be **refreshed**.
- **Refresh control logic** is used to make sure **each row is refreshed** within the **time limit**.
  - In ***burst refresh mode***, **normal memory operation** is **suspended**, and each row is **refreshed** in succession **until all rows have been refreshed**.
  - In a ***distributed refresh***, row refreshing is **interspersed** with the **normal operations** of the memory.
- The **most universal method** for refreshing a DRAM is the **RAS-only refresh**.
  - It is performed by **strobing** in a row address with **RAS** while **CAS** and **WE** remain **HIGH**.

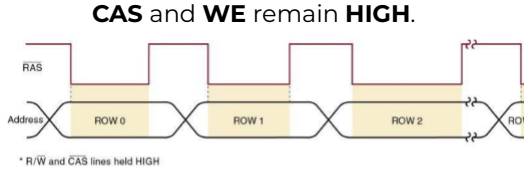

A **dynamic RAM (DRAM) controller** is often used to perform address multiplexing and refresh count sequence generation.

Q DRAM TECHNOLOGY

DRAM TECHNOLOGY

- **Standard memory interface connectors** are used.
  - The connectors receive a **small printed circuit card** with **contact points** on both sides of the card edge.
    - Allow **easy memory component** installation/replacement.

Q1 MEMORY MODULES

1. SIMM — SINGLE IN-LINE MEMORY MODULE

- a circuit card with **72** functionally equivalent contacts on both sides.

2. DIMM — DUAL-IN-LINE MEMORY MODULE

- has from **168 to 240** functionally unique pins on each side.

3. SODIMM — SMALL-OUTLINE, DUAL-IN-LINE MEMORY MODULE

- for **compact** applications, such as laptop computers.

4. RIMM — RAMBUS IN-LINE MEMORY MODULE

- a **proprietary** package that holds **Direct Rambus DRAM (DRDRAM)**.

5. FPM DRAM — FAST PAGE MODE DRAM

- allows **quicker access** to random memory locations within the **current "page."**
- A **page** is a **range** of memory addresses that have **identical upper address** bit values.
  - Only the **lower** address lines must be **changed**.

6. EDO DRAM — EXTENDED DATA OUTPUT DRAM

- offers a **minor improvement to FPM**.
- For accesses on a **given page**, the data value at the current memory location is **sensed** and **latched** onto the **output pins**.
- While these data are present on the outputs, a **new address** on the current page can be **decoded**, and **data path circuitry** can be **reset** for the next access.
  - This allows the **memory controller** to be **outputting** the

next address at the same time the current word is being read.

7. SDRAM — SYNCHRONOUS DRAM

- is designed to **transfer** data in **rapid-fire bursts** of **several sequential** memory locations.
- The **first location** accessed is the **slowest** due to the **overhead (latency)** of **latching row & column** address.
    - After this data values are **clocked** by the bus system.
- SDRAMs are organized in t**wo (or more) banks**.
    - Allows data to be **read out** at a **very fast rate** by alternately accessing each of the two banks.
- **Self-refresh mode** allows the memory device to **perform all** of the **necessary functions** to keep its **cells refreshed**.

8. DDRSDRAM — DOUBLE DATA RATE SDRAM

- refers to the memory module's **interface** to the **PC bus**.
    - Achieves **higher data rates** by **transferring** data on the **rising and falling edge** of the system clock.
        - Burst transfer rates twice as fast as the **SDRAM ICs.**
- DDR2 uses **buffering techniques** to produce **I/O data rates** four times **faster** than the SDRAMs.
    - DDR3 transfers data **eight times faster**.
- **Speeding** up the system clock offers **marginal improvement** in performance—given that the SDRAM **latency** is the **ultimate limiting factor** of maximum speed.

R OTHER MEMORY TECHNIQUES

1. MAGNETIC

- The **first method** of magnetic storage of digital information involved **reels of magnetic tape** for **long-term storage/retrieval** of programs and data.
- The next improvement involved **coating rigid (hard) disks** with **magnetic media** and **rotating the disks** while moving a **magnetic read/write head radially** across the disk.

2. NONVOLATILE MAGNETIC

- **High-speed, random-access, nonvolatile** magnetic storage was also tried in the early days of computers using **"magnetic core"** technology.
    - **Rows and columns** of little electromagnets that could be **polarized** in **either direction**.
- This **basic technology** has been brought back recently in the form of **magnetoresistive random access memory (MRAM)**.

3. OPTICAL

- The **optical disc** is a very **significant digital storage** memory technology.
    - Digital audio compact discs (**CDs**) became available in the early **1980s**,
    - Digital video (**DVD**), and Blu-Ray Discs (**BD**).
- All optical storage formats use essentially the **same technology**, differing largely in **format & density**.

S EXPANDING WORD SIZE AND CAPACITY

EXPANDING WORD SIZE AND CAPACITY

- In many applications, **required RAM or ROM** memory capacity or word size **cannot be satisfied by one memory chip**.
- **Several chips** must be **combined** to provide the capacity and/or the word size.
- The combination of the **two RAM** chips acts like a **single 16 x 8 memory**, and is referred to as a **16 x 8 memory module**.

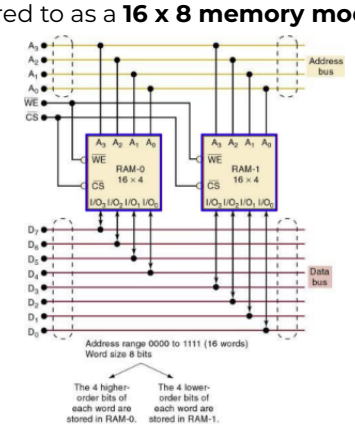

Eight 2125A 1K 1 chips arranged as a 1K x 8 memory.

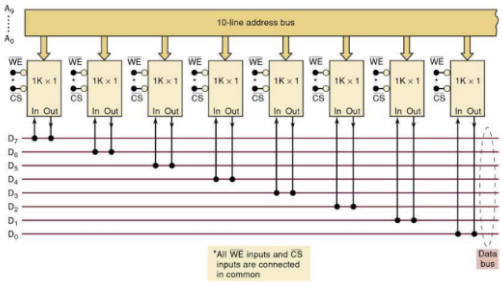

Incomplete address decoding is useful when different memory devices are used in the same system

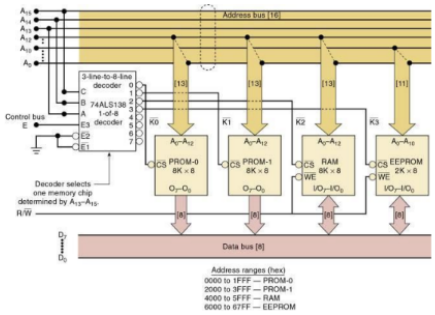

DRAM ICs with word sizes of 1-4 bits must be combined to form larger word size modules

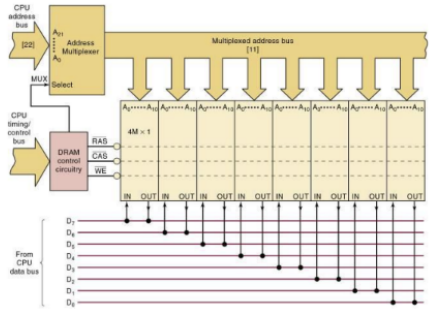

T SPECIAL MEMORY FUNCTIONS

SPECIAL FUNCTIONS PERFORMED BY MEMORY DEVICES IN VARIOUS APPLICATIONS.

- <u>**Power down storage.**</u>
  - **Critical operating parameters** applied when a system is **powered up**.
  - **Industrial process control systems** that must **retain memory** of where they are in a process under all conditions.
- <u>**Cache memory.**</u>
  - **High speed** memory that **communicates directly** with the **CPU**
    - **Level 1 cache** is on **CPU**.
    - **Level 2 cache** is **SRAM external** to **CPU**.

First in first out (FIFO) memory.

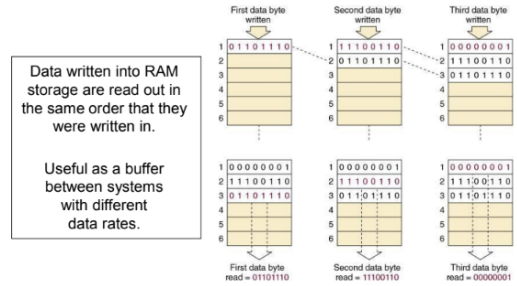

DATA RATE BUFFERS (FIFOs)

- are often referred to as **linear buffers**.
  - As soon as all the locations in the buffer are **full**, **no more entries are made** until the buffer is **emptied**.

CIRCULAR BUFFER

- A similar memory system is a circular buffer, used to **store the last n values entered**.
  - Where **n** is the number of **buffer memory locations**.
- Each time a new value is written to a circular buffer, it **overwrites (replaces) the oldest value**.
- When the **highest address** is reached, the address counter will **"wrap around"** and the **next location** will be the **lowest address**.

U TROUBLESHOOTING RAM SYSTEMS

TROUBLESHOOTING RAM SYSTEMS

- Faults in RAM can cause **unreliable** system performance or **"crashes."**
- In order to determine if RAM is working properly you must know **how it normally operates**.
- The decoding logic can be tested using **signal injection**, or by forcing a certain address onto the bus to **obtain a known decoder output**.
- To test the complete RAM system, patterns of **1s and 0s** are **written and read** from each memory location.
  - By **alternating** the patterns each bit can be **checked for R/W** of both **1s and 0s.**
- Pattern checking **does not catch all errors**.

    - There may be errors that occur only in certain patterns.
- A **memory check** is commonly run when a system is **powered up**.

V TESTING ROM

TEST OPTIONS INCLUDE:

- **Printing** out a listing of the **memory contents**.
    - Memory contents are compared to a **reference ROM**.
- **Checksums**.