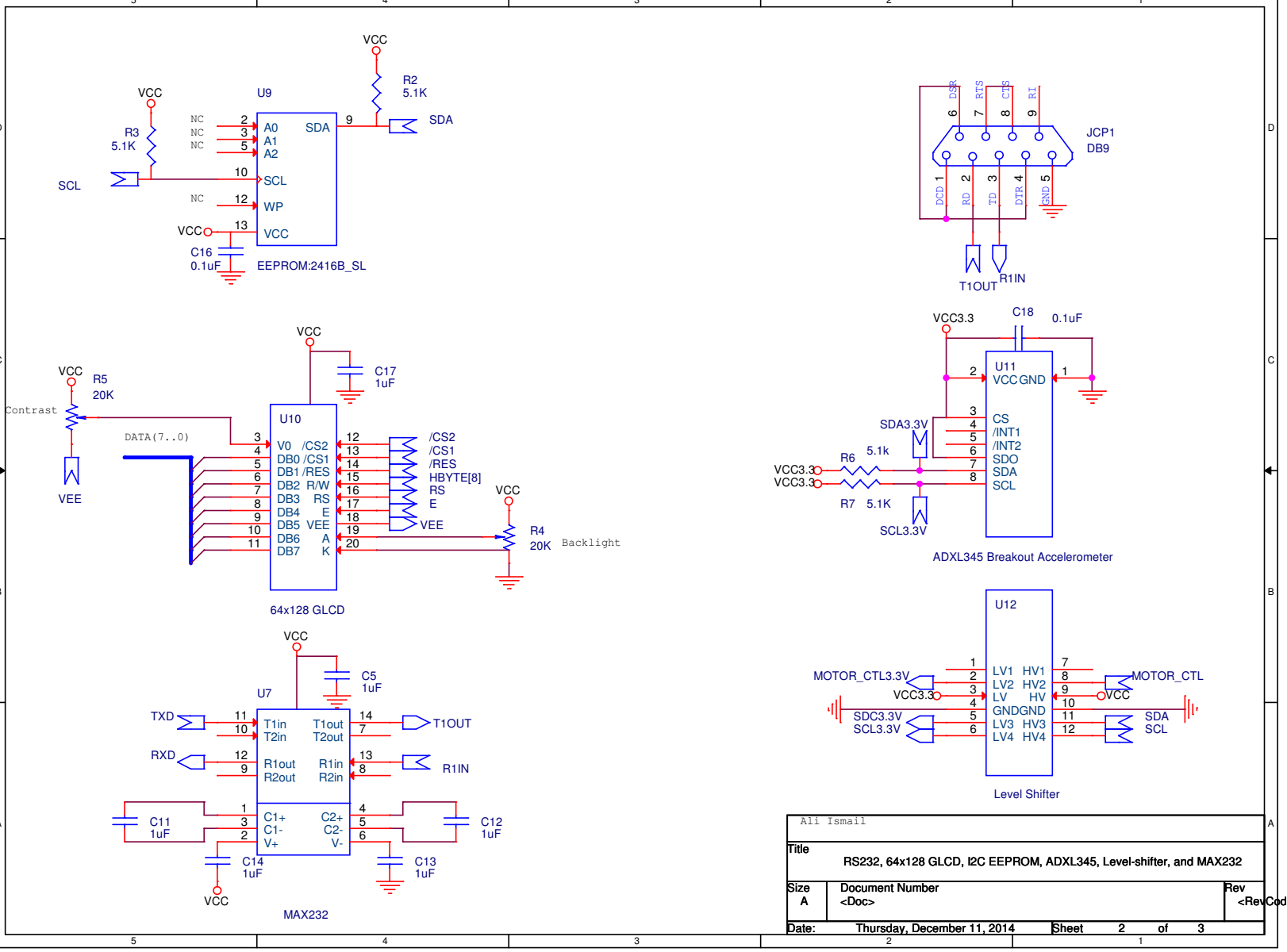

Ali Ismail		
Title: RS232, 64x128 GLCD, I2C EEPROM, ADXL345, Level-shifter, and MAX232		
Size: A	Document Number: <Doc>	Rev: <RevCod
Date: Thursday, December 11, 2014	Sheet 2 of 3	