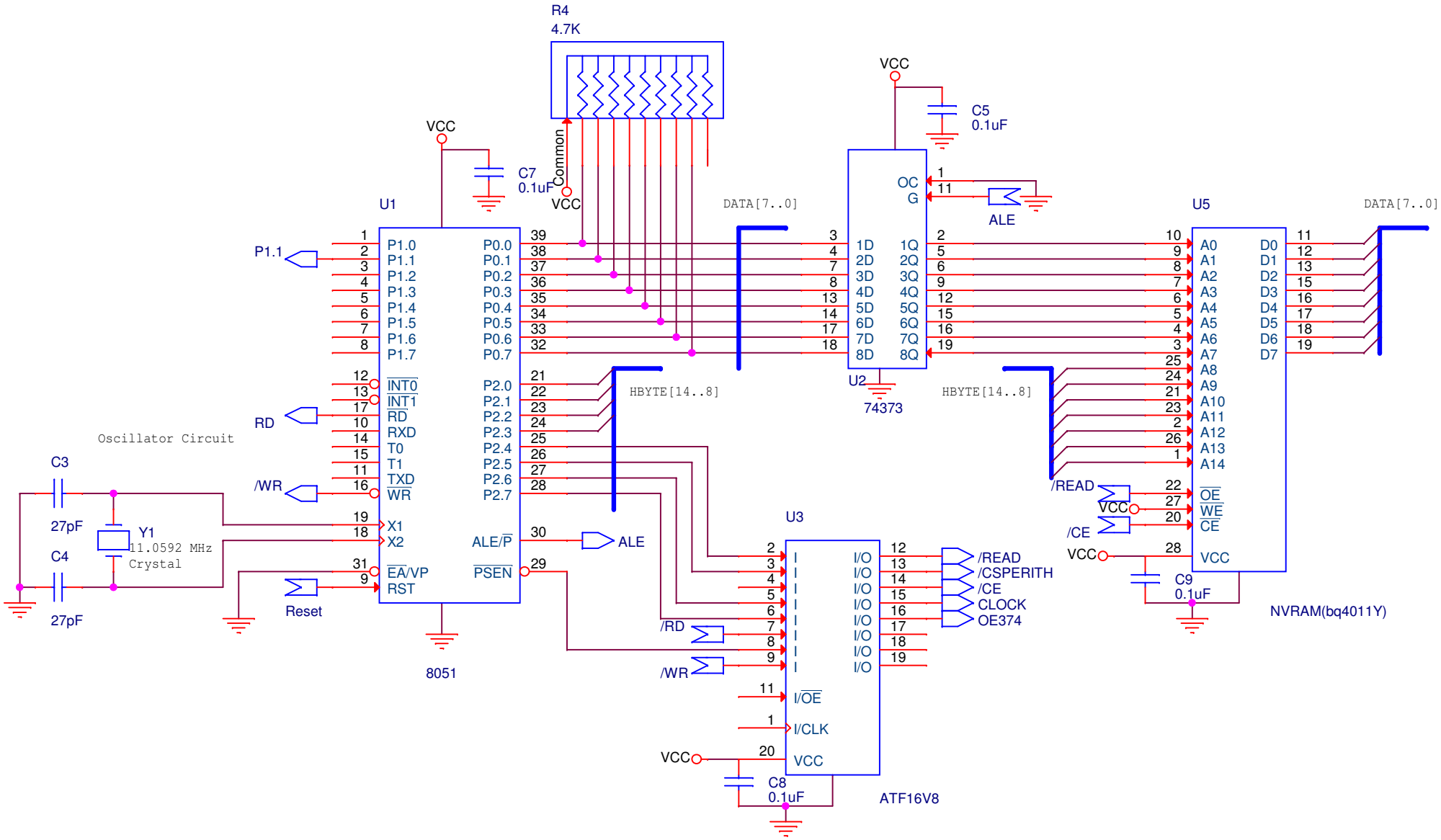

Ali Ismail

Title: Basic 8051 Circuit, SPLD Circuit, NVRAM Circuit, 373 Latch Circuit

Size	Document Number	Rev
A		

Date: Monday, September 29, 2014 Sheet 2 of 3