Business Requirements Document (BRD)

Division/Department: Supply Chain Management

Project/Initiative: Vendor Relationship Management System

Date: Feb 2022

Version: 1.2

ipNX Nigeria Limited

4, Balarabe Musa Crescent,

Victoria Island, Lagos,

Nigeria.

This document is proprietary and confidential. No part of this document may be disclosed in any manner to a third party without the prior written consent of **ipNX** Nigeria Limited. It may be used only for the agreed purpose for which it has been provided.

TABLE OF CONTENT

1. Document Revisions 2

2. Document Approvals 2

3. Introduction 4

3.1 4

3.1.1 4

3.1.2 4

3.1.3 4

3.2 5

3.2.1 5

3.2.2 5

3.3 5

3.3.1 5

3.3.2 5

3.3.3 5

3.3.4 5

4. Business Process Overview 6

4.1 6

4.2 8

5. Use Cases 7

5.1 12

6. Business Requirements 9

6.1 20

6.2 29

7. Appendices 12

7.1 **Error! Bookmark not defined.**

7.2 **Error! Bookmark not defined.**

7.3 **Error! Bookmark not defined.**

7.4 **Error! Bookmark not defined.**

7.5 31

This document is proprietary and confidential. No part of this document may be disclosed in any manner to a third party without the prior written consent of **ipNX** Nigeria Limited. It may be used only for the agreed purpose for which it has been provided.

Document Revisions

Date	Version Number	Document Changes
05/02/2022	0.1	Initial Draft
08/02/2022	1.1	Second Draft
21/04/2022	1.2	Revised to include recommended changes, reporting requirements and wireframe for registration

Document Approvals

This document has been approved as the official Business Requirements Document for **Vendor Relationship Management Portal** and accurately reflects the current understanding of business requirements. Following approval of this document, requirement changes will be governed by the project's change management process, including impact analysis, appropriate reviews and approvals.

Project Role	Name	Signature/Electronic Approval	Date
Project Sponsor	Rita Okoji -Adesoji		
Business Owner	Buky Akerele		
Project Manager	Chidinma Offong		
System Architect			
Development Lead			
User Experience Lead			
Quality Lead			

This document is proprietary and confidential. No part of this document may be disclosed in any manner to a third party without the prior written consent of **ipNX** Nigeria Limited. It may be used only for the agreed purpose for which it has been provided.

1. Introduction

1.1 Project Summary

1.1.1 Objectives

The automation of vendor relationship management portal will provide an avenue for the application to be used as a tool for increasing vendor/contractor pool and for spooling quotations for tendering purposes.

A successful delivery of this portal will enable:

- Ease of contractor signups
- A Seamless process of admitting vendors into the pool of available contractors
- Ease of reaching out to vendors /contractors to submit quotations for tendering purpose

1.1.2 Background

Currently the vendor relationship management is completely manual. Vendors would either walk-in to the office or send their documents via email to start the registration process. The management of these vendors are also manual. With this web-based application there would be an increase in operational efficiency, ability to track the number of contractors, view the status of contractors etc

This web-based application is being developed to better manage the vendor/contractor database of the company with the aim of providing a seamless registration process. The automation of the vendor registration process will provide an avenue for the application to be used as a tool for the sourcing of quotations for tendering purposes.

1.1.2.1 Business Drivers

- Supply chain management is constantly looking for a faster means to securing the services of technical and non-technical contractors as well as vendors with specialized services which enables business in quick delivery of projects and meeting set timelines.
- Increase operational efficiency
- Reduced paperwork
- Reduce workload
- Increased productivity
- Eliminate paperwork

1.1.3 Stakeholders

The following comprises the internal and external stakeholders whose requirements are represented in this document:

S/N	Stakeholders
1.	SCM

This document is proprietary and confidential. No part of this document may be disclosed in any manner to a third party without the prior written consent of **ipNX** Nigeria Limited. It may be used only for the agreed purpose for which it has been provided.

S/N	Stakeholders
2.	The Divisions

1.2 Project Scope

1.2.1 In Scope Functionality

- Request for Vendor
- Sign up/Register and login by Vendors and User departments
- Different logins for different types of users; Vendors & ipNX Staff
- Ability for SCM users, Authorizers and Approver to validate the registered vendors/contractors
- Ability to create/delete vendors
- View approved or declined request
- Ability to screen all vendors and approve vendors
- Change vendor status automatically
- Ability to request for Quotation (RFQ) from vendors
- Ability to view Contractor/vendor history
- Provide audit trail
- Reporting on vendor history

1.2.2 Out of Scope Functionality

- Payment of Contractor
- Ability to evaluate the performance of vendors (this would be a future feature)

1.3 System Perspective

1.3.1 Assumptions

- There is a database of existing contractors
- Ability to integrate with legacy systems - PARIC.

1.3.2 Constraints

- Delay in process documentation review, approval, and implementation.

1.3.3 Risks

- Continuous change in procurement policies and business requirements

1.3.4 Dependencies

- Access to internet connection
- Integration with vendor request service desk http://scmportal.ipnxnigeria.net:7000/servicedesk/customer/
- Integration with PARIC

This document is proprietary and confidential. No part of this document may be disclosed in any manner to a third party without the prior written consent of **ipNX** Nigeria Limited. It may be used only for the agreed purpose for which it has been provided.

Business Process Overview

1.4 Current Business Process (As-Is)

1.4.1 Request for a vendor by User department

This process describes how an ipNX staff request for a vendor

- The user visits http://scmportal.ipnxnigeria.net:7000/servicedesk/customer/
- The use logs in
- The user raises a new vendor request
- The user fills and submits the form
- SCM team receives the request, and the request is assigned to an agent
- The requester receives a message that the request has been assigned

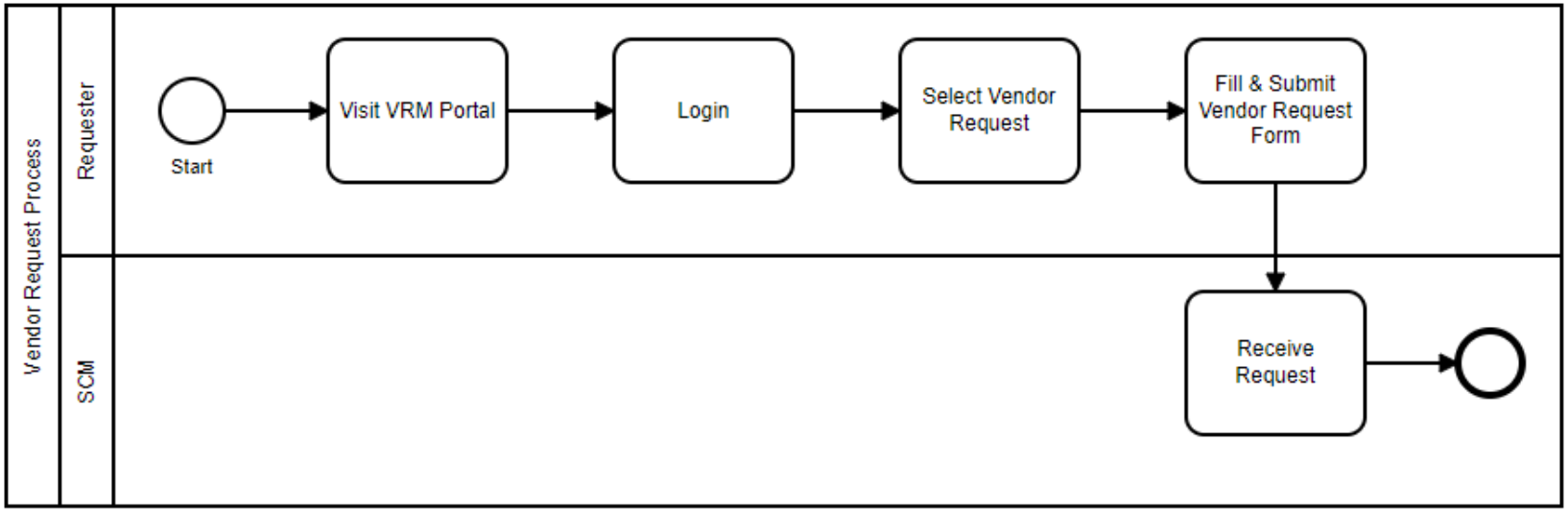

This document is proprietary and confidential. No part of this document may be disclosed in any manner to a third party without the prior written consent of ipNX Nigeria Limited. It may be used only for the agreed purpose for which it has been provided.

1.4.2 Registration and Onboarding

- VRM team receives the request
- The request is assigned to an agent
- The agent sources for vendors via social media and any other medium
- The agent sends their company profile via email
- The agent team and the ipnx staff checks and validates the profile of the vendor
- The agent team sends the document requirements for registration to the vendor
- The vendor sends documents to the VM team via email
- The VM team reviews the documents, screen and evaluate vendors
- If the vendor does not pass the evaluation the vendor is notified via email
- If the vendor passes the evaluation Tenders Board approves the documents and the vendor is on-boarded

This document is proprietary and confidential. No part of this document may be disclosed in any manner to a third party without the prior written consent of **ipNX** Nigeria Limited. It may be used only for the agreed purpose for which it has been provided.

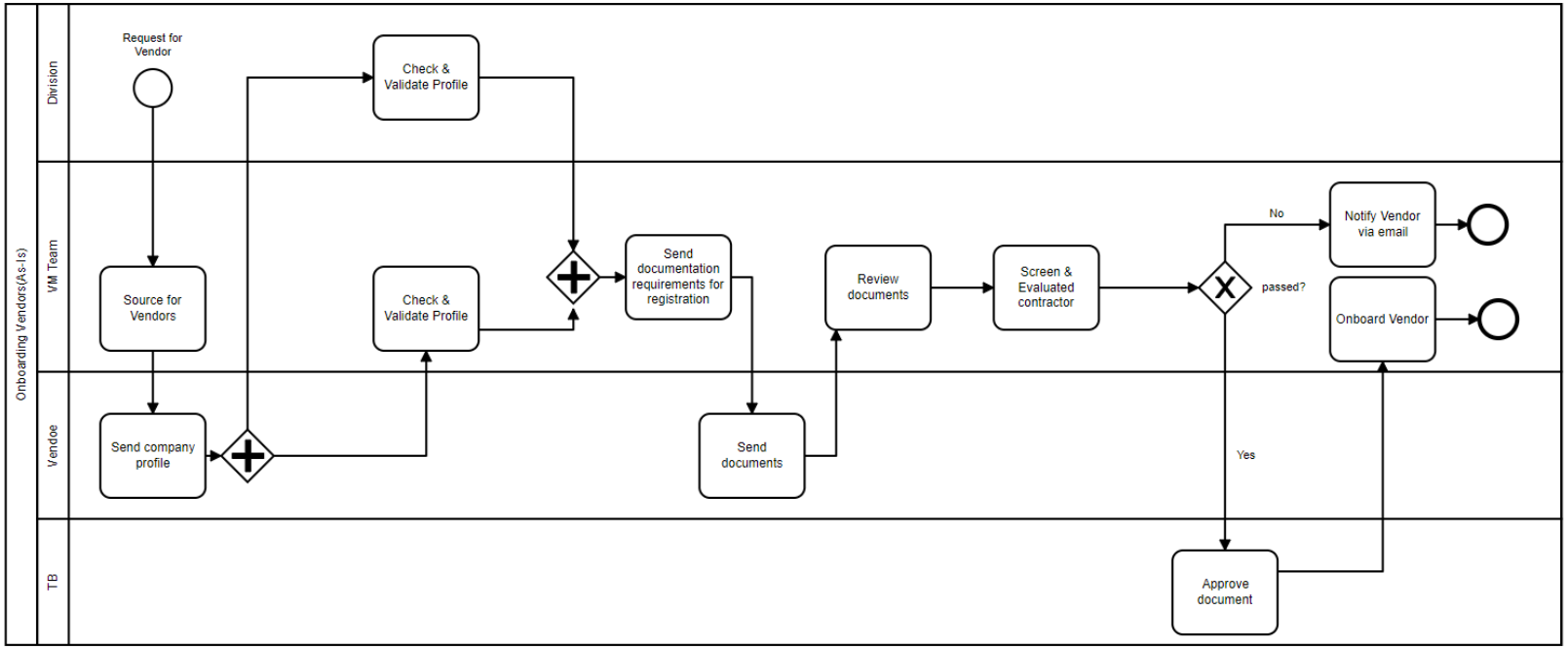

1.5 Proposed Business Process (To-Be)

The proposed business process allows vendors to visit the portal for registration and maintain a dedicated account

1.5.1 Request for A Vendor

- A requester visits the VRM portal
- A requester selects the user profile “Requester”
- The requester registers and creates an account
- The requester raises a new vendor request
- The requester fills the vendor request form
- SCM team receives the request, and the request is assigned to an agent

This document is proprietary and confidential. No part of this document may be disclosed in any manner to a third party without the prior written consent of **ipNX** Nigeria Limited. It may be used only for the agreed purpose for which it has been provided.

- The requester receives a message that the request has been assigned

1.5.2 Registration and Onboarding

- A requester requests for a vendor online
- VRM team receives the request via email and sources for vendors
- Vendor sign ups on the VRM portal to start the registration process
- The vendor fills the form and uploads the required documents (including extra documents)
- The application is submitted to the VRM team for evaluation
- The VRM team receives a notification of the vendor's profile being created
- The VRM team checks/validates the profile and documents
    - If the application is not approved the vendor would receive a notification via email that the application was not approved
    - If the documents are missing or not valid, the VRM team indicates the document to be uploaded and a notification is sent via email to the vendor to upload missing documents
- If the application is approved, the vendor receives an email notification with the login ID and password to access the VRM Portal
    - The system sends the profiles of the approved vendors to the requester for review and shortlisting (which would be used during the screening exercise)
- VRM team sets a date for screening
- Vendor and requester receive a notification on the screening date
- The vendor is screened
    - If the vendor fails, the screening process the vendors is notified via email
- If the vendor passes the screening process the HOD SCM reviews the vendors
- The system sends a notification to TB with the link to approve the vendors
- TB logs in and approves the vendors
- The status and the system change the status to Active and a notification is sent to the vendor, SCM HOD, finance, risk management, quality and audit.
- The contractor is on boarded

This document is proprietary and confidential. No part of this document may be disclosed in any manner to a third party without the prior written consent of **ipNX** Nigeria Limited. It may be used only for the agreed purpose for which it has been provided.

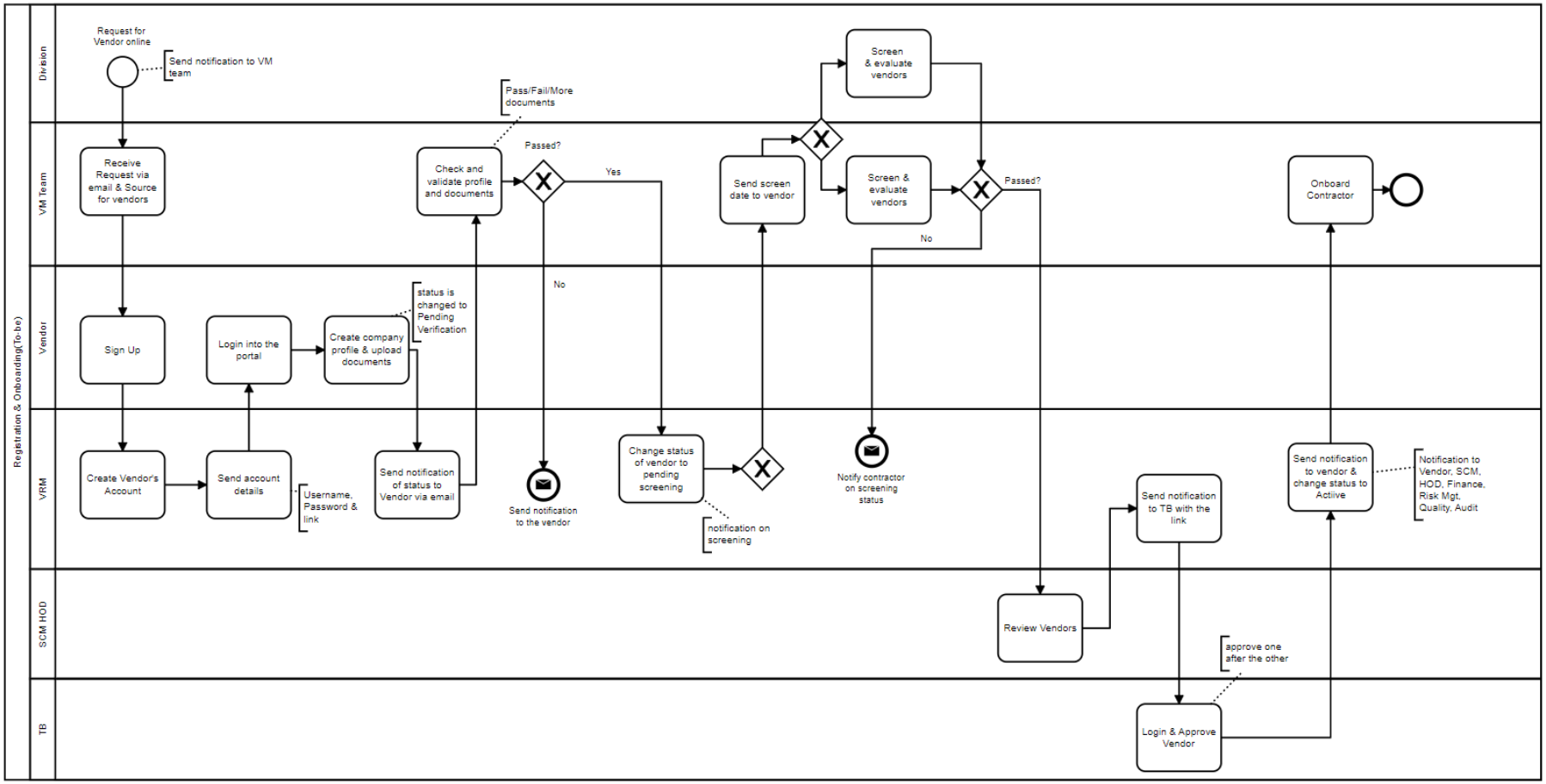

1.5.3 RFQ Process

This is the proposed process for Requesting for quotation

a. Procurement team logs into the portal
b. Procurement team selects publish RFQ
c. Procurement team selects the category of vendors from the existing database
d. Enters RFQ details and clicks on submit
e. The vendors in the category selected receive a notification to participate in the RFQ

This document is proprietary and confidential. No part of this document may be disclosed in any manner to a third party without the prior written consent of **ipNX** Nigeria Limited. It may be used only for the agreed purpose for which it has been provided.

f. The vendor logs into the portal
g. Selects RFQ
h. The vendor has the option to reject or participate.
    a. If he rejects, the vendor enters a remark as to reason for not participating
i. If he accepts a notification is sent to the procurement team via email
j. The vendor views the RFQ information and enters the quotation for each line item
k. Submits the RFQ
l. Procurement team receives a notification

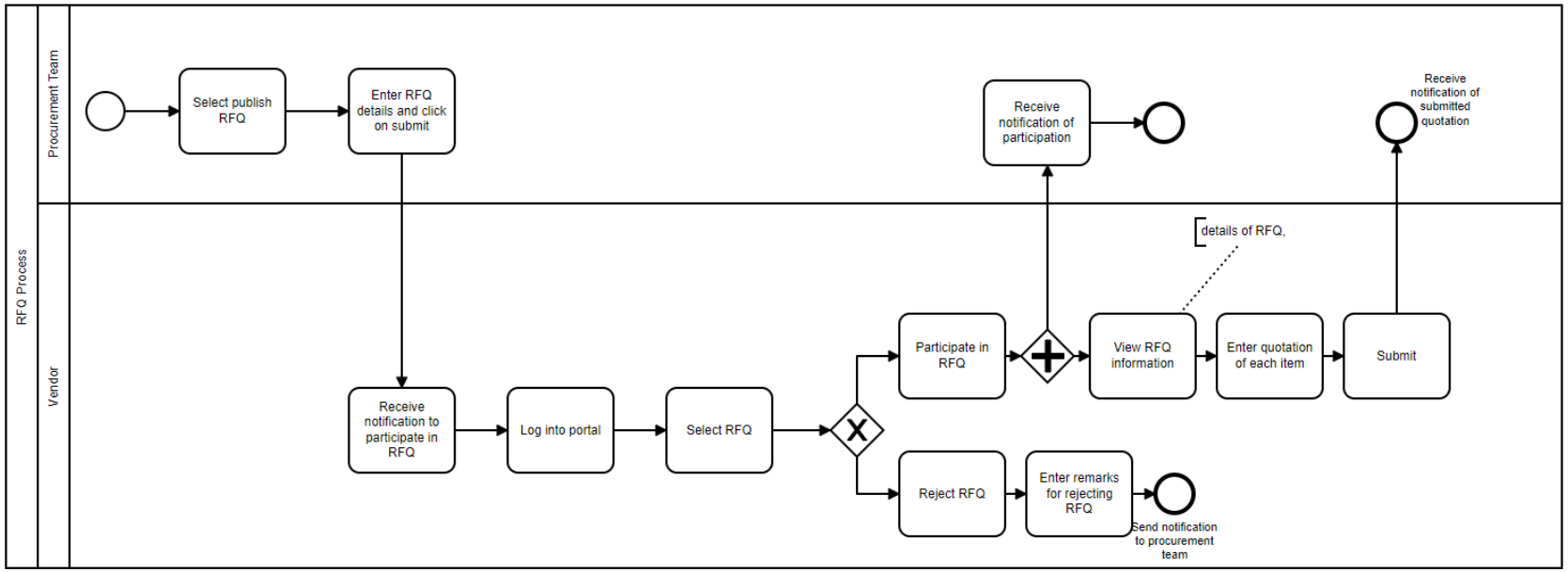

This document is proprietary and confidential. No part of this document may be disclosed in any manner to a third party without the prior written consent of **ipNX** Nigeria Limited. It may be used only for the agreed purpose for which it has been provided.

Use Cases

1.6 Use case Narrative

1.6.1 Request for Vendor

Use Case ID:	001		
Use Case Name:	Request for Vendor		
Created By:	Frances Nnamadim	Last Updated By:	
Date Created:	15/03/2022	Date Last Updated:	

Actors:	Requester
Description:	This use case describes how a user requests for a vendor
Pre-conditions:	Portal is available and accessible
Post-conditions:	1. Request is sent 2. Request is received by SCM via email
Normal Course: (first time user)	1. The user visits the VRM Portal 2. The user selects the user profile “Requester” 3. The user selects register 4. The user creates an account by entering the following a. Full Name b. Email c. Password 5. The user selects the sign-up button 6. The system successfully creates the account and sends the login details (username and password) to the user 7. The user logs into the system with the following details a. Division (drop down) b. Short Caption c. Desired Skills d. Attachment e. Due Date f. Justification g. Add stakeholders

This document is proprietary and confidential. No part of this document may be disclosed in any manner to a third party without the prior written consent of **ipNX** Nigeria Limited. It may be used only for the agreed purpose for which it has been provided.

	8. The user selects the create button 9. The system creates the request and sends a notification to SCM team
Alternative Course(s):	1. The user selects the sign in button 2. The user enters the following details a. Email b. Password 3. The system successfully creates the account and sends the login details (username and password) to the user 4. The user logs into the system with the following details a. Division (drop down) b. Short Caption c. Attachment d. Due Date e. Justification f. Add stakeholders 5. The user selects the create button 6. The system creates the request and sends a notification to SCM team 7. The status of the request is "Assigning to an agent"
Exceptions:	None
Includes:	

1.6.2 Receive request from requester

Use Case ID:	002		
Use Case Name:	Receive Request from requester		
Created By:	Frances Nnamadim	Last Updated By:	
Date Created:	15/03/2022	Date Last Updated:	

Actors:	VRM team
Description:	This use case describes how a user receives the request and assigns it to a user
Pre-conditions:	1. A request has been created

This document is proprietary and confidential. No part of this document may be disclosed in any manner to a third party without the prior written consent of **ipNX** Nigeria Limited. It may be used only for the agreed purpose for which it has been provided.

Post-conditions:	Request is sent and received by the VRM
Normal Course:	1. SCM team receives a notification on a new request 2. The user logs into the portal and confirms the request 3. The system sends a notification via email to the requester "Hello, this is to confirm that your request has been received and it is receiving attention" 4. The status of the request changes to ***"Assigning to an agent"*** 5. The user assigns the request to an agent
Alternative Course(s):	Nil
Exceptions:	Nil

1.6.3 View Requests

Use Case ID:	003		
Use Case Name:	View Requests		
Created By:	Frances Nnamadim	Last Updated By:	
Date Created:	15/03/2022	Date Last Updated:	

Actors:	Requester
Description:	This use case describes how a requester views the status of their request
Pre-condition(s):	Request must exist
Post-condition(s):	User is able to view the status of his request
Normal Course:	1. Open browser 2. Navigate to portal URL 3. Login to portal 4. Click on requests 5. System displays the request in a tabular format with the following heading a. Request ID b. Summary c. Status

This document is proprietary and confidential. No part of this document may be disclosed in any manner to a third party without the prior written consent of **ipNX** Nigeria Limited. It may be used only for the agreed purpose for which it has been provided.

	d. Requester
Alternative Courses:	None
Exceptions:	None

1.6.4 Register as a Vendor

Use Case ID:	004		
Use Case Name:	Register as a Vendor		
Created By:	Frances Nnamadim	Last Updated By:	
Date Created:	15/03/2022	Date Last Updated:	

Actors:	Vendor
Description:	This use case describes how a vendor creates his profile on the portal
Pre-condition(s):	1. Internet access 2. URL is accessible
Post-condition(s):	Registration application acknowledgment email is sent to the user
Normal Course:	1. Open browser 2. Navigate to portal URL 3. The user selects “New Vendor Registration” 4. The system displays a form (see appendix) 5. The user fills the form and uploads the required documents (including extra documents)f 6. The system displays a message after submission 7. The system sends a notification to the VRM team via email on the registration of a new vendor 8. The system sends an email notification of registration application acknowledgment to the user 9. The system changes the status to ***pending verification*** 10. The VRM team validates the application and approves or denies 11. If the application is denied the system sends an email notification to the vendor on the status of their application

This document is proprietary and confidential. No part of this document may be disclosed in any manner to a third party without the prior written consent of **ipNX** Nigeria Limited. It may be used only for the agreed purpose for which it has been provided.

	12. If the application is approved the system sends an email to the user on the status of their application with log ID and password to access the portal 13. The system changes the status of the application to ***pending screening***
Alternative Courses:	None
Exceptions:	None

1.6.5 Login as a Vendor

Use Case ID:	005		
Use Case Name:	Login as a vendor		
Created By:	Frances Nnamadim	Last Updated By:	
Date Created:	15/03/2022	Date Last Updated:	

Actors:	Vendor
Description:	This use case describes how a vendor logs into the portal
Pre-condition(s):	1. Application has been validated 2. User has received login details
Post-condition(s):	Access to the portal
Normal Course: (First time user)	1. Open browser 2. Navigate to portal URL 3. The user enters the user Id and password 4. The system prompts the user to change their password 5. The user enters another password and selects submit 6. The user has access to the portal
Alternative Courses: (Subsequent logins)	1. Open browser 2. Navigate to portal URL 3. The user enters the user Id and password 4. The user has access to the portal

This document is proprietary and confidential. No part of this document may be disclosed in any manner to a third party without the prior written consent of **ipNX** Nigeria Limited. It may be used only for the agreed purpose for which it has been provided.

Exceptions:	None

1.6.6 Validate vendor application

Use Case ID:	006		
Use Case Name:	Validate vendor application		
Created By:	Frances Nnamadim	Last Updated By:	
Date Created:	15/03/2022	Date Last Updated:	

Actors:	VRM team
Description:	This use case describes how an admin validates the registration of a vendor
Pre-condition(s):	1. Application has been sent 2. User has received 'new application' notification
Post-condition(s):	1. Reject application 2. Approve application 3. Update status of vendor (including requester view)
Normal Course: (First time user)	1. The user logs into the portal 2. The user selects applications 3. The system displays all the application in a tabular format with the following a. ID b. Company name c. Date of submission d. Status 4. The user selects the vendor they wish to work on 5. The system displays a page of the completed form the vendor filled and a list of all documents submitted 6. The user selects the documents to download 7. The user selects a button "Verified" or "Failed" or "Needs more documents"
Alternative Courses: (Verification passed)	1. If the user selects pass, the system a. Updates the status of the vendor to ***profile verified***

This document is proprietary and confidential. No part of this document may be disclosed in any manner to a third party without the prior written consent of **ipNX** Nigeria Limited. It may be used only for the agreed purpose for which it has been provided.

	b. Sends two notifications to the vendor via email i. Notification 1 – Username and password ii. Notification 3a – Profile verified
Alternative Courses: (Verification failed)	1. If the user selects "failed" a. The system updates the status of the vendor on the system to ***profile failed*** b. The system sends a notification via email to the vendor i. Notification 3b
Alternative Courses (Need more documents)	1. If the user selects "Need more documents" 2. The user makes a note on the documents needed 3. The selects the submit button 4. The system sends a notification to the vendor via email and changes the status to "***needs more documents***" a. Notification 3c
Exceptions:	None

1.6.7 Set Screening date

Use Case ID:	006		
Use Case Name:	Set Screening date		
Created By:	Frances Nnamadim	Last Updated By:	
Date Created:	15/03/2022	Date Last Updated:	

Actors:	VRM team
Description:	This use case describes how an admin sets screening date
Pre-condition(s):	1. Registration has been verified
Post-condition(s):	1. Screen schedule (date and time) notification is sent to the vendors
Normal Course: (First time user)	1. The user logs into the portal 2. The user selects the menu bar 3. The user selects Screening

This document is proprietary and confidential. No part of this document may be disclosed in any manner to a third party without the prior written consent of **ipNX** Nigeria Limited. It may be used only for the agreed purpose for which it has been provided.

	4. The system displays a sub menu “Schedule Screening” and “Screen Vendors” 5. The user selects schedule screening 6. The system displays a calendar 7. The user selects the date and time for the screening 8. The user selects “Send Invite” 9. The system opens a field 10. The user pastes the invite link for the meeting and selects submit 11. The system automatically sends the invite via email to only new validated vendors a. Notification 2c 12. The system updates the status of the vendor to ***pending screening***
Alternative Courses:	None
Exceptions:	None

Business Requirements

The requirements in this document are prioritized as follows:

Value	Rating	Description
1	Critical	This requirement is critical to the success of the project. The project will not be possible without this requirement.
2	High	This requirement is high priority, but the project can be implemented at a bare minimum without this requirement.
3	Medium	This requirement is somewhat important, as it provides some value, but the project can proceed without it.
4	Low	This is a low priority requirement, or a “nice to have” feature, if time and cost allow it.
5	Future	This requirement is out of scope for this project and has been included here for a possible future release.

This document is proprietary and confidential. No part of this document may be disclosed in any manner to a third party without the prior written consent of **ipNX** Nigeria Limited. It may be used only for the agreed purpose for which it has been provided.

1.7 Functional Requirements

Req#	Priority	Description	Rationale	Use Case Reference	Impacted Stakeholders
General/Base Functionality					
FR-G-001	1	Requesters shall be able to request for a vendor through the portal	This is to track request that comes from the requesters and track the fulfillment of these request	1.0	SCM
FR-G-002	1	Requesters shall be able to create an account and login to the portal. The requester shall login with their email and password The requester shall create an account with the following 1. Email 2. Password 3. Full Name At the point of raising the request the requester would indicate those(email) that would be part of the screening process (Add stakeholders)	This is to enable them to access the functionalities of the system	1.0	SCM
FR-G -003	1	The system shall allow users(requesters) to monitor and view requests	This enables them to track the status of all their requests	3	Requester

This document is proprietary and confidential. No part of this document may be disclosed in any manner to a third party without the prior written consent of **ipNX** Nigeria Limited. It may be used only for the agreed purpose for which it has been provided.

Req#	Priority	Description	Rationale	Use Case Reference	Impacted Stakeholders
FR-G -004	1	The system shall allow requesters screen the vendors before vendors are on boarded appendix	This enables adequate screen of the vendors before they are onboard		Requester
FR-G -005	5	The system shall allow users evaluate a vendor after a job has been completed see	This is to track the performance of the vendors		Requeser
FR-G-006	1	The system must allow the non-authenticated users to access the registration page and complete the required details for their company(vendor) as well as user accounts(requester) See appendix of sample form The registration form would be categorized into 1. Company Information 2. Area of interest/Specialization 3. Tax and Bank details 4. Documents to accompany application When a user selects the drop-down arrow for a specialization the sub areas are displayed. When a user selects an area of specialization the system would display the selected options on the right-hand side of the page. See appendix for areas of specialization The user has the option to delete the area of specialization selected from the right side of the page	This would enable them to have access the portal to carry out certain activities	4.0	SCM
FR-G-007	1	The system must send login details to users (vendors) once their application has been	This ensures that only vendors that passes the	5.0	SCM

This document is proprietary and confidential. No part of this document may be disclosed in any manner to a third party without the prior written consent of **ipNX** Nigeria Limited. It may be used only for the agreed purpose for which it has been provided.

Req#	Priority	Description	Rationale	Use Case Reference	Impacted Stakeholders
		approved by the VRM team. Username (email address) and default password. Upon first login the system must provide the means for a user to change their password	validation stage have access to the portal		
FR-G-008	1	The system shall assign a unique identification number (ID) to each registered vendor or user			SCM
FR-G-009	1	The system must provide a mechanism for administrator (VRM team) to validate the provided details that each vendor fills in	This ensures that the details entered by each vendor is accurate and complete		SCM
FR-G-010	2	The system might oblige users to accept a User Agreement / Terms and Conditions text before granting full access to the system functionalities.	This ensures users understand the terms and conditions of being an ipNX Vendor		SCM
FR-G-011	1	The system must allow the possibility for administrator (VRM team) users to review and approve/reject registration requests; also, administrator users must be able to change status at any time.	This mechanism ensures that only approved can submit RFQ and have access to the portal	6.0	
FR-G-012	1	The system must allow the possibility for administrators (VRM team) to fix the screening date and send notification on the date and time of screening to the vendors. The system would update the status of the vendor to ***"Pending screening"***	To adequately inform the vendors on the date for screening.	7.0	SCM

This document is proprietary and confidential. No part of this document may be disclosed in any manner to a third party without the prior written consent of **ipNX** Nigeria Limited. It may be used only for the agreed purpose for which it has been provided.

Req#	Priority	Description	Rationale	Use Case Reference	Impacted Stakeholders
FR-G-013	1	The system must allow different users (admin and requesters) screen the vendors. When a user passes the screening exercise the system would update the status of the vendor to "***Screening passed"*** *and send a notification to the vendor* When a user passes the screening exercise the system would update the status of the vendor to "***Screening failed"*** *and send a notification to the vendor*	This ensures that the vendors are thoroughly screened by both the requesting department and SCM		SCM
FR-G-014	1	The system must allow HOD user to review all screened vendors			SCM
FR-G-015	1	The system must allow the HOD review screened vendors and the ability to approve, defer or deny a screened vendor. The system shall allow the HOD to input a note on the reason for deferring or denying a screened vendor			SCM
FR-G-016	1	The system shall allow members of tender's board review and approve each vendor one after the other when the HOD has certified them okay			SCM
FR-G-017	1	When a vendor has been approved by tender's board the system should send a notification to the vendor and the system would update the status of the vendor to ***Active***			SCM

This document is proprietary and confidential. No part of this document may be disclosed in any manner to a third party without the prior written consent of **ipNX** Nigeria Limited. It may be used only for the agreed purpose for which it has been provided.

<table>
<tr><th>Req#</th><th>Priority</th><th>Description</th><th>Rationale</th><th>Use Case Reference</th><th>Impacted Stakeholders</th></tr>
<tr><td>FR-G-018</td><td>1</td><td>The vendor shall be able to participate in the RFQ. When they select RFQ the system shall display a list of RFQ.

The vendor shall see the following details of an RFQ in a tabular format

<table><tr><td>Action</td><td>RFQ ID</td><td>RFQ Name</td><td>Status</td><td>Remaining days</td></tr></table>
1. Action: The action column shall have the following options
a. Participate
b. Regret
c. View
2. RFQ ID
3. RFQ Name
4. Status
5. Remaining days

Under the column action the user shall have the following options
a. Participate
b. Regret
c. View

When a user selects regret, the system must provide a field for the vendor to write regret remarks</td><td></td><td></td><td>Procurement team</td></tr>
</table>

This document is proprietary and confidential. No part of this document may be disclosed in any manner to a third party without the prior written consent of **ipNX** Nigeria Limited. It may be used only for the agreed purpose for which it has been provided.

Req#	Priority	Description	Rationale	Use Case Reference	Impacted Stakeholders
		When a user selects view the system shall enable the user view details of the RFQ (e.g list of items, technical documentation)			
FR-G-019	1	The system shall allow the procurement team to create an RFQ which when it is created a notification shall be sent to all vendors that it is applicable to			Procurement team
FR-G-020	1	The system should have database of all pre-qualified vendors			SCM
FR-G-021	1	The system should allow the download of all documents uploaded		5.1.6	SCM
FR-G-022	1	The system shall categorize the vendors based on the selected area of specialization 1. Supplies 2. FTTH 3. Activation 4. WiFi 5. Upcountry Radio 6. Fire & Safety (FM 200) 7. Call-out Maintenance 8. Freelance IT Software 9. Others See appendix for sub categories 7.3			SCM
Security Requirements					

This document is proprietary and confidential. No part of this document may be disclosed in any manner to a third party without the prior written consent of **ipNX** Nigeria Limited. It may be used only for the agreed purpose for which it has been provided.

Req#	Priority	Description	Rationale	Use Case Reference	Impacted Stakeholders
FR-S-001	1	All system users (System Administrator, user department/ Unit, vendors, requesters) must provide their username and password to be successfully authenticated and verified.			SCM
FR-S-002	2	The system should implement a predefined session timeout mechanism. This means that after a period, inactive users will be automatically logged out.			SCM
FR-S-003	1	System must support appropriate security controls, including user roles with predefined access rights which control the data and functionality each user has access to			SCM
FR-S-004	1	System must be able to guarantee that its data is not disclosed to unauthorized persons or processes.			SCM
FR-S-005	1	The portal shall be accessible by the public	This ensures that the partners/vendors can access it from anywhere		SCM
Reporting Requirements					
FR-R-001	1	The system shall enable user to view a report on the total number of vendors and following details of all vendors 1. Company Name 2. Company Address 3. Company Email Address			SCM

This document is proprietary and confidential. No part of this document may be disclosed in any manner to a third party without the prior written consent of **ipNX** Nigeria Limited. It may be used only for the agreed purpose for which it has been provided.

Req#	Priority	Description	Rationale	Use Case Reference	Impacted Stakeholders
		4. Company Phone Number 5. Contact Person 6. Regions (PHC, Lagos, Abuja) 7. Category 8. Tin Number 9. Screening Date 10. Onboarding Date,			
FR-R-002	5	History of Vendors Transactions over a period and Award Value for FTTH jobs, BBExt Jobs, E2E Activation Jobs, etc. Since we will be adding RFQ and may further synchronize with Paric.			SCM
FR-R-003	1	Dormant and Active Vendors / Contractors over a period of one year / half yearly.			SCM
FR-R-004	5	Vendors Performance Report for Suppliers / Contractors. For Quarterly, half yearly and yearly.			SCM
Usability Requirements					
FR-U-001	1	User interface of the portal shall be responsive, allowing for proper display on tablet, laptop, and desktop devices.	User experience	Nil	SCM
FR-U-002	1	The system should be able to support various kinds of output reports in different formats, like XLS, PDF, TXT, DOC, CSV, etc.	This ensures that users are not restricted in the sort of documents they upload	Nil	SCM
Audit Requirements					

This document is proprietary and confidential. No part of this document may be disclosed in any manner to a third party without the prior written consent of **ipNX** Nigeria Limited. It may be used only for the agreed purpose for which it has been provided.

Req#	Priority	Description	Rationale	Use Case Reference	Impacted Stakeholders
FR-A-001	1	The system should support a detailed audit trail log that registers all user login information and any other activity affecting the database or any action performed by the user on the system.	To keep track	Nil	SCM
FR-A-002	1	System must be able to audit all user actions. System should ensure that all actions performed on received/stored data are recorded, keeping track of actors, date/time, input/output data and any other information necessary to allow specialized personnel to monitor and fully reconstruct a transaction.	To keep track	NIL	SCM
Notification					
FR-N-001		The email notification mechanism of the Module supports a dedicated notification being dispatched to the users when specific actions are performed.	By the notification mechanism, the users are kept informed for all transactions	Nil	SCM
FR-N-002	1	The system must send notification via email to users after application has been completed and after application has been approved or denied or more documents are required		See Notification 3a, b & C	SCM
FR-N-003	1	The system must send notification via email when a screening is scheduled to the vendors, the requesters, the stakeholders with date, link and time		See Notification 2c	SCM

This document is proprietary and confidential. No part of this document may be disclosed in any manner to a third party without the prior written consent of **ipNX** Nigeria Limited. It may be used only for the agreed purpose for which it has been provided.

Req#	Priority	Description	Rationale	Use Case Reference	Impacted Stakeholders
FR-N-004	1	The system must send a notification via email when the screening is complete to the vendors on the screening status and a message to HOD		See Notification 2d	SCM
FR-N-005	1	The system must send notification via email when the HOD certifies that the screening exercise is okay to Tenders board to approve the vendors		See Notification 4	SCM
FR-N-006	1	The system shall send a notification via email to the procurement team when a vendor accepts to participate in the RFQ			Procurement team
FR-N-007		The system shall send a notification via email to the procurement team when a vendor is not accepting the participation.			Procurement team

1.8 Non-Functional Requirements

ID	Requirement
NFR-001	System must be able to cope with the expected load and traffic.
NFR-002	Data Base model should be relational.
NFR-003	System must be built in a modular approach that will allow the addition of new functional modules without impacting the overall system functionality. The need for this SW type of architecture is to allow the development of the system by different developers, to avoid possible lockdowns or delays in system
NFR-004	System must ensure the integrity of the transmitted data.

This document is proprietary and confidential. No part of this document may be disclosed in any manner to a third party without the prior written consent of **ipNX** Nigeria Limited. It may be used only for the agreed purpose for which it has been provided.

NFR-005	The system must have the storage capability to store all the documents uploaded.
NFR-006	System must follow state-of-the-art interoperability standards so that its integration or communication with external systems can be achieved

This document is proprietary and confidential. No part of this document may be disclosed in any manner to a third party without the prior written consent of **ipNX** Nigeria Limited. It may be used only for the agreed purpose for which it has been provided.

Appendices

1.9 List of documents to be uploaded for sign up

1. Company Profile
2. CAC Document
3. Form CO2
4. Form CO7
5. Vat Clearance Certificate
6. Tax Clearance Certificate
7. Evidence of Business Done in form of Purchase Order/ Per forma Invoice
8. Partnership Certificates from OEM's
9. License from Nigerian Recognized Bodies, etc

This document is proprietary and confidential. No part of this document may be disclosed in any manner to a third party without the prior written consent of **ipNX** Nigeria Limited. It may be used only for the agreed purpose for which it has been provided.

1.10 Registration Wireframe

This document is proprietary and confidential. No part of this document may be disclosed in any manner to a third party without the prior written consent of ipNX Nigeria Limited. It may be used only for the agreed purpose for which it has been provided.

VRM Portal

Contractors/Vendors Registration

Login

Company Information

Name of Company*

Full Name*

Office Address*

Is the firm/company ☑ Registered ☐ Incorporated

Start date of Business

Are you doing business as ☑ An Individual ☐ A Company

Phone Number

Email Address

Date of Registration

Give brief details of the type and value of work you have done since the past 24 months

Select your area of interest/specialization*

Expand All | Close All

- ☐ Supplies ▶
- ☐ FTTH ▼
  - ☐ Backbone
  - ☐ BBExt
  - ☐ Survey
  - ☐ MSP
- ☐ Activation ▶
- ☐ Wifi
- ☐ Upcountry Radio
- ☐ Fire & Safety(FM 200)
- ☐ Call-out Maintenance
- ☐ Freelance IT Software
- ☐ Others

No category has been selected yet

This document is proprietary and confidential. No part of this document may be disclosed in any manner to a third party without the prior written consent of **ipNX** Nigeria Limited. It may be used only for the agreed purpose for which it has been provided.

Tax and Bank details *

Are you prepared to extend credit facilities to ipNX ☑ Yes ☐ No

Tax Identification No.

VAT Registration No.

Bank Name

Bank Branch

Swift Code

Sort Code

Current A/C Number

Account Name

Documents to Accompany Application*

Name	Remarks	Document	Name	Remarks	Document
Company Profile		upload	Form CO2		upload
Form CO7		upload	Vat Clearance Certificate		upload
Tax Clearance Certificate		upload	Per forma Invoice		upload
Partnership Certificates from OEM's		upload	License from Nigerian Recognized Bodies		upload
Partnership Certificates from OEM's		upload			

Save As Draft & Print

Submit For Approval

1.11 Area of Specialization/Categories of Vendors

1. Supplies ----------Drop down: (Diesel, Laptop, Tyres, Inverter, Batteries, UPS, Stabilizers, Stationaries, Consumables, Office Equipment, Fibre Optic Materials, Electrical Materials, Mechanical materials, House hold Equipment, etc.

This document is proprietary and confidential. No part of this document may be disclosed in any manner to a third party without the prior written consent of **ipNX** Nigeria Limited. It may be used only for the agreed purpose for which it has been provided.

2. FTTH ----------Dropdown: (Backbone, BBExt., Survey, MSP, E2E Activation, Wifi Mesh / Geek Squad)
3. Wifi
4. Upcountry Radio
5. Logistics
6. Fumigation and Cleaning Services
7. Fire & Safety (FM 200)
8. Call- out Maintenance
9. Freelance (IT Software)
10. Facility Management
11. Hospitality
12. Electrical Technician
13. Mechanical Technician
14. Painter
15. Carpenter
16. Plumber
17. Gardener
18. CCTV Installer
19. Others; List……..

This document is proprietary and confidential. No part of this document may be disclosed in any manner to a third party without the prior written consent of **ipNX** Nigeria Limited. It may be used only for the agreed purpose for which it has been provided.

1.12 Tenders Board List

- Bimpe Olaleye - **GED, COMMERCIALS**
- Shade Efiong-Bassey - **GED, HR & CS**
- Rita Okoji- Adesoji - **Head, SCM**
- Seun Oluboyo - **Chief Technical Officer**
- Joy Eholor - **Regional Head, Business Operations – Sales (EAST)**
- George Aremu - **Chief Finance Officer**

1.13 Status Definition

S/N	Status	Definition	Notification Message to Vendors	Notification Recipient	Notification to Stakeholders
1	Assigning to an agent	After a request has been submitted by the requester and the status is changed to "Assigning to an agent"	**N/A**	Requester	*Dear Team,Thank you for your request. It is being attended to. You will receive updates as it progresses.*
2	Pending Verification	When a vendor registers and the profile has not been verified	*Dear Partner,* *This is to inform you that the company registration documents submitted have been received and they are being verified.* *Updates will be shared accordingly.* *Thank you.*	Vendor Requester	**N/A**

This document is proprietary and confidential. No part of this document may be disclosed in any manner to a third party without the prior written consent of **ipNX** Nigeria Limited. It may be used only for the agreed purpose for which it has been provided.

S/N	Status	Definition	Notification Message to Vendors	Notification Recipient	Notification to Stakeholders
3	Profile Verified	When the vendors profile has been validated by the VRM team by selecting "pass"	*Dear Partner,* *This is to notify you that your profile has been verified and you are proceeding to the next stage.* *Further updates will be communicated accordingly.* *Thank you.*	*Vendor* *Requester*	*We have gotten some vendors and we are currently collating their registration documents to proceed for their screening & evaluation.*
4	Profile Failed	When the vendors profile has been validated by the VRM team by selecting "failed"	*Dear Partner,* *We are sorry to inform you that your Company profile did not meet our requirement, hence you will not proceed with the screening exercise to the next stage.* *Thank you*	*Vendor* *Requester*	**N/A**
5	Need more documents	When the vendors profile has been validated by the VRM team by selecting "need more documents"	*Dear Partner,* *In other to complete our documentation, kindly upload the following documents as they were missing on your initial upload:* *(Mention missing documents)*	*Vendor* *Requester*	**N/A**
6	Pending Screening	When the VRM team schedules the screening date	*Dear Partner,* *This is to inform you that the company registration documents submitted are complete and you will be scheduled for a Screening & Evaluation Exercise.* *A date will be communicated to you in due time.* *Thank you for choosing to partner with us.*	*Vendor* *Requesters*	*Dear Team,* *Screening & Evaluation exercise date has been scheduled. You will receive full details via mail.*

This document is proprietary and confidential. No part of this document may be disclosed in any manner to a third party without the prior written consent of **ipNX** Nigeria Limited. It may be used only for the agreed purpose for which it has been provided.

S/N	Status	Definition	Notification Message to Vendors	Notification Recipient	Notification to Stakeholders
7	Screening Passed	If the average score is greater than or equal to 70%	*Dear Partner,* *Sequel to the Screening & Evaluation Exercise carried out with your Company we are pleased to inform you that you were successful. You will proceed to the next stage* *Thank you*	*Vendor* *Requesters*	**N/A**
8	Screening Failed	If the average score is less than 70%	*Dear Partner,* *We regret to inform you that you were not successful in the Screening & Evaluation Exercise with our Company*	*Vendors* *Requesters*	**N/A**
9	Approved	*When the HOD approves the screened vendors*	***N/A***	*Requesters* *VRM Team*	*These profiles have been approved. Kindly go ahead and schedule screening for the approved contractor's profile.*
10	Defer	*When the HOD defers the screened vendors*	***N/A***	*Requesters* *VRM Team*	*These profiles have been deferred because "reason message"*
11	Denied	*When the HOD denies the screened vendors*	***N/A***	*Requesters* *VRM Team*	*These profiles have been deferred because "reason message"*

This document is proprietary and confidential. No part of this document may be disclosed in any manner to a third party without the prior written consent of **ipNX** Nigeria Limited. It may be used only for the agreed purpose for which it has been provided.

S/N	Status	Definition	Notification Message to Vendors	Notification Recipient	Notification to Stakeholders
9	Active	When Tenders Board approves the screened vendors	*No message across to Vendor, but they will receive Acceptance letters as soon as their approval document is received from the HOD.*	Vendors Requesters	*Dear Team, kindly note that the approval of the contractors / Vendors have been secured, you can go ahead and plan for the onboarding / induction proper.*

1.14 Other Notification Messages

S/N	Activity	Notification Recipient	Notification Message
1	Screening Passed	HOD	Kindly approve, defer or reject Company profiles for the following Vendors for XXXX purposes.
2	Screened Scheduled	Vendors Requesters HOD	**Dear Partners,** Kindly find the details below. Topic: Screening & Evaluation Exercise with Fumigation Vendor Time: May 25, 2022 01:00 – 01:30PM PM West Central Africa……The date & time

This document is proprietary and confidential. No part of this document may be disclosed in any manner to a third party without the prior written consent of **ipNX** Nigeria Limited. It may be used only for the agreed purpose for which it has been provided.

			Join Zoom Meeting https://us02web.zoom.us/j/85995428924?pwd=S0dRdmF6bEtoMkplaHlPUUlGVkJxUT09.....zoom link Meeting ID: 859 9542 8924 Passcode: 227083

1.15 Data to be sent to PARIC

1) Name of company
2) Company address
3) Categories of business
4) Details of jobs awarded
5) Contact persons
6) Contact Number
7) Contact Email Address

This document is proprietary and confidential. No part of this document may be disclosed in any manner to a third party without the prior written consent of **ipNX** Nigeria Limited. It may be used only for the agreed purpose for which it has been provided.

1.16 Evaluation Sheet

Non- Technical Evaluation SHEET
The purpose of this exercise is to assess vendor and contractor competency and organizational fit

Technical section

	ES	RATINGS					WEIGHT
1	**edge Demonstrated** **ıred** by: a. Technical Knowledge b. Relevant Skills to the service						
		Outstanding (5)	Above Average (4)	Average (3)	elow Average (2)	Poor (1)	**20**
2	**ence in the field** ıred by: a. Years of experience in the industry						
		16yrs & above (5)	11-15yrs (4)	6-10yrs (3)	3-5yrs (2)	1-2yrs (1)	**15**
3	**ty Control** ure by: a. Quality control process b. Quality control personnel						
		Outstanding (5)	Above Average (4)	Average (3)	elow Average (2)	Poor (1)	**15**

This document is proprietary and confidential. No part of this document may be disclosed in any manner to a third party without the prior written consent of **ipNX** Nigeria Limited. It may be used only for the agreed purpose for which it has been provided.

4	**nce** red by: a. Value of insurance cover b. Ease of making claims						
		Outstanding (5)	Above Average (4)	Average (3)	elow Average (2)	Poor (1)	**20**
							70

***ip*NX NIGERIA LIMITED**

Commercial section

5	**Credit Facility** Measured by:						

This document is proprietary and confidential. No part of this document may be disclosed in any manner to a third party without the prior written consent of **ipNX** Nigeria Limited. It may be used only for the agreed purpose for which it has been provided.

	a. How many days credit a supplier can give after good negotiation of service rendered	>30days (5)	=30days (4)	=<15days (3)	=7days (2)	<7days (1)	**15**
6	**Customer Support** Measured by: a. Response time b. After Sales service c. Communication skills						
		Outstanding (5)	Above Average (4)	Average (3)	Below Average (2)	Poor (1)	**10**
7	**Organisational Structure** Measured by: a. The size of the organisation						
		7 tiers (5)	5-6tiers (4)	4 tiers (3)	3 tiers (2)	1-2 tiers (1)	**5**
							30
						Overall	**100**

This document is proprietary and confidential. No part of this document may be disclosed in any manner to a third party without the prior written consent of **ipNX** Nigeria Limited. It may be used only for the agreed purpose for which it has been provided.

Technical Evaluation SHEET

The purpose of this exercise is to assess vendor and contractor competency and organizational fit

Technical section

	ES	RATINGS					WEIGHT
1	**edge Demonstrated Measured** by: a. Technical Knowledge b. Relevant Skills to the service						
		Outstanding (5)	bove Average (4)	Average (3)	ow Average (2)	Poor (1)	**20**
2	**ence in the field** ured by: a. Years of experience in the industry						
		16yrs & above (5)	11-15yrs (4)	6-10yrs (3)	3-5yrs (2)	1-2yrs (1)	**15**
3	**ty Control** ure by: a. Quality control process b. Quality control personnel						
		Outstanding (5)	bove Average (4)	Average (3)	ow Average (2)	Poor (1)	**15**
4	**t Reporting** ured by:						

This document is proprietary and confidential. No part of this document may be disclosed in any manner to a third party without the prior written consent of **ipNX** Nigeria Limited. It may be used only for the agreed purpose for which it has been provided.

	a. Work process submitted b. Core status report c. Budget conformance	Outstanding (5)	bove Average (4)	Average (3)	ow Average (2)	Poor (1)	**10**
5	**t Workload** ıred by: a. Ability to execute multiple jobs well simultaneously						
		Outstanding (5)	bove Average (4)	Average (3)	ow Average (2)	Poor (1)	**10**

***ip*NX NIGERIA LIMITED**

Commercial section

5	**Credit Facility** Measured by: a. How many days credit a supplier can give after good negotiation of service rendered						
		>30days (5)	=30days (4)	=<15days (3)	=7days (2)	<7days (1)	**10**
6	**Customer Support** Measured by: a. Response time b. After Sales service c. Communication skills						
		Outstanding (5)	Above Average (4)	Average (3)	Below Average (2)	Poor (1)	**5**
7	**Organisational Structure**						

This document is proprietary and confidential. No part of this document may be disclosed in any manner to a third party without the prior written consent of **ipNX** Nigeria Limited. It may be used only for the agreed purpose for which it has been provided.

	Measured by: a. The size of the organisation	7 tiers (5)	5-6tiers (4)	4 tiers (3)	3 tiers (2)	1-2 tiers (1)	**5**
8	**HSE** Measured by: a. Trained personnel b. Certification	Outstanding (5)	Above Average (4)	Average (3)	Below Average (2)	Poor (1)	**10**
							30
						Overall	**100**

This document is proprietary and confidential. No part of this document may be disclosed in any manner to a third party without the prior written consent of **ipNX** Nigeria Limited. It may be used only for the agreed purpose for which it has been provided.