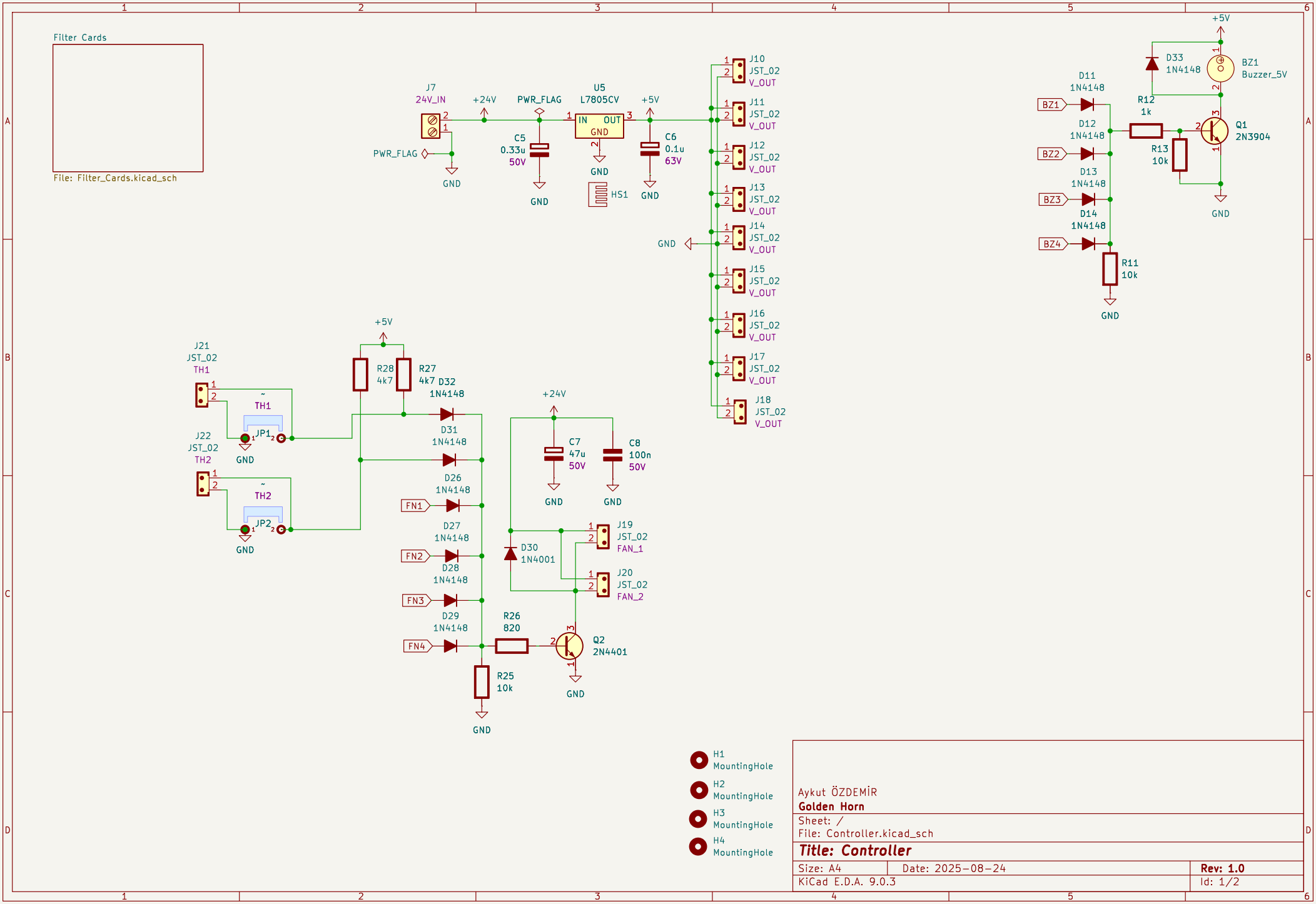
Filter Cards
File: Filter_Cards.kicad_sch
J7
24V_IN
+24V
PWR_FLAG
U5
L7805CV
IN
OUT
GND
+5V
C5
0.33u
50V
C6
0.1u
63V
HS1
J10
JST_02
V_OUT
J11
J12
J13
J14
J15
J16
J17
J18
J21
JST_02
TH1
J22
JST_02
TH2
JP1
JP2
R28
4k7
R27
4k7
D32
1N4148
D31
D26
D27
D28
D29
FN1
FN2
FN3
FN4
R26
820
R25
10k
Q2
2N4401
C7
47u
50V
C8
100n
50V
D30
1N4001
J19
JST_02
FAN_1
J20
JST_02
FAN_2
D11
D12
D13
D14
BZ1
BZ2
BZ3
BZ4
R12
1k
R13
10k
R11
10k
D33
BZ1
Buzzer_5V
Q1
2N3904
H1
MountingHole
H2
MountingHole
H3
MountingHole
H4
MountingHole
Aykut ÖZDEMİR
Golden Horn
Sheet: /
File: Controller.kicad_sch
Title: Controller
Size: A4
Date: 2025-08-24
Rev: 1.0
KiCad E.D.A. 9.0.3
Id: 1/2

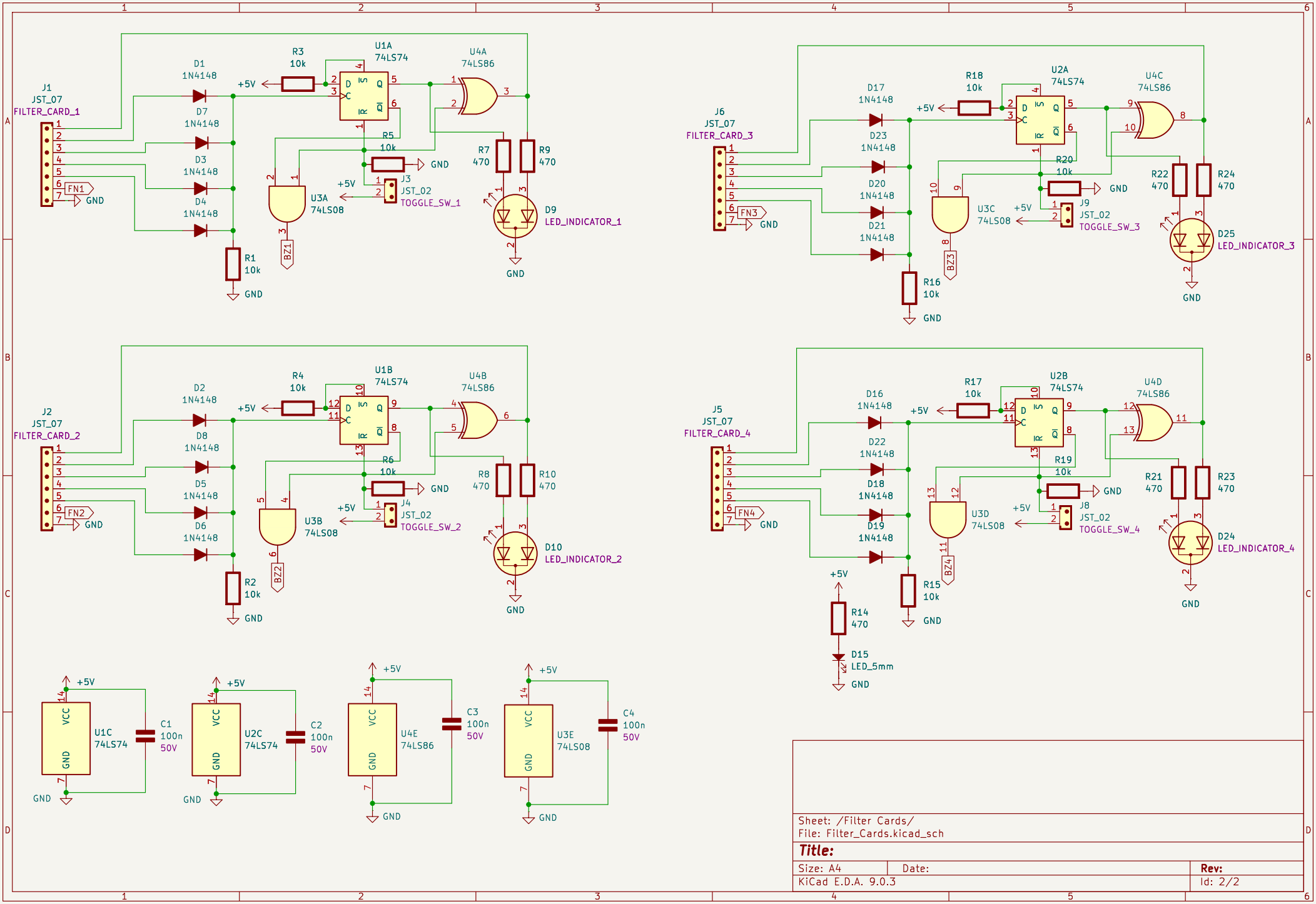

Sheet: /Filter Cards/
File: Filter_Cards.kicad_sch

Title:

Size: A4	Date:	Rev:
KiCad E.D.A. 9.0.3		Id: 2/2