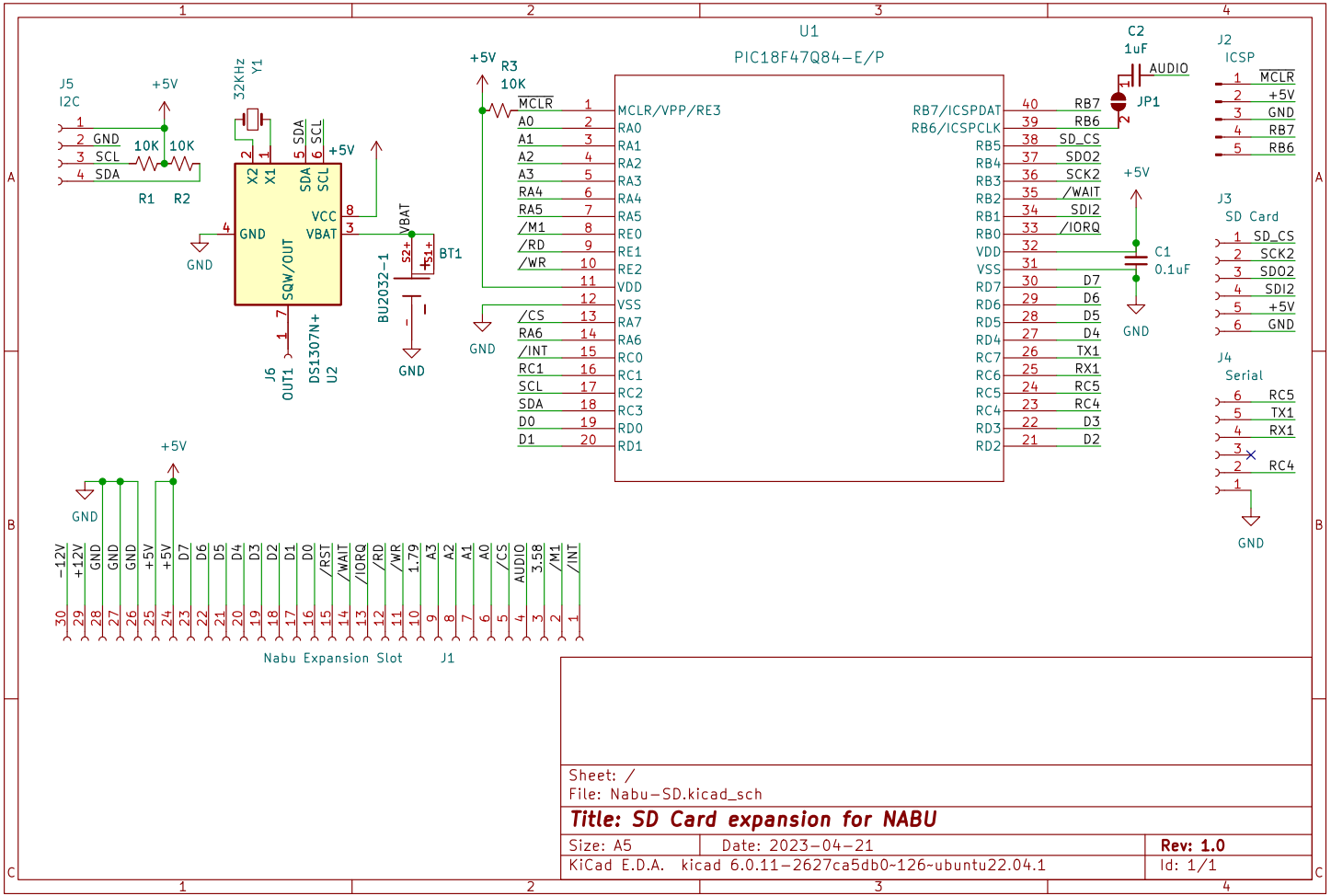

Sheet: /
File: Nabu-SD.kicad_sch

Title: SD Card expansion for NABU

Size: A5	Date: 2023-04-21	**Rev: 1.0**
KiCad E.D.A. kicad 6.0.11-2627ca5db0~126~ubuntu22.04.1		Id: 1/1