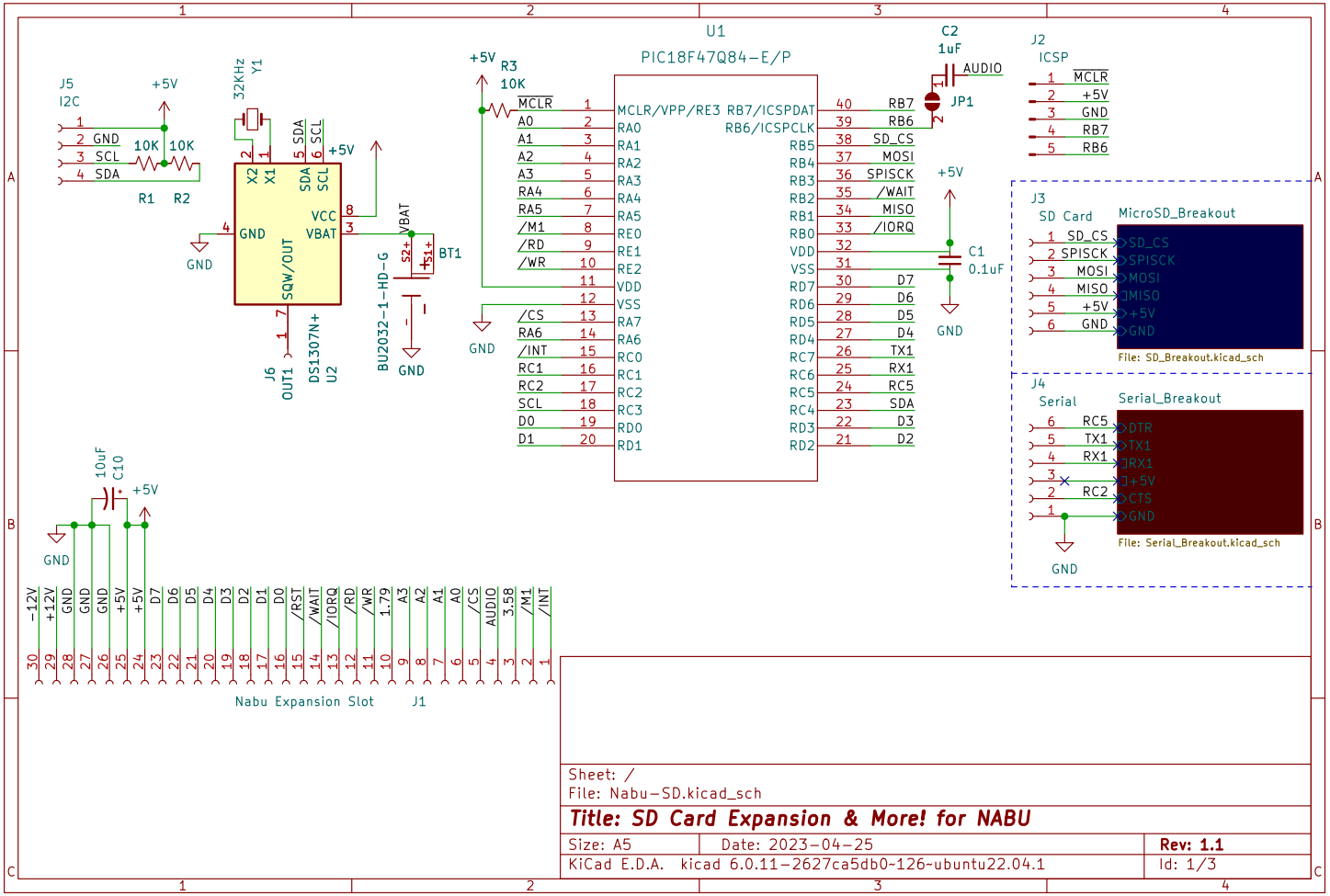

Sheet: /
File: Nabu-SD.kicad_sch

Title: SD Card Expansion & More! for NABU

Size: A5	Date: 2023-04-25	Rev: 1.1
KiCad E.D.A. kicad 6.0.11-2627ca5db0~126~ubuntu22.04.1		Id: 1/3

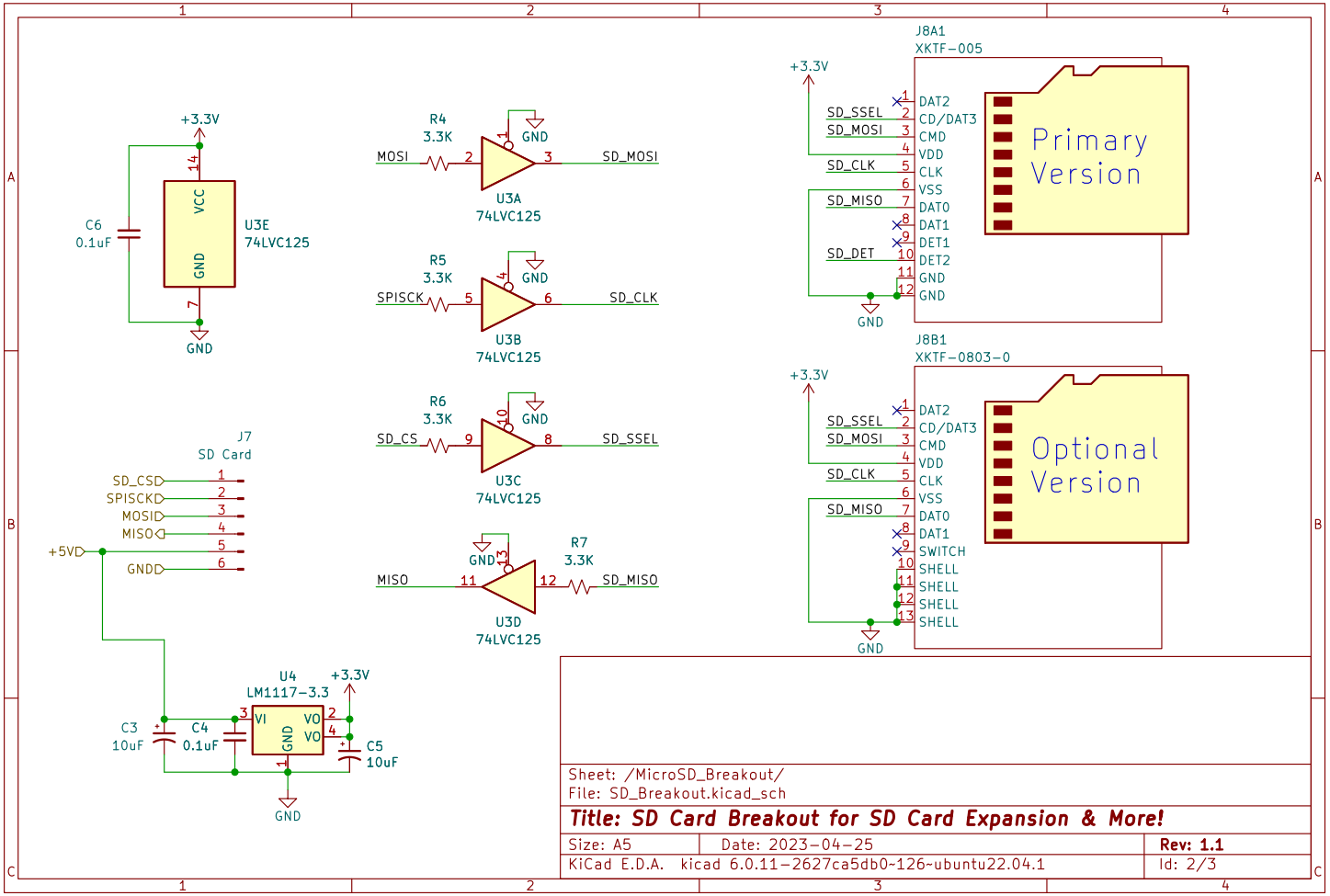
+3.3V
C6
0.1uF
VCC
GND
U3E
74LVC125
GND
R4
3.3K
MOSI
GND
SD_MOSI
U3A
74LVC125
R5
3.3K
SPISCK
GND
SD_CLK
U3B
74LVC125
R6
3.3K
SD_CS
GND
SD_SSEL
U3C
74LVC125
GND
R7
3.3K
MISO
SD_MISO
U3D
74LVC125
J8A1
XKTF-005
+3.3V
SD_SSEL
SD_MOSI
SD_CLK
SD_MISO
SD_DET
DAT2
CD/DAT3
CMD
VDD
CLK
VSS
DAT0
DAT1
DET1
DET2
GND
GND
Primary Version
GND
J8B1
XKTF-0803-0
+3.3V
SD_SSEL
SD_MOSI
SD_CLK
SD_MISO
DAT2
CD/DAT3
CMD
VDD
CLK
VSS
DAT0
DAT1
SWITCH
SHELL
SHELL
SHELL
SHELL
Optional Version
GND
J7
SD Card
SD_CS
SPISCK
MOSI
MISO
+5V
GND
U4
LM1117-3.3
+3.3V
VI
VO
VO
GND
C3
10uF
C4
0.1uF
C5
10uF
GND
Sheet: /MicroSD_Breakout/
File: SD_Breakout.kicad_sch
Title: SD Card Breakout for SD Card Expansion & More!
Size: A5
Date: 2023-04-25
Rev: 1.1
KiCad E.D.A. kicad 6.0.11-2627ca5db0~126~ubuntu22.04.1
Id: 2/3

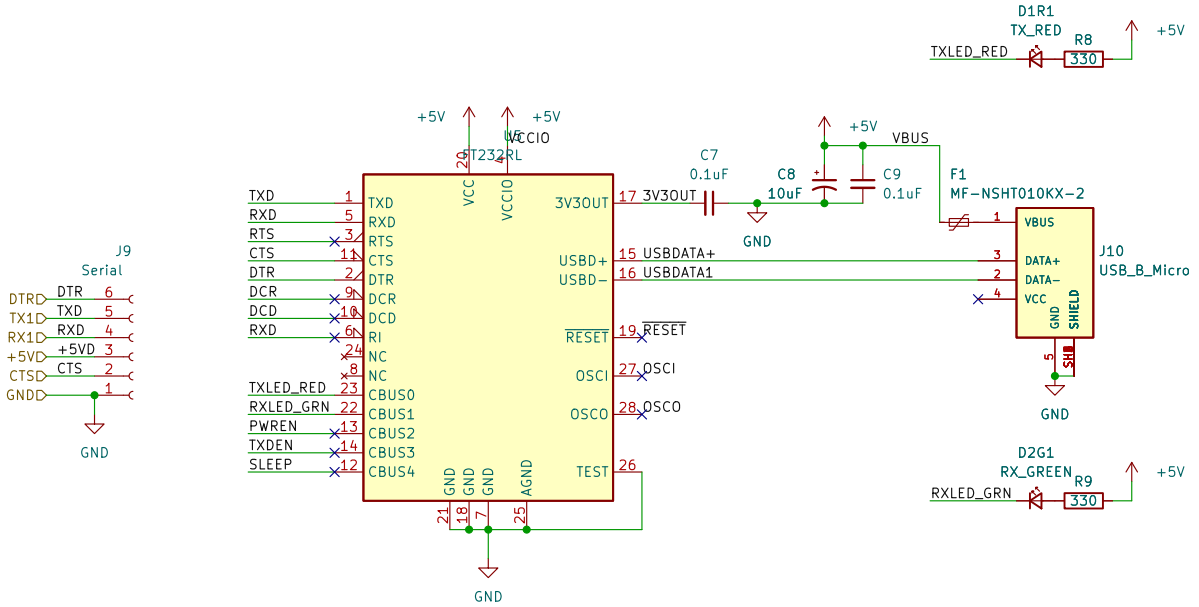

Sheet: /Serial_Breakout/
File: Serial_Breakout.kicad_sch

Title: Serial Breakout for SD Card Expansion & More!

Size: A5	Date: 2023-04-25	Rev: 1.1
KiCad E.D.A. kicad 6.0.11-2627ca5db0~126~ubuntu22.04.1		Id: 3/3