Project: Internal Alterations and Addition
Address: 9 Summerhills Ave. Lorne
Client: Rocco & Leah Mezzatesta
Drawing Issue: Issue for Construction
Issue Date: November 2022

Drawing List

DWG No.	Drawing Name
A001	Cover
A002	GF Existing & Demolition
A003	B1 Existing & Demolition
A004	Site Plans
A005	Ground Floor Plan
A006	Lower Floor Plan
A007	Roof Plan
A008	Electrical Plans
A009	Reflected Ceiling Plan

Drawing List

DWG No.	Drawing Name
A010	Elevations
A011	Elevations
A012	Section A
A013	Section B
A014	Section C
A015	Door & Window Schedule
A016	Door & Window Schedule
A017	BAL Requirements

General Notes *(NCC 2019 BCA VOL 2)*
All materials and work practices shall comply with, but not limited to the Building Regulations 2018, National Construction Code Series 2019 Building Code of Australia Vol 2 and all relevant current Australian Standards (as amended) referred to therein.

Unless otherwise specified, the term BCA shall refer to National Construction Code Series 2019 Building Code of Australia Volume 2.

All materials and construction practice shall meet the Performance Requirements of the BCA. Where a performance solution is proposed then, prior to implementation or installation, it first must be assessed and approved by the Relevant Building Surveyor as meeting the Performance Requirements of the BCA.

Glazing, including safety glazing, shall be installed to a size, type and thickness so as to comply with:
- *BCA Part 3.6 for Class 1 and 10 Buildings within a design wind speed of not more than N3; and*
- *BCA Vol 1 Part B1.4 for Class 2 and 9 Buildings.*

Waterproofing of wet areas, being bathrooms, showers, shower rooms, laundries, sanitary compartments and the like shall be provided in accordance with AS 3740-2010: Waterproofing of Domestic Wet Areas.

These Drawings shall be read in conjunction with any House Energy Rating (HERS) report and shall be constructed in accordance with the stamped plans endorsed by the accredited Thermal Performance Assessor without alteration.

Step sizes (other than for spiral stairs) to be:
- *Risers (R) 190mm maximum and 115mm minimum*
- *Going (G) 355mm maximum and 240mm minimum*
- *2R + 1G = 700mm maximum and 550mm minimum*
- *with less than 125mm gap between open treads.*

All treads, landings and the like to have a slip-resistance classification of P3 or R10 for dry surface conditions and P4 or R11 for wet surface conditions, or a nosing strip with a slip-resistance classification of P3 for dry surface conditions and P4 for wet surface conditions.

Provide barriers where change in level exceeds 1000mm above the surface beneath landings, ramps and/or treads. Barriers (other than tensioned wire barriers) to be:
- *1000mm min. above finished surface level of balconies, landings or the like, and*
- *865mm min. above finished surface level of stair nosing or ramp, and*
- *vertical with less than 125mm gap between, and*
- *any horizontal element within the barrier between 150mm and 760mm above the floor must not facilitate climbing where changes in level exceeds 4000mm above the surface beneath landings, ramps and/or treads.*

Wire barrier construction to comply with NCC 2019 BCA Part 3.9.2.3 for Class 1 and 10 Buildings and NCC 2019 BCA Volume 1 Part D2.16 for other Classes of Buildings.

Top of hand rails to be minimum 865mm vertically above stair nosing and floor surface of ramps.

Window sizes nominated are nominal only. Actual size may vary according to manufacturer. Windows to be flashed all around.

Where the building (excludes a detached Class 10) is located in a termite prone area the building is to be provided with a termite management system.
Concrete stumps:
- *up to 1400mm long to be 100mm x 100mm (1 No. H.D. Wire)*
- *1401mm to 1800mm long to be 100mm x 100mm (2 No. H.D. Wires)*
- *1801mm to 3000mm long to be 125mm x 125mm (2 No. H.D. Wires)*
- *100mm x 100mm stumps exceeding 1200mm above ground level to be braced where no perimeter base brickwork provided.*

Buildings in marine or other exposure environments shall have masonry units, mortar and all built in components and the like complying with the durability requirements of Table 4.1 of AS 4773.1-2015 'Masonry in small buildings' Part 1: Design.

All stormwater to be taken to the legal point of discharge to the Relevant Authorities approval.

These drawings shall be read in conjunction with all relevant structural and all other consultants' drawings/details and with any other written instructions issued in the course of the contract.

Site plan measurements in metres – all other measurements in millimetres unless noted otherwise.

Figured dimensions take precedence over scaled dimensions.

The Builder shall take all steps necessary to ensure the stability and general water tightness of all new and/or existing structures during all works.

The Builder and Subcontractors shall check and verify all dimensions, setbacks, levels and specifications and all other relevant documentation prior to the commencement of any works. Report all discrepancies to this office for clarification.

Installation of all services shall comply with the respective supply authority requirements.

The Builder and Subcontractor shall ensure that all stormwater drains, sewer pipes and the like are located at a sufficient distance from any buildings footing and/or slab edge beams so as to prevent general moisture penetration, dampness, weakening and undermining of any building and its footing system.

These plans have been prepared for the exclusive use by the Client of ***"Meenks Ink"*** *('The Designer') for the purpose expressly notified to the Designer. Any other person who uses or relies on these plans without the Designer's written consent does so at their own risk and no responsibility is accepted by the Designer for such use and/or reliance.*

A building Permit is required prior to the commencement of these works. The release of these documents is conditional to the Owner obtaining the required Building Permit.

The Client and/or the Client's Builder shall not modify or amend the plans without the knowledge and consent of ***Paul Meenks*** *except where a Registered Building Surveyor makes minor necessary changes to facilitate the Building Permit application and that such changes are promptly reported back to* ***Paul Meenks****.*

The approval by this office of a substitute material, work practice, variation or the like is not an authorisation for its use or a contract variation. All variations must be accepted by all parties to the agreement and where applicable the Relevant Building Surveyor prior to implementing any variation.

STORMWATER:
100mm DIA. Class 6 UPVC stormwater line laid to a minimum grade of 1:100 and connected to the legal point of stormwater discharge. Provide inspection openings at 9000mm C/C and at each change of direction.

The cover to underground stormwater drains shall be not less than
- *100mm under soil*
- *50mm under paved or concrete areas*
- *100mm under unreinforced concrete or paved driveways*
- *75mm under reinforced concrete driveways*

Town Planning Permit & Endorsed Plans:
These works are subject to a town planning permit & must comply in all respects with the planning permit & endorsed planning drawings.
Refer planning permit no: 22/0314 / DD22/149571

SITE ENVIRONMENT DESIGN INFORMATION:

Based on planning overlays, this site is designated as a bushfire prone area
Site Bushfire Attack Assessment (simplified method)
Reference document 'AS 3959-2009 construction of buildings in bush fire prone areas'
Relevant Fire Danger Index (FDI) - ***100***
Predominate vegetation:-
Classification - ***G***
Type - ***roads, footpaths, buildings, managed grassland, maintained lawns, wind breaks.***
Distance of site from predominate vegetation - ***within 100m***
Effective slope of land - ***flat land***
Determination of Bushfire Attack Level (BAL)- ***29 - There is sufficient risk to warrant specific construction requirements***

SITE CLASSIFICATION
*Site classified as class '**P-M**'*
Refer soil report No.224950 by Simon Anderson Consultants P/L

DESIGN GUST WIND SPEED / WIND CLASSIFICATION
Building tie-downs to be provided in accordance with AS1684-2010 for an assumed design gust wind speed/wind classification of N2(subject to confirmation on site by Relevant Building Surveyor at first inspection) refer to AS1684 for construction requirements.

CLIMATE ZONE
Climate zone for thermal design / thermal performance assessment : Zone ***6***

CORROSION PROTECTION OF BUILT-IN STRUCTURAL MEMBERS
Provide corrosion protection of built-in structural steel members such as steel lintels, shelf angles, connectors, accessories (other than wall ties) in accordance with Table 4.1 of AS4773.1-2015 Masonry in Small Buildings, Part 1: Design suitable for an Environment Classification of ***Marine***

CORROSION PROTECTION FOR SHEET ROOFING
Provide corrosion protection for sheet roofing in accordance with BCA Table 3.5.1.1a suitable for an Environment Classification of ***High***

Municipality	
Surfcoast Shire	*Ph 5261 0600*
Sewerage Authority	
Barwon Water	*Ph 1300 656 007*
Relevant Building Surveyor	
	Ph
Consulting Structural Engineer	
Simon Anderson Consultants	*Ph 0400 597 159*
Geotechnical Engineer	
Simon Anderson Consultants	*Ph 0400 597 159*
Thermal Performance Assessor Name	
Surfcoast Thermal Performance	
Energy Raters	*Ph 0434 420 033*

Revision Schedule

Revision	Issue:	Date
A	Client Concept	20/07/2022
B	Client Brief - Rev B	22/07/2022
C	Client Changes - Rev C	28/7/2022
D	Issue for Planning	4/8/2022
E	Preliminary WDs	25/10/2022
F	Issue for Construction	2/11/2022

© Design Copyright - Meenks Ink Design
This drawing is Copyright and property of the Designer and must not be retained, used or copied for any other project without the Designer's written authority.

Design Matters National

Meenks Ink. Design
Registered Building Practitioner DP-AD 45288
admin@meenksink.com.au 0427 008 190

Issue for Construction

THE CONTRACTOR SHALL VERIFY ALL DIMENSIONS WITH SITE CONDITIONS AND REFER ANY DISCREPANCIES TO THE BUILDER/DESIGNER PRIOR TO COMMENCING WORK.
DO NOT SCALE DRAWING.
WRITTEN DIMENSIONS SHALL TAKE PRECEDENCE OVER SCALED DIMENSIONS. ALL ANOMALIES SHALL BE REFERRED TO THE BUILDER/DESIGNER FOR CLARIFICATION BEFORE PUTTING WORK IN HAND.
ALL CARE HAS BEEN TAKEN TO ENSURE THE ACCURACY OF EXISTING CONDITIONS, EXACT SCOPE OF WORKS MAY VARY AS A RESULT OF UNFORESEEABLE FACTORS WITHIN ENCLOSED SPACES OF STRUCTURE OF BUILDING.

CLIENT: *Rocco & Leah Mezzatesta*
PROJECT: *Internal Alterations and Addition* ***PROJECT No:*** *22-031*
ADDRESS: *9 Summerhills Ave. Lorne*
DWG TITLE: *Cover*
DATE: *November 2022* ***DRAWN BY:*** *DK* ***SCALE @ A3:*** *1 : 100*

SHEET No:
A001

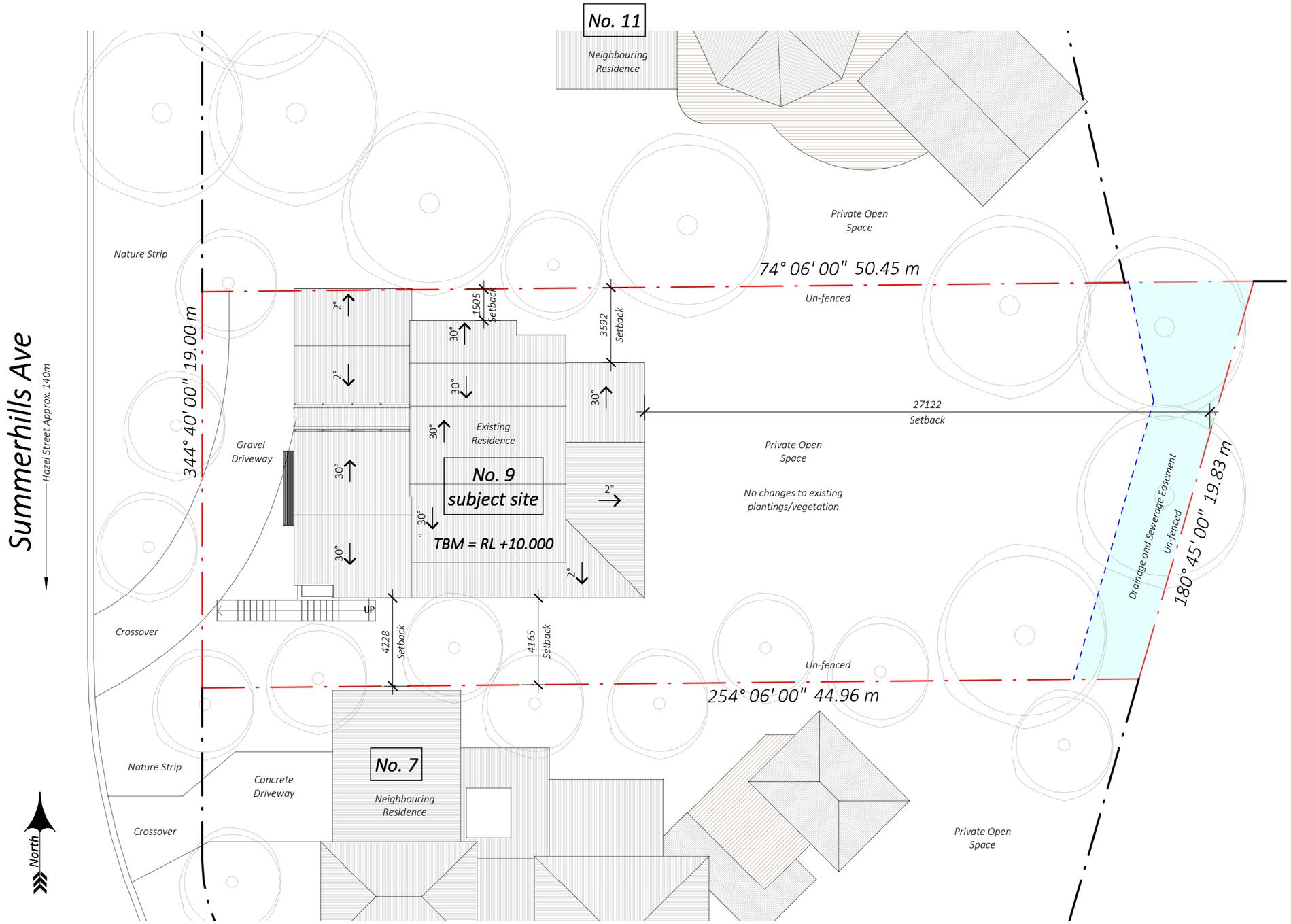

Site Notes:

Levels shown are approximate only & should be checked on site prior to any works commencing. Site levels taken are in relation to existing floor height. Floor height RL = +10.000.

Builder to allow to cut, fill & grade site as required to achieve floor levels as proposed. Floor levels shown are finished floor levels.

All paving & ground levels are to grade away from the building at a 1:100 gradient.

Downpipes & all stormwater collection points are to be connected to the legal point of discharge to the satisfaction of the local authorities.

Area Schedule (Existing)

Name	Area
Ex. B1 Dwelling	86.18 m²
Ex. B1 North/West Deck	47.24 m²
Ex. B1 South Deck	12.52 m²
Ex. Carport	38.38 m²
Ex. GF Dwelling	114.09 m²
Ex. GF North Deck	28.08 m²
Ex. GF South Deck	41.25 m²

Area Schedule (External)

Name	Area
Site Coverage	222.11 m²
Actual Site	906.36 m²
Permeability	683.54 m²
Garden Area	635.95 m²

Area Schedule (New Construction)

Name	Area
New Construction (Addition)	28.94 m²
New Verandah (Roof only)	41.25 m²
Grand total	70.20 m²

Proposed Site Permeability : 683.54m² = 75.42%
Proposed Site Coverage : 222.11m² = 24.5%
Proposed Garden Area : 635.95m² = 70.16%

Proposed Extension : 28.94m² = 14.45% of existing residence.
Proposed Internal Alterations : Unchanged

Site - Proposed

Scale: 1 : 200

Revision Schedule

Revision	Issue:	Date
A	Client Concept	20/07/2022
B	Client Brief - Rev B	22/07/2022
C	Client Changes - Rev C	28/7/2022
D	Issue for Planning	4/8/2022
E	Preliminary WDs	25/10/2022
F	Issue for Construction	2/11/2022

© Design Copyright - Meenks Ink Design
This drawing is Copyright and property of the Designer and must not be retained, used or copied for any other project without the Designer's written authority.

Design Matters National
Meenks Ink. Design
Registered Building Practitioner DP-AD 45288
admin@meenksink.com.au 0427 008 190

Issue for Construction

THE CONTRACTOR SHALL VERIFY ALL DIMENSIONS WITH SITE CONDITIONS AND REFER ANY DISCREPANCIES TO THE BUILDER/DESIGNER PRIOR TO COMMENCING WORK.
DO NOT SCALE DRAWING.
WRITTEN DIMENSIONS SHALL TAKE PRECEDENCE OVER SCALED DIMENSIONS. ALL ANOMALIES SHALL BE REFERRED TO THE BUILDER/DESIGNER FOR CLARIFICATION BEFORE PUTTING WORK IN HAND.
ALL CARE HAS BEEN TAKEN TO ENSURE THE ACCURACY OF EXISTING CONDITIONS, EXACT SCOPE OF WORKS MAY VARY AS A RESULT OF UNFORESEEABLE FACTORS WITHIN ENCLOSED SPACES OF STRUCTURE OF BUILDING.

CLIENT: *Rocco & Leah Mezzatesta*
PROJECT: *Internal Alterations and Addition* ***PROJECT No:*** *22-031*
ADDRESS: *9 Summerhills Ave. Lorne*
DWG TITLE: *Site Plans*
DATE: *November 2022* ***DRAWN BY:*** *DK* ***SCALE @ A3:*** *As indicated*

SHEET No:
A004

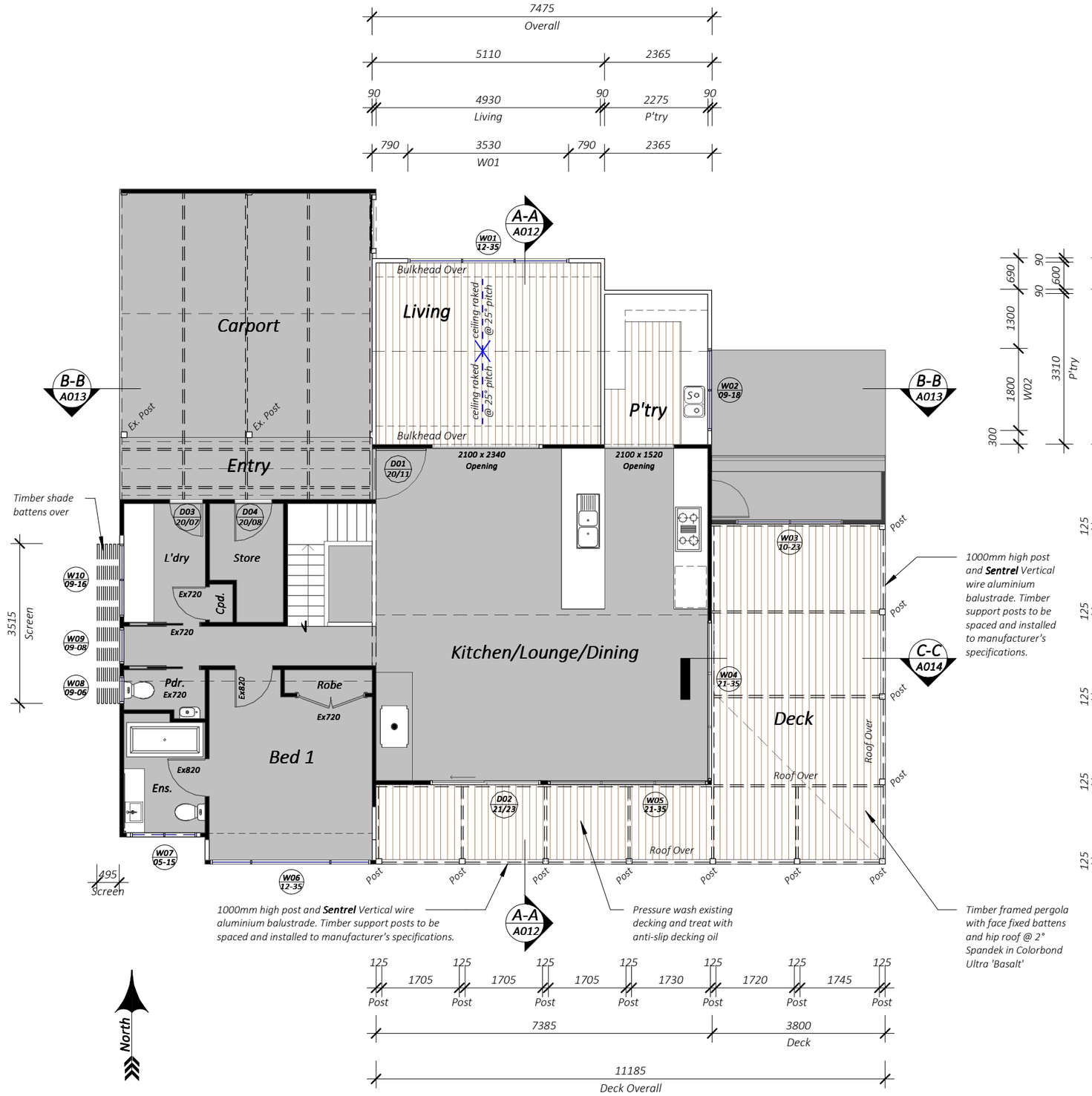

GF Floor Plan - Proposed

Scale: 1 : 100

Floor Finishes

- Existing/Out of Scope
- Carpet
- Concrete
- PC
- Tiles
- Timber

General Notes:

All building work is to comply with the Building Code of Australia. Residential timber framed construction - AS1684 and other relevant standards and by laws.

All glazing to comply with AS1288 - 2006 section 5.11 for low level glazing, sliding doors, windows over baths, glass side lights ie. Safety glass.
Note that glazing to windows in bathrooms is to be safety glass.

Roof trusses to comply with manufacturer's layouts and specifications.

Provide full height articulation joints in brick work in accordance with the cement and concrete association's note TN.61, refer to structural engineers recommendations regarding max spacings and recommended locations.

Provide tiling to minimum of 150mm above kitchen sink, laundry troughs, vanity basins and baths. Provide substrate as specified to all nominated tiled areas .

All windows to have 2100mm head heights from associated floor level unless noted otherwise (refer window schedule & drawings), window sizes scheduled are nominal only- exact sizes to be confirmed by builder prior to construction, colour to be as nominated in colour schedule.

Doors & hardware as scheduled or nominated in building specification.

Angle brick lintels in accordance with the NCC shall be provided to support brickwork over openings in the walling.

Energy Efficiency Notes:

All insulation products/materials must comply with AS/NZS 4859.1

All bulk insulation is to be installed ensuring that the insulation blanket/material is not compressed (except at battens & services)

Insulation must form a 'continuous barrier' over the whole building envelope, including in ceiling, roof, wall & floor locations.

Construction of all habitable rooms are to be enclosed by internal linings that are close fitted at ceiling, wall & floor junctions,
Which includes but not limited to;
- skirtings at wall and floor junctions.
- square set cornices at solid plaster ceiling/wall junctions.

Any chimneys or flues to solid fuel burning appliances are to be provided with a closable damper or flap.

Any exhaust fans, range hoods or evaporative coolers which are to be installed into habitable rooms or conditioned spaces are to have self closing dampers installed.

MINIMUM REQUIREMENTS:
Refer to energy rating documentation for required insulation values and locations.

Reflective sisalation weather wrap with taped horizontal and vertical joints to all external walls. Gaps around windows and doors to be sealed.

Windows: Refer to window schedule for U-Values & Solar Heat Gain Co-efficient (SHGC) Values.

Area Schedule (New Construction)

Name	Area
New Construction (Addition)	28.94 m²
New Verandah (Roof only)	41.25 m²
Grand total	70.20 m²

Legend

AJ	Articulation Joint	OHC	Overhead Cupboards
AFL	Above Floor Level	OV	Oven
AGL	Adjusted Ground Level	NGL	Natural Ground Level
BT	Bath Tub	Nom.	Nominal
CT	Cooktop	REF	Refrigerator
COL	Structural Column	RH	Rangehood
DP	Downpipe	S	Kitchen Sink
DR	Clothes Dryer	SHR	Shower
DW	Dishwasher	TR	Laundry Trough
FFL	Finished Floor Level	UNO	Unless Rated Otherwise
FW	Floor Waste	VB	Vanity Basin
HWS	Hot Water Service	WC	Water Closet
MH	Manhole	WM	Washing Machine

Revision Schedule

Revision	Issue:	Date
A	Client Concept	20/07/2022
B	Client Brief - Rev B	22/07/2022
C	Client Changes - Rev C	28/7/2022
D	Issue for Planning	4/8/2022
E	Preliminary WDs	25/10/2022
F	Issue for Construction	2/11/2022

© Design Copyright - Meenks Ink Design
This drawing is Copyright and property of the Designer and must not be retained, used or copied for any other project without the Designer's written authority.

Design Matters National
Meenks Ink. Design
Registered Building Practitioner DP-AD 45288
admin@meenksink.com.au 0427 008 190

Issue for Construction

THE CONTRACTOR SHALL VERIFY ALL DIMENSIONS WITH SITE CONDITIONS AND REFER ANY DISCREPANCIES TO THE BUILDER/DESIGNER PRIOR TO COMMENCING WORK.
DO NOT SCALE DRAWING.
WRITTEN DIMENSIONS SHALL TAKE PRECEDENCE OVER SCALED DIMENSIONS. ALL ANOMALIES SHALL BE REFERRED TO THE BUILDER/DESIGNER FOR CLARIFICATION BEFORE PUTTING WORK IN HAND.
ALL CARE HAS BEEN TAKEN TO ENSURE THE ACCURACY OF EXISTING CONDITIONS, EXACT SCOPE OF WORKS MAY VARY AS A RESULT OF UNFORESEEABLE FACTORS WITHIN ENCLOSED SPACES OF STRUCTURE OF BUILDING.

CLIENT: Rocco & Leah Mezzatesta
PROJECT: Internal Alterations and Addition **PROJECT No:** 22-031
ADDRESS: 9 Summerhills Ave. Lorne
DWG TITLE: Ground Floor Plan
DATE: November 2022 **DRAWN BY:** DK **SCALE @ A3:** 1 : 100

SHEET No: A005

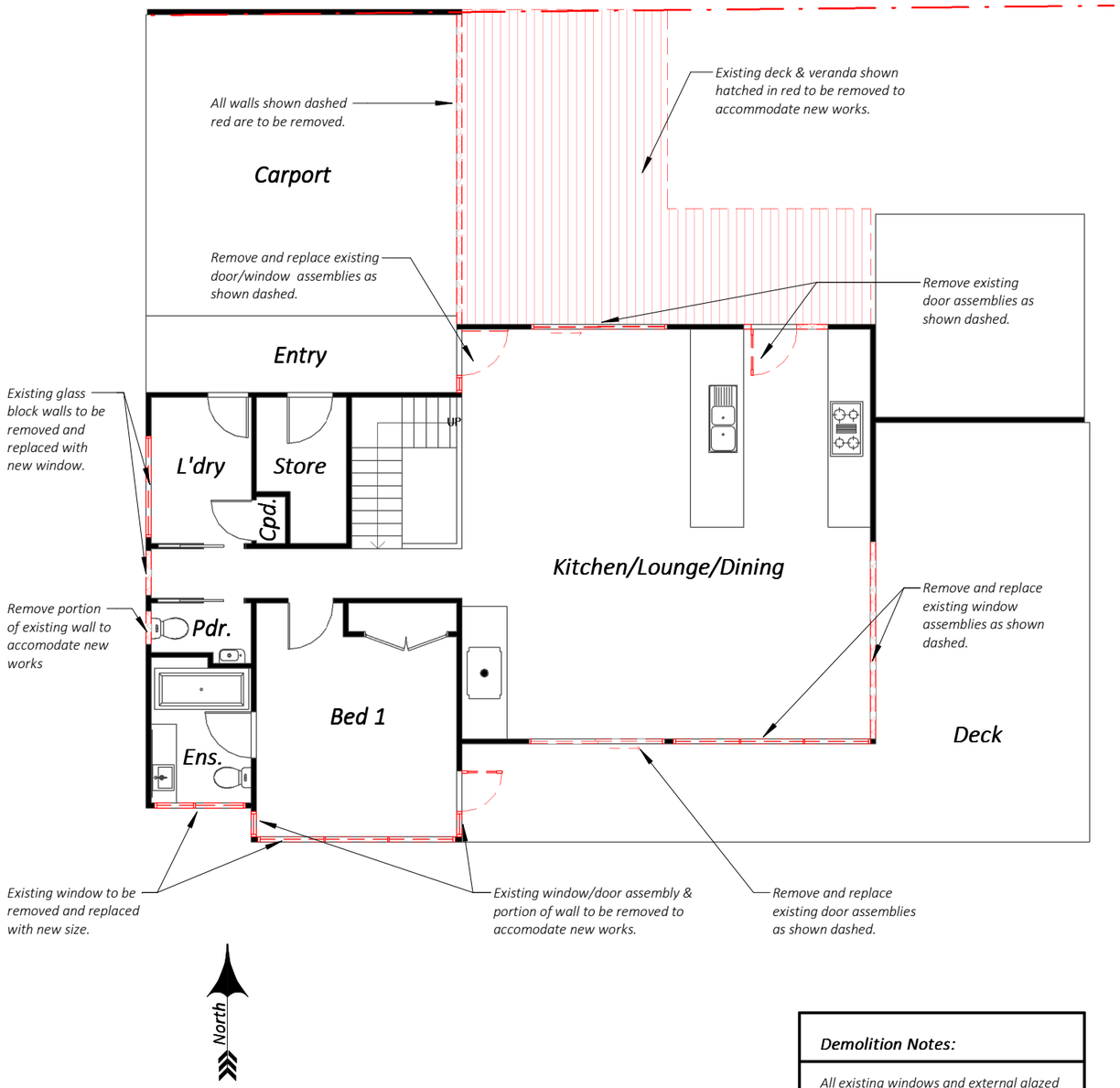

GF Floor Plan - Demolition

Scale: 1 : 100

Demolition Notes:

All existing windows and external glazed doors to be removed and replaced

All existing wall cladding to be removed and replaced

All existing roofing to be removed and replaced including gutters, downpipes and flashings

Demolition Notes

All materials and work practices shall comply with, but not limited to, the Building Regulations 2018, the National Construction Code Series 2019 Building Code of Australia Vol 2 and all relevant current Australian standards (as amended) referred to therein. These specifications specify only the minimum standard of work for the demolition works on residential projects, and all workmanship and precautions shall be to best trade practice.

Precautions must be taken before and during demolition in accordance with AS 2601-2001: The Demolition of Structures.

During the progress of the demolition the works shall be under the continuous supervision of the Demolisher or of an experienced foreman, and demolition shall be executed storey by storey commencing at the roof and working downwards.

The demolition must not be commenced until the precautionary measures have been inspected and approved by the Relevant Building Surveyor.

The Demolisher shall construct a temporary crossing placed over the footpath, as required by the Council.

No part of any external wall on or within 3.00m of a street alignment may be pulled down, except during the hours that the Relevant Building Surveyor directs.

Protective outriggers, fences, awnings, hoarding, barricades and the like must be installed where necessary to guard against danger to life or property or when required by the Relevant Building Surveyor.

Dust creating material, unless thoroughly dampened down, shall not be thrown or dropped from the building but shall be lowered by hoisting apparatus or removed by material chutes. All chutes shall be completely enclosed and a danger sign shall be at the discharge end of every chute.

All practicable precautions shall be taken to avoid danger from collapse of a building when any part of a framed or partly framed building is removed.

Demolished material shall not be allowed to remain on any floor or structure if the weight of the material exceeds the safe carrying capacity of the floor or structure, and such material shall not be so piled or stacked that it will endanger workmen or other persons, and shall be removed as soon as practicable from the site.

No wall, chimney or other structure or part of a structure shall be left unattended or unsupported in such a condition that it may collapse due to wind or vibration or other-wise become dangerous.

Before demolition is commenced, and also during the progress of such works, all electrical cable or apparatus which are liable to be a source of danger - other than cable or apparatus used for the demolition works - shall be disconnected.

Arrangements shall be made with the Relevant Electrical Supply Authority for the disconnection of electrical mains supply except that, where partial demolition is proposed, the licensed Electrical Contractor shall satisfy the Relevant Electrical Supply Authority that the portion of the building to be demolished has been isolated.

The Demolisher shall be responsible for the disconnection of all telecommunication supplies.

The Demolisher shall be responsible to cut and seal any storm water, sewer pipes, water services, gas services and the like.

The position of capped sewer and storm water drains, sealed-off water supply lines, gas supply lines and the like are to be clearly marked on the site.

Any septic tank(s) on the demolition site shall be emptied and filled with clean sand, or removed entirely, and any soak wells, leach drains or similar apparatus shall be removed or filled with clean sand.

Any swimming pools, ponds or the like either on the demolition site or on the neighbouring allotments where affected by the demolition works shall be adequately fenced and made safe, so as to comply with 'AS 1926 Swimming Pool Safety' Parts 1 & 2 prior to commencement of any demolition works.

Materials removed or displaced from the building shall not be placed in any street, road or right of way and, before commencing, where required, shall be kept sprayed with water so as to prevent any nuisance from dust.

Materials removed or displaced from the building being demolished or materials left standing shall not be burned on the demolition site.

Removal of buildings by road must be approved by Relevant Councils Traffic Engineer.

A site management plan is to be implemented during demolition works to control sediment run-off in accordance with EPA Victoria publication #275:
Construction Techniques for Sediment Pollution Control. Provide 'propex' or equivalent silt fences to the low side of the allotment and around all soil stockpiles and storm water inlet pits/sumps and install 'silt stop' filter bags over all storm water entry pits during demolition works. 'Supergro' or equivalent erosion control fabric to be placed over garden beds to prevent surface erosion during revegitation period.

It is the builder's responsibility to carry out an audit prior to the commencement of any works to determine if asbestos is present in the existing works. Where any asbestos product is found in the proposed works area during initial inspection or during the course of the demolition works the builder shall engage an authorised and registered contractor for safe removal and lawful disposal.

A building Permit is required prior to the commencement of these works. The release of these documents is conditional to the Owner obtaining the required Building Permit.

Walls Legend:

= New Walls

= Existing walls to be retained

= Existing walls to be demolished

Revision Schedule

Revision	Issue:	Date
A	Client Concept	20/07/2022
B	Client Brief - Rev B	22/07/2022
C	Client Changes - Rev C	28/7/2022
D	Issue for Planning	4/8/2022
E	Preliminary WDs	25/10/2022
F	Issue for Construction	2/11/2022

© Design Copyright - Meenks Ink Design
This drawing is Copyright and property of the Designer and must not be retained, used or copied for any other project without the Designer's written authority.

Design Matters National
Meenks Ink. Design
Registered Building Practitioner DP-AD 45288
admin@meenksink.com.au 0427 008 190

Issue for Construction

THE CONTRACTOR SHALL VERIFY ALL DIMENSIONS WITH SITE CONDITIONS AND REFER ANY DISCREPANCIES TO THE BUILDER/DESIGNER PRIOR TO COMMENCING WORK.
DO NOT SCALE DRAWING.
WRITTEN DIMENSIONS SHALL TAKE PRECEDENCE OVER SCALED DIMENSIONS. ALL ANOMALIES SHALL BE REFERRED TO THE BUILDER/DESIGNER FOR CLARIFICATION BEFORE PUTTING WORK IN HAND.
ALL CARE HAS BEEN TAKEN TO ENSURE THE ACCURACY OF EXISTING CONDITIONS, EXACT SCOPE OF WORKS MAY VARY AS A RESULT OF UNFORESEEABLE FACTORS WITHIN ENCLOSED SPACES OF STRUCTURE OF BUILDING.

CLIENT: Rocco & Leah Mezzatesta
PROJECT: Internal Alterations and Addition **PROJECT No:** 22-031
ADDRESS: 9 Summerhills Ave. Lorne
DWG TITLE: GF Existing & Demolition
DATE: November 2022 **DRAWN BY:** DK **SCALE @ A3:** 1 : 100

SHEET No: A002

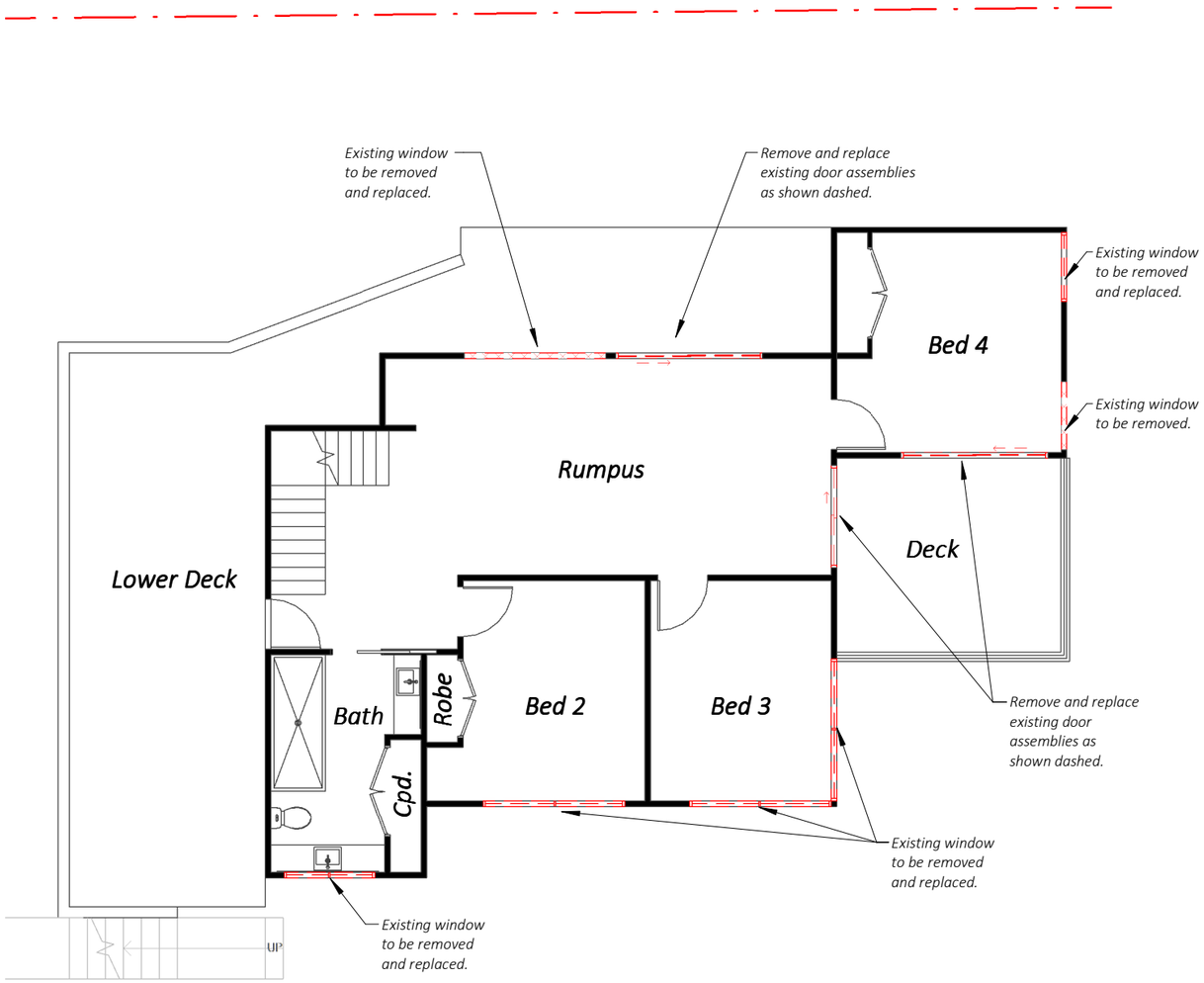

B1 FFL - Demolition

Scale: 1 : 100

Demolition Notes:

All existing windows and external glazed doors to be removed and replaced

All existing wall cladding to be removed and replaced

All existing roofing to be removed and replaced including gutters, downpipes and flashings

Demolition Notes

All materials and work practices shall comply with, but not limited to, the Building Regulations 2018, the National Construction Code Series 2019 Building Code of Australia Vol 2 and all relevant current Australian standards (as amended) referred to therein. These specifications specify only the minimum standard of work for the demolition works on residential projects, and all workmanship and precautions shall be to best trade practice.

Precautions must be taken before and during demolition in accordance with AS 2601-2001: The Demolition of Structures.

During the progress of the demolition the works shall be under the continuous supervision of the Demolisher or of an experienced foreman, and demolition shall be executed storey by storey commencing at the roof and working downwards.

The demolition must not be commenced until the precautionary measures have been inspected and approved by the Relevant Building Surveyor.

The Demolisher shall construct a temporary crossing placed over the footpath, as required by the Council.

No part of any external wall on or within 3.00m of a street alignment may be pulled down, except during the hours that the Relevant Building Surveyor directs.

Protective outriggers, fences, awnings, hoarding, barricades and the like must be installed where necessary to guard against danger to life or property or when required by the Relevant Building Surveyor.

Dust creating material, unless thoroughly dampened down, shall not be thrown or dropped from the building but shall be lowered by hoisting apparatus or removed by material chutes. All chutes shall be completely enclosed and a danger sign shall be at the discharge end of every chute.

All practicable precautions shall be taken to avoid danger from collapse of a building when any part of a framed or partly framed building is removed.

Demolished material shall not be allowed to remain on any floor or structure if the weight of the material exceeds the safe carrying capacity of the floor or structure, and such material shall not be so piled or stacked that it will endanger workmen or other persons, and shall be removed as soon as practicable from the site.

No wall, chimney or other structure or part of a structure shall be left unattended or unsupported in such a condition that it may collapse due to wind or vibration or other-wise become dangerous.

Before demolition is commenced, and also during the progress of such works, all electrical cable or apparatus which are liable to be a source of danger - other than cable or apparatus used for the demolition works - shall be disconnected.

Arrangements shall be made with the Relevant Electrical Supply Authority for the disconnection of electrical mains supply except that, where partial demolition is proposed, the licensed Electrical Contractor shall satisfy the Relevant Electrical Supply Authority that the portion of the building to be demolished has been isolated.

The Demolisher shall be responsible for the disconnection of all telecommunication supplies.

The Demolisher shall be responsible to cut and seal any storm water, sewer pipes, water services, gas services and the like.

The position of capped sewer and storm water drains, sealed-off water supply lines, gas supply lines and the like are to be clearly marked on the site.

Any septic tank(s) on the demolition site shall be emptied and filled with clean sand, or removed entirely, and any soak wells, leach drains or similar apparatus shall be removed or filled with clean sand.

Any swimming pools, ponds or the like either on the demolition site or on the neighbouring allotments where affected by the demolition works shall be adequately fenced and made safe, so as to comply with 'AS 1926 Swimming Pool Safety' Parts 1 & 2 prior to commencement of any demolition works.

Materials removed or displaced from the building shall not be placed in any street, road or right of way and, before commencing, where required, shall be kept sprayed with water so as to prevent any nuisance from dust.

Materials removed or displaced from the building being demolished or materials left standing shall not be burned on the demolition site.

Removal of buildings by road must be approved by Relevant Councils Traffic Engineer.

A site management plan is to be implemented during demolition works to control sediment run-off in accordance with EPA Victoria publication #275:
Construction Techniques for Sediment Pollution Control. Provide 'propex' or equivalent silt fences to the low side of the allotment and around all soil stockpiles and storm water inlet pits/sumps and install 'silt stop' filter bags over all storm water entry pits during demolition works. 'Supergro' or equivalent erosion control fabric to be placed over garden beds to prevent surface erosion during revegitation period.

It is the builder's responsibility to carry out an audit prior to the commencement of any works to determine if asbestos is present in the existing works. Where any asbestos product is found in the proposed works area during initial inspection or during the course of the demolition works the builder shall engage an authorised and registered contractor for safe removal and lawful disposal.

A building Permit is required prior to the commencement of these works. The release of these documents is conditional to the Owner obtaining the required Building Permit.

Walls Legend:

= New Walls

= Existing walls to be retained

= Existing walls to be demolished

Revision Schedule

Revision	Issue:	Date
A	Client Concept	20/07/2022
B	Client Brief - Rev B	22/07/2022
C	Client Changes - Rev C	28/7/2022
D	Issue for Planning	4/8/2022
E	Preliminary WDs	25/10/2022
F	Issue for Construction	2/11/2022

© Design Copyright - Meenks Ink Design
This drawing is Copyright and property of the Designer and must not be retained, used or copied for any other project without the Designer's written authority.

Design Matters National
Meenks Ink. Design
Registered Building Practitioner DP-AD 45288
admin@meenksink.com.au 0427 008 190

Issue for Construction

THE CONTRACTOR SHALL VERIFY ALL DIMENSIONS WITH SITE CONDITIONS AND REFER ANY DISCREPANCIES TO THE BUILDER/DESIGNER PRIOR TO COMMENCING WORK.
DO NOT SCALE DRAWING.
WRITTEN DIMENSIONS SHALL TAKE PRECEDENCE OVER SCALED DIMENSIONS. ALL ANOMALIES SHALL BE REFERRED TO THE BUILDER/DESIGNER FOR CLARIFICATION BEFORE PUTTING WORK IN HAND.
ALL CARE HAS BEEN TAKEN TO ENSURE THE ACCURACY OF EXISTING CONDITIONS, EXACT SCOPE OF WORKS MAY VARY AS A RESULT OF UNFORESEEABLE FACTORS WITHIN ENCLOSED SPACES OF STRUCTURE OF BUILDING.

CLIENT: Rocco & Leah Mezzatesta
PROJECT: Internal Alterations and Addition **PROJECT No:** 22-031
ADDRESS: 9 Summerhills Ave. Lorne
DWG TITLE: B1 Existing & Demolition
DATE: November 2022 **DRAWN BY:** DK **SCALE @ A3:** 1 : 100

SHEET No: A003

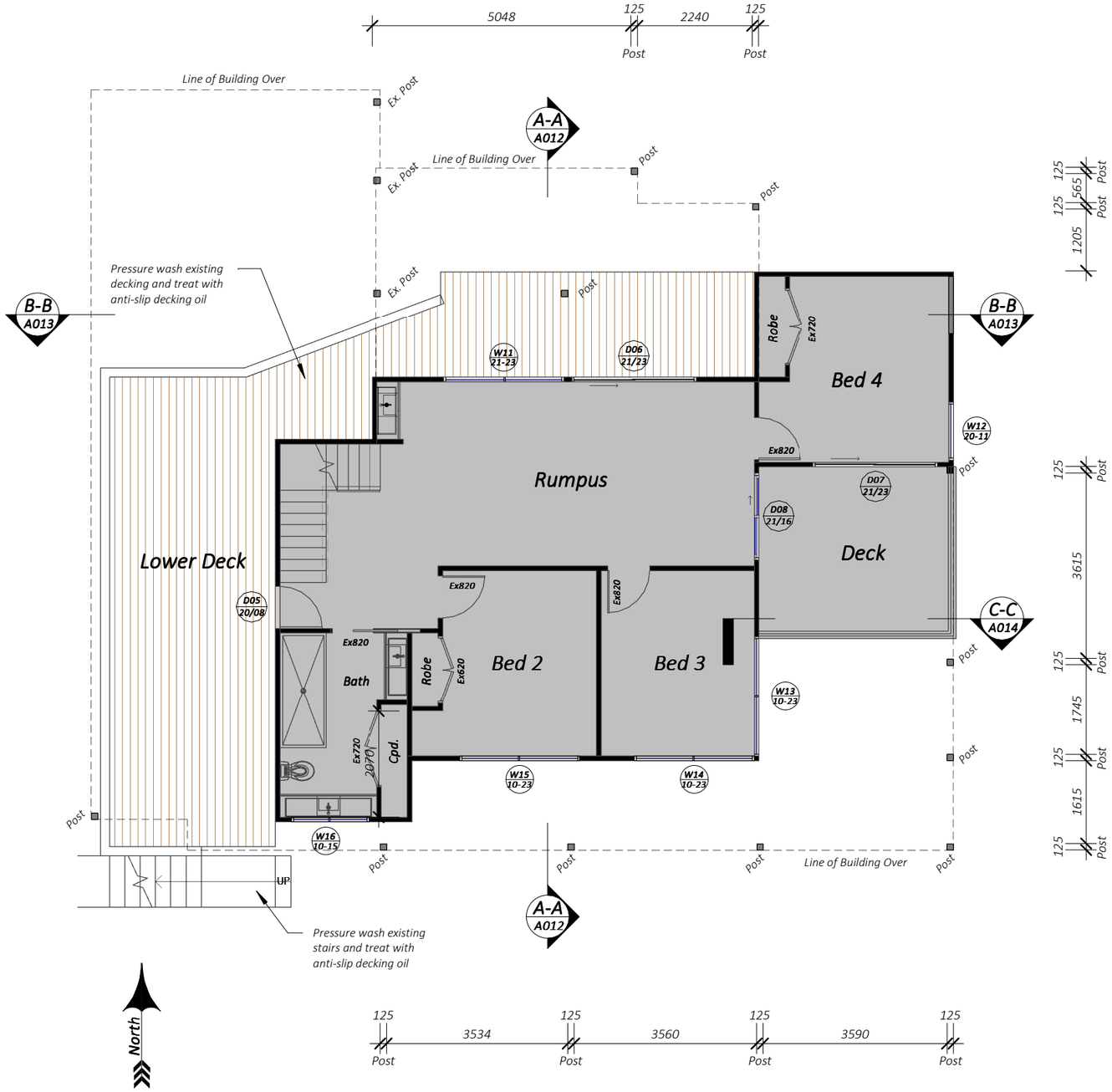

B1 FFL - Proposed

Scale: 1 : 100

General Notes:

All building work is to comply with the Building Code of Australia. Residential timber framed construction - AS1684 and other relevant standards and by laws.

All glazing to comply with AS1288 - 2006 section 5.11 for low level glazing, sliding doors, windows over baths, glass side lights ie. Safety glass.
Note that glazing to windows in bathrooms is to be safety glass.

Roof trusses to comply with manufacturer's layouts and specifications.

Provide full height articulation joints in brick work in accordance with the cement and concrete association's note TN.61, refer to structural engineers recommendations regarding max spacings and recommended locations.

Provide tiling to minimum of 150mm above kitchen sink, laundry troughs, vanity basins and baths. Provide substrate as specified to all nominated tiled areas .

All windows to have 2100mm head heights from associated floor level unless noted otherwise (refer window schedule & drawings), window sizes scheduled are nominal only- exact sizes to be confirmed by builder prior to construction, colour to be as nominated in colour schedule.

Doors & hardware as scheduled or nominated in building specification.

Angle brick lintels in accordance with the NCC shall be provided to support brickwork over openings in the walling.

Energy Efficiency Notes:

All insulation products/materials must comply with AS/NZS 4859.1

All bulk insulation is to be installed ensuring that the insulation blanket/material is not compressed (except at battens & services)

Insulation must form a 'continuous barrier' over the whole building envelope, including in ceiling, roof, wall & floor locations.

Construction of all habitable rooms are to be enclosed by internal linings that are close fitted at ceiling, wall & floor junctions,
Which includes but not limited to;
- skirtings at wall and floor junctions.
- square set cornices at solid plaster ceiling/wall junctions.

Any chimneys or flues to solid fuel burning appliances are to be provided with a closable damper or flap.

Any exhaust fans, range hoods or evaporative coolers which are to be installed into habitable rooms or conditioned spaces are to have self closing dampers installed.

MINIMUM REQUIREMENTS:
Refer to energy rating documentation for required insulation values and locations.

Reflective sisalation weather wrap with taped horizontal and vertical joints to all external walls. Gaps around windows and doors to be sealed.

Windows: Refer to window schedule for U-Values & Solar Heat Gain Co-efficient (SHGC) Values.

Legend

AJ	Articulation Joint	OHC	Overhead Cupboards
AFL	Above Floor Level	OV	Oven
AGL	Adjusted Ground Level	NGL	Natural Ground Level
BT	Bath Tub	Nom.	Nominal
CT	Cooktop	REF	Refrigerator
COL	Structural Column	RH	Rangehood
DP	Downpipe	S	Kitchen Sink
DR	Clothes Dryer	SHR	Shower
DW	Dishwasher	TR	Laundry Trough
FFL	Finished Floor Level	UNO	Unless Rated Otherwise
FW	Floor Waste	VB	Vanity Basin
HWS	Hot Water Service	WC	Water Closet
MH	Manhole	WM	Washing Machine

Revision Schedule

Revision	Issue:	Date
A	Client Concept	20/07/2022
B	Client Brief - Rev B	22/07/2022
C	Client Changes - Rev C	28/7/2022
D	Issue for Planning	4/8/2022
E	Preliminary WDs	25/10/2022
F	Issue for Construction	2/11/2022

© Design Copyright - Meenks Ink Design
This drawing is Copyright and property of the Designer and must not be retained, used or copied for any other project without the Designer's written authority.

Design Matters National
Meenks Ink. Design
Registered Building Practitioner DP-AD 45288
admin@meenksink.com.au 0427 008 190

Issue for Construction

THE CONTRACTOR SHALL VERIFY ALL DIMENSIONS WITH SITE CONDITIONS AND REFER ANY DISCREPANCIES TO THE BUILDER/DESIGNER PRIOR TO COMMENCING WORK.
DO NOT SCALE DRAWING.
WRITTEN DIMENSIONS SHALL TAKE PRECEDENCE OVER SCALED DIMENSIONS. ALL ANOMALIES SHALL BE REFERRED TO THE BUILDER/DESIGNER FOR CLARIFICATION BEFORE PUTTING WORK IN HAND.
ALL CARE HAS BEEN TAKEN TO ENSURE THE ACCURACY OF EXISTING CONDITIONS, EXACT SCOPE OF WORKS MAY VARY AS A RESULT OF UNFORESEEABLE FACTORS WITHIN ENCLOSED SPACES OF STRUCTURE OF BUILDING.

CLIENT: Rocco & Leah Mezzatesta
PROJECT: Internal Alterations and Addition **PROJECT No:** 22-031
ADDRESS: 9 Summerhills Ave. Lorne
DWG TITLE: Lower Floor Plan
DATE: November 2022 **DRAWN BY:** DK **SCALE @ A3:** 1 : 100

SHEET No: A006

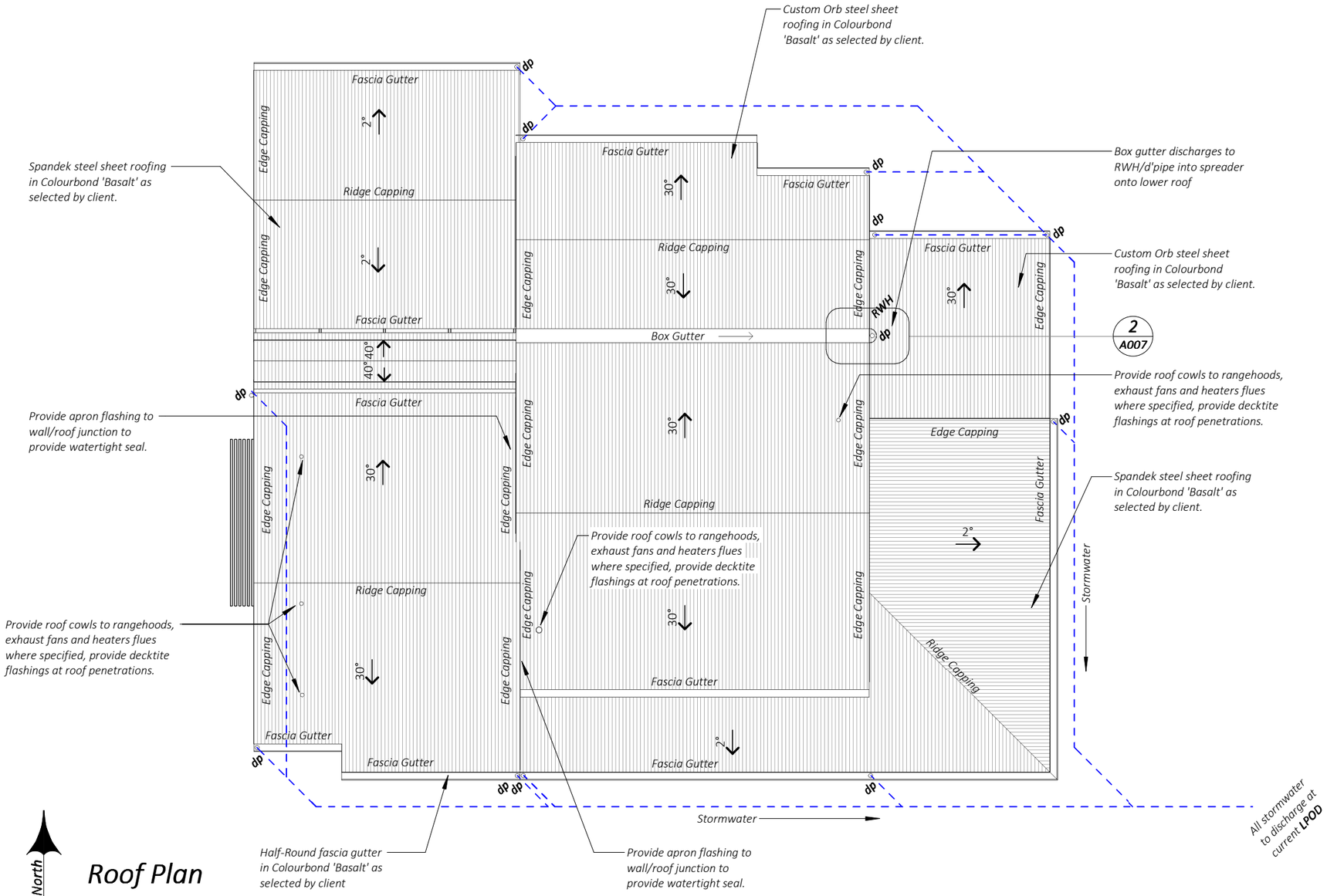

Roof Plan

Scale: 1 : 100

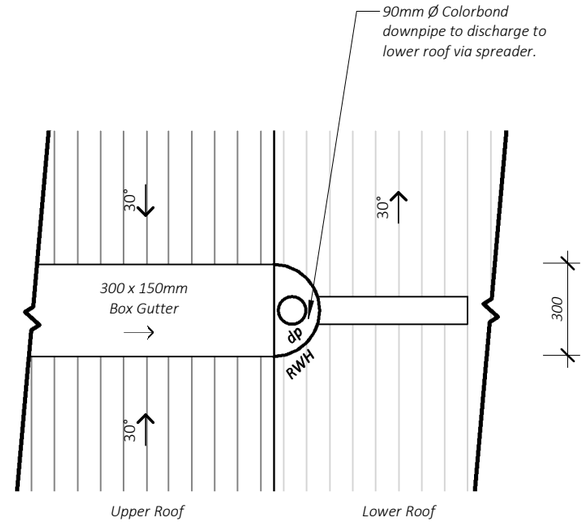

Detail — Roof Plan - Callout 1

Scale 1 : 20 — 2 / A007

Roof Notes:

Prefabricated roof trusses @ pitches & layout as shown to truss manufacturer's details @ 900mm centres with overhangs as shown. Framed roofing in areas as shown on structural engineer's plans.

New roofing to be sheet metal fixed to roofing battens @ 900mm max centres.
Profile varies based on roof pitch, sheeting types to be as follows;
Roof pitch 2° - sheeting to be "Colorbond Spandek" roofing or similar approved.
Roof pitch > 5° - sheeting to be "Colorbond Custom Orb".
Provide insulated foil sarking to underside of roof sheet material (Refer energy rating for required R-Value).

Provide all relative ridge/edge cappings & flashings to match, colour as selected by owners.

All fascia gutters to be "Lysaght - Half-Round" gutters fixed with proprietary gutter brackets. Colorbond colour to be as selected by builder & owner.
Fascia type to be "Lysaght - Novaline" metal fascia with associated corners, brackets and installation accessories. Colorbond colour to be selected by builder & owner.

Downpipes in locations as noted on plans. Downpipes to be connected to on site legal point of discharge, all connections to stormwater system to be in accordance with the local authorities guidelines.

Provide roof cowls to rangehoods, exhaust fans and heaters flues where specified, provide decktite flashings at roof penetrations.

APPENDIX H

BUSHFIRE-RESISTING SPECIES

(Informative)

A2 The following species have been tested and have met the requirements of Paragraph F2, Appendix F:

Standard trade name	Botanical name
Ash, silvertop	Eucalyptus sieberi
Blackbutt	Eucalyptus pilularis
Gum, red, river	Eucalyptus camaldulensis
Gum, spotted	Corymbia maculata
	Corymbia henryi
	Corymbia citriodora
Ironbark, red	Eucalyptus sideroxylon
Kwila (Merbau)	Intsia bijuga
Turpentine	Syncarpia glomulifera

Design Matters National

Meenks Ink. Design — Registered Building Practitioner DP-AD 45288

admin@meenksink.com.au 0427 008 190

CLIENT:	Rocco & Leah Mezzatesta	**DRAWN BY:**	DK
PROJECT:	Internal Alterations and Addition	**PROJECT No:**	22-031
ADDRESS:	9 Summerhills Ave. Lorne		
DWG TITLE:	Roof Plan		
DATE:	November 2022	**SCALE @ A3:**	As indicated

Issue for Construction

THE CONTRACTOR SHALL VERIFY ALL DIMENSIONS WITH SITE CONDITIONS AND REFER ANY DISCREPANCIES TO THE BUILDER/DESIGNER PRIOR TO COMMENCING WORK.
DO NOT SCALE DRAWING.
WRITTEN DIMENSIONS SHALL TAKE PRECEDENCE OVER SCALED DIMENSIONS. ALL ANOMALIES SHALL BE REFERRED TO THE BUILDER/DESIGNER FOR CLARIFICATION BEFORE PUTTING WORK IN HAND.
ALL CARE HAS BEEN TAKEN TO ENSURE THE ACCURACY OF EXISTING CONDITIONS, EXACT SCOPE OF WORKS MAY VARY AS A RESULT OF UNFORESEEABLE FACTORS WITHIN ENCLOSED SPACES OF STRUCTURE OF BUILDING.

Revision Schedule

Revision	Issue:	Date
A	Client Concept	20/07/2022
B	Client Brief - Rev B	22/07/2022
C	Client Changes - Rev C	28/7/2022
D	Issue for Planning	4/8/2022
E	Preliminary WDs	25/10/2022
F	Issue for Construction	2/11/2022

© Design Copyright - Paul Meenks
This drawing is Copyright and property of the Designer and must not be retained, used or copied for any other project without the Designer's written authority.

SHEET No: A007

Electrical Plan

Scale: 1 : 100

Electrical Abbreviations:

AB =	*Above Bench*
BM =	*Bench Mount (Side)*
CT =	*Cooktop*
DW =	*Dishwasher*
EXT =	*External Grade Outlet*
NTD=	*Network Termination Device*
OV =	*Oven - Hard Wired*
PCD=	*Premises Connection Device*
PH =	*Telephone Outlet*
RD =	*Roller Door Power Outlet (Ceiling Mounted)*
REF =	*Refridgerator Outlet*
RH =	*Rangehood*
TV =	*Television Outlet*
UB=	*Under Bench*

Ceiling Notes:

Ceiling lining to be 10mm plasterboard throughout unless otherwise noted, 6mm villaboard or 10mm water resistant plasterboard to wet areas.

Cornices are to be 50mm coved cornices.

Ceiling heights indicated are taken from associated floor level in that area.

Eaves lining to be James Hardie "Hardieflex" eaves lining with butt V-joints.

FPB	*= Flush stopped 10mm plasterboard ceiling lining.*
FVB	*= Flush stopped 6mm Villaboard lining.*
FPBH	*= Flush stopped plasterboard bulkhead - height as indicated.*
HFEL	*= James Hardie - Hardieflex 4.5mm eaves lining with butt V-joints and paint finish.*

FPB / 2700 *Ceiling type & height indicator*

Area Schedule (New Construction)	
Name	*Area*
New Construction (Addition)	*28.94 m²*
New Verandah (Roof only)	*41.25 m²*
Grand total	*70.20 m²*

Electrical & Lighting Legend:

- *MB* — *Meterboard*
- *SB* — *Switchboard - PDL- DBF30 Flush Mount switchboard or similar approved.*
- *S* — *Smoke Detectors - Interconnected & hard wired to switchboard with dedicated circuit & 9V battery backup.*
- *IXL Classic Triumph (3 in 1) - 2 x 275W Heat lamp, fan & light fitting. Light globe - 12W LED.*
- *Recessed LED light fitting - Typical 12W*
- *LED Ground UpLight - Typical 12W .*
- *Exhaust fan - builder selected. Ducted to exterior with self-closing damper. To be wired to light switch in powder rooms & ensuites with no external windows.* ***Ducted to exterior with self closing damper.***
- *Batten holder fitting - Typical 15W.*
- *1200mm LED batten light fitting - Typical 36W.*
- *External weather proof wall mounted light fittings - client selected. Typical 12W.*
- *Internal wall mounted light fittings - client selected - mounting height to be confirmed with owners.*
- *Floodlight, 2100mm AFL*
- ***PH*** — *Telephone point - Telstra.*
- *TV* — *Television point - Aerial.*
- *Light switch - single*
- *Electrical wiring*
- *GPO - single*
- *GPO - double*
- *GPO - USB*
- *Single data point*
- *Overhead heating duct*
- *HWS* — *Owner/builder selected solar hot water system.*
- *Ceiling fan - builder selected.*

Electrical Notes:

HEIGHTS OF GPO'S AS FOLLOWS:
Generally - 200mm Above floor level
Above Bench - 200mm Above top of bench level
External - 300mm Above ground level

GPOs to be Clipsal Classic C2000 type unless otherwise advised.

All light switches to be 1100mm above floor level

Light switches to be Clipsal Classic C2000 type unless otherwise advised.

Final location for all electrical and lighting fixtures to be confirmed on site with builder, owner and electrician prior to cutting holes in walls and ceilings. Layout to be marked out on floor by electrician fro review and approval.

All external lighting is to be connected to motion sensor and timer in accordance with NCC 2019 Volume 2, Part 3.12.5.5.

Electrical contractor is to provide power to an electrical isolator switch for main A/C-Heating unit. Location of isolator switch to be confirmed on site based on unit selected.

Revision Schedule

Revision	Issue:	Date
A	Client Concept	20/07/2022
B	Client Brief - Rev B	22/07/2022
C	Client Changes - Rev C	28/7/2022
D	Issue for Planning	4/8/2022
E	Preliminary WDs	25/10/2022
F	Issue for Construction	2/11/2022

© Design Copyright - Meenks Ink Design
This drawing is Copyright and property of the Designer and must not be retained, used or copied for any other project without the Designer's written authority.

Design Matters National
Meenks Ink. Design
Registered Building Practitioner DP-AD 45288
admin@meenksink.com.au 0427 008 190

Issue for Construction

THE CONTRACTOR SHALL VERIFY ALL DIMENSIONS WITH SITE CONDITIONS AND REFER ANY DISCREPANCIES TO THE BUILDER/DESIGNER PRIOR TO COMMENCING WORK.
DO NOT SCALE DRAWING.
WRITTEN DIMENSIONS SHALL TAKE PRECEDENCE OVER SCALED DIMENSIONS. ALL ANOMALIES SHALL BE REFERRED TO THE BUILDER/DESIGNER FOR CLARIFICATION BEFORE PUTTING WORK IN HAND.
ALL CARE HAS BEEN TAKEN TO ENSURE THE ACCURACY OF EXISTING CONDITIONS, EXACT SCOPE OF WORKS MAY VARY AS A RESULT OF UNFORESEEABLE FACTORS WITHIN ENCLOSED SPACES OF STRUCTURE OF BUILDING.

CLIENT: *Rocco & Leah Mezzatesta*
PROJECT: *Internal Alterations and Addition* ***PROJECT No:*** *22-031*
ADDRESS: *9 Summerhills Ave. Lorne*
DWG TITLE: *Electrical Plans*
DATE: *November 2022* ***DRAWN BY:*** *DK* ***SCALE @ A3:*** *1 : 100*

SHEET No:
A008

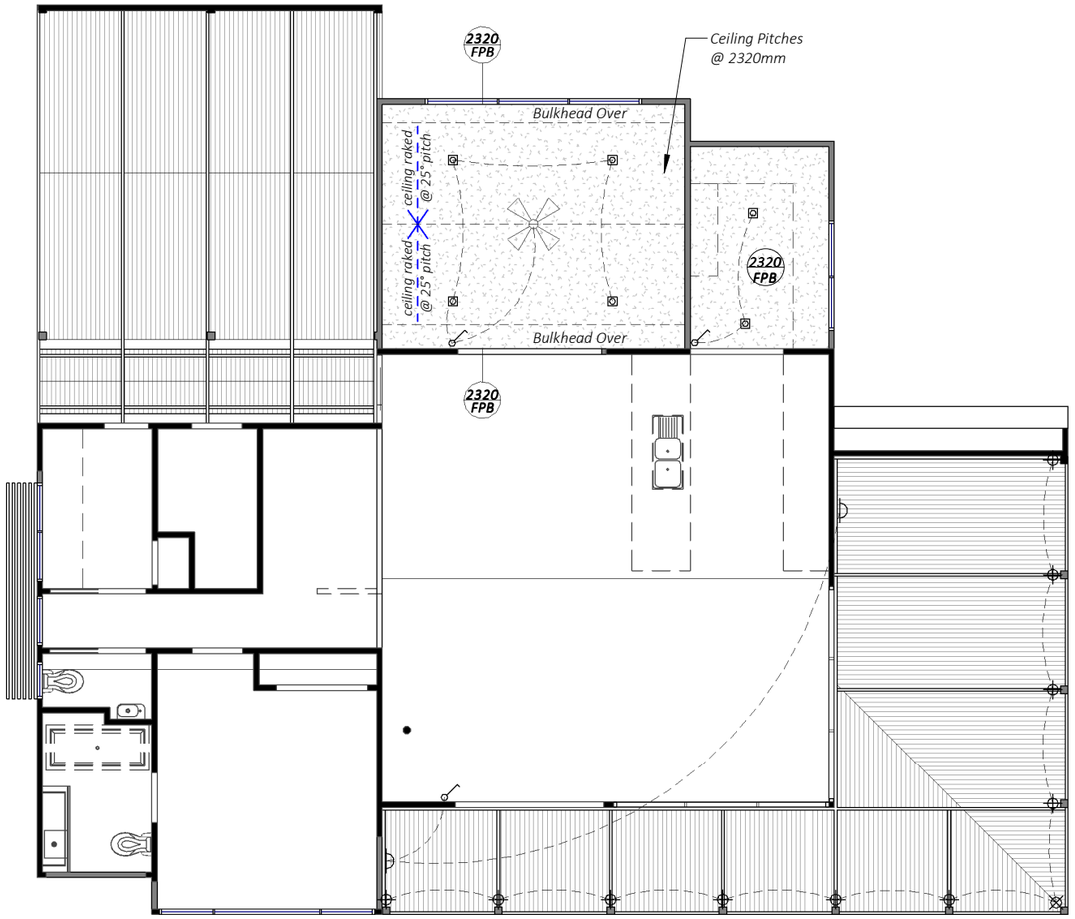

North

Reflected Ceiling Plan

Scale: 1 : 100

Electrical Abbreviations:

AB =	Above Bench
BM =	Bench Mount (Side)
CT =	Cooktop
DW =	Dishwasher
EXT =	External Grade Outlet
NTD=	Network Termination Device
OV =	Oven - Hard Wired
PCD=	Premises Connection Device
PH =	Telephone Outlet
RD =	Roller Door Power Outlet (Ceiling Mounted)
REF =	Refridgerator Outlet
RH =	Rangehood
TV =	Television Outlet
UB=	Under Bench

Ceiling Notes:

Ceiling lining to be 10mm plasterboard throughout unless otherwise noted, 6mm villaboard or 10mm water resistant plasterboard to wet areas.

Cornices are to be 50mm coved cornices.

Ceiling heights indicated are taken from associated floor level in that area.

Eaves lining to be James Hardie "Hardieflex" eaves lining with butt V-joints.

FPB	= Flush stopped 10mm plasterboard ceiling lining.
FVB	= Flush stopped 6mm Villaboard lining.
FPBH	= Flush stopped plasterboard bulkhead - height as indicated.
HFEL	= James Hardie - Hardieflex 4.5mm eaves lining with butt V-joints and paint finish.

FPB / 2700 — Ceiling type & height indicator

Electrical & Lighting Legend:

- MB — Meterboard
- SB — Switchboard - PDL- DBF30 Flush Mount switchboard or similar approved.
- S — Smoke Detectors - Interconnected & hard wired to switchboard with dedicated circuit & 9V battery backup.
- IXL Classic Triumph (3 in 1) - 2 x 275W Heat lamp, fan & light fitting. Light globe - 12W LED.
- Recessed LED light fitting - Typical 12W
- LED Ground UpLight - Typical 12W .
- Exhaust fan - builder selected. Ducted to exterior with self-closing damper. To be wired to light switch in powder rooms & ensuites with no external windows. **Ducted to exterior with self closing damper.**
- Batten holder fitting - Typical 15W.
- 1200mm LED batten light fitting - Typical 36W.
- External weather proof wall mounted light fittings - client selected. Typical 12W.
- Internal wall mounted light fittings - client selected - mounting height to be confirmed with owners.
- Floodlight, 2100mm AFL
- PH — Telephone point - Telstra.
- TV — Television point - Aerial.
- Light switch - single
- Electrical wiring
- GPO - single
- GPO - double
- GPO - USB
- Single data point
- Overhead heating duct
- HWS — Owner/builder selected solar hot water system.
- Ceiling fan - builder selected.

Area Schedule (New Construction)	
Name	Area
New Construction (Addition)	28.94 m²
New Verandah (Roof only)	41.25 m²
Grand total	70.20 m²

Lighting Load Calculations
NCC 2019 Volume 2, Part 3.12.5.5 Artificial Lighting.

INTERNAL LIGHTING

Floor Area	=28.94m²
Lighting Load Allowance	= 5W/m²
Total Lighting Load Allowed	= 144.7W
Proposed Lighting:	
Recessed LED Fittings	
Led Light Fittings x 6 @ 12W	= 72W
Total Lighting Proposed	**= 72W**
Lighting Load W/m²	**= 2.48W/m²**

EXTERNAL LIGHTING

Floor Area	=41.25m²
Lighting Load Allowance	= 4W/m²
Total Lighting Load Allowed	= 165W
Proposed Lighting:	
Recessed LED & wall mounted LED fittings	
Led Light Fittings x 11 @ 12W	= 132W
Led Light Fittings x 2 @ 12W	= 24W
Total Lighting Proposed	**= 156W**
Lighting Load W/m²	**= 3.78W/m²**

Electrical Notes:

HEIGHTS OF GPO'S AS FOLLOWS:
Generally - 200mm Above floor level
Above Bench - 200mm Above top of bench level
External - 300mm Above ground level

GPOs to be Clipsal Classic C2000 type unless otherwise advised.

All light switches to be 1100mm above floor level

Light switches to be Clipsal Classic C2000 type unless otherwise advised.

Final location for all electrical and lighting fixtures to be confirmed on site with builder, owner and electrician prior to cutting holes in walls and ceilings. Layout to be marked out on floor by electrician fro review and approval.

All external lighting is to be connected to motion sensor and timer in accordance with NCC 2019 Volume 2, Part 3.12.5.5.

Electrical contractor is to provide power to an electrical isolator switch for main A/C-Heating unit. Location of isolator switch to be confirmed on site based on unit selected.

Revision Schedule

Revision	Issue:	Date
A	Client Concept	20/07/2022
B	Client Brief - Rev B	22/07/2022
C	Client Changes - Rev C	28/7/2022
D	Issue for Planning	4/8/2022
E	Preliminary WDs	25/10/2022
F	Issue for Construction	2/11/2022

© Design Copyright - Meenks Ink Design
This drawing is Copyright and property of the Designer and must not be retained, used or copied for any other project without the Designer's written authority.

Design Matters National
Meenks Ink. Design
Registered Building Practitioner DP-AD 45288
admin@meenksink.com.au 0427 008 190

Issue for Construction

THE CONTRACTOR SHALL VERIFY ALL DIMENSIONS WITH SITE CONDITIONS AND REFER ANY DISCREPANCIES TO THE BUILDER/DESIGNER PRIOR TO COMMENCING WORK.
DO NOT SCALE DRAWING.
WRITTEN DIMENSIONS SHALL TAKE PRECEDENCE OVER SCALED DIMENSIONS. ALL ANOMALIES SHALL BE REFERRED TO THE BUILDER/DESIGNER FOR CLARIFICATION BEFORE PUTTING WORK IN HAND.
ALL CARE HAS BEEN TAKEN TO ENSURE THE ACCURACY OF EXISTING CONDITIONS, EXACT SCOPE OF WORKS MAY VARY AS A RESULT OF UNFORESEEABLE FACTORS WITHIN ENCLOSED SPACES OF STRUCTURE OF BUILDING.

CLIENT: Rocco & Leah Mezzatesta
PROJECT: Internal Alterations and Addition **PROJECT No:** 22-031
ADDRESS: 9 Summerhills Ave. Lorne
DWG TITLE: Reflected Ceiling Plan
DATE: November 2022 **DRAWN BY:** DK **SCALE @ A3:** 1 : 100

SHEET No: A009

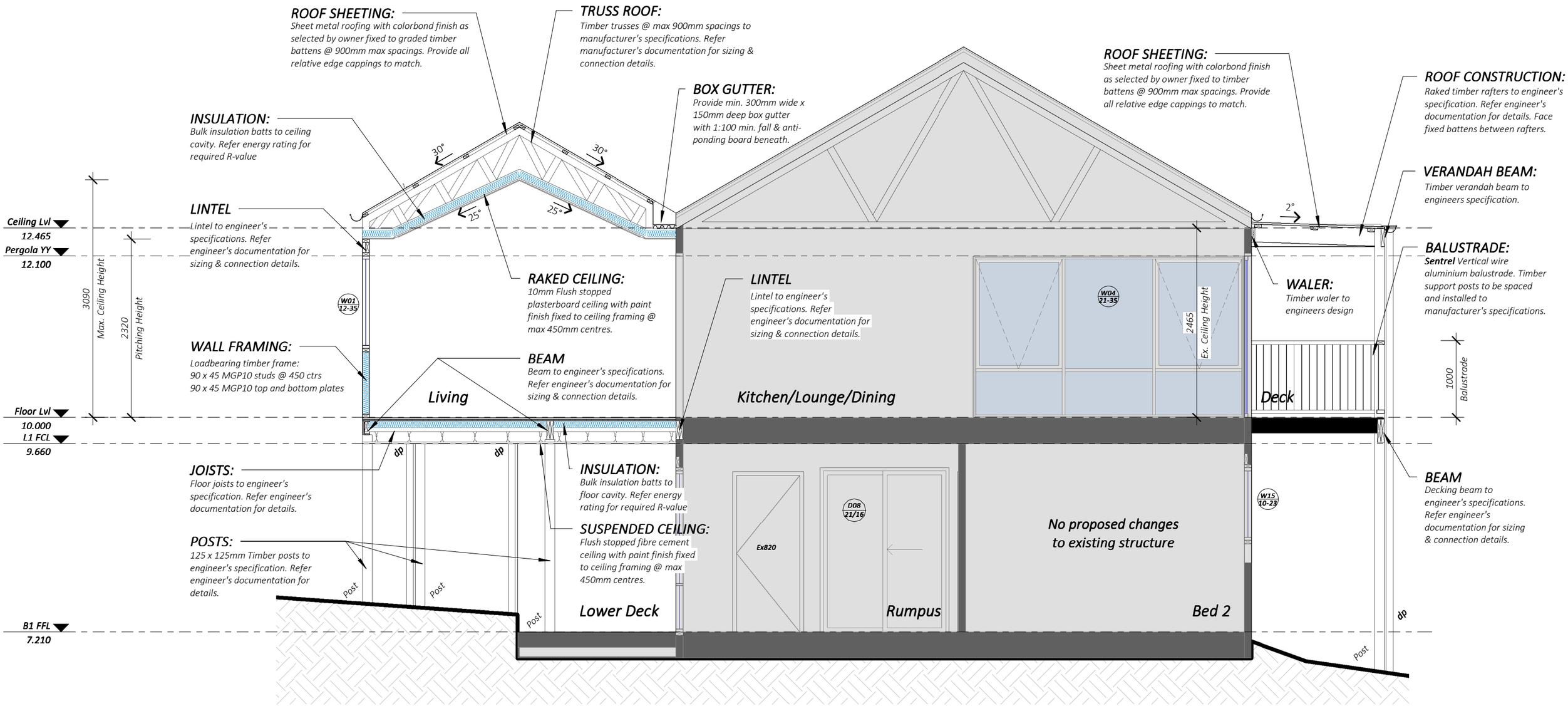

Note:
A vapour permeable membrane to the external side of the primary insulation layer of wall assemblies that form the external envelope of the building (including the internal Garage wall. The membrane is to comply with AS4200.1 & be installed in accordance with AS4200.2.

Section A-A A005

Scale: 1 : 50

Revision Schedule		
Revision	Issue:	Date
A	Client Concept	20/07/2022
B	Client Brief - Rev B	22/07/2022
C	Client Changes - Rev C	28/7/2022
D	Issue for Planning	4/8/2022
E	Preliminary WDs	25/10/2022
F	Issue for Construction	2/11/2022

© Design Copyright - Meenks Ink Design
This drawing is Copyright and property of the Designer and must not be retained, used or copied for any other project without the Designer's written authority.

Design Matters National
Meenks Ink. Design
Registered Building Practitioner DP-AD 45288
admin@meenksink.com.au 0427 008 190

Issue for Construction

THE CONTRACTOR SHALL VERIFY ALL DIMENSIONS WITH SITE CONDITIONS AND REFER ANY DISCREPANCIES TO THE BUILDER/DESIGNER PRIOR TO COMMENCING WORK.
DO NOT SCALE DRAWING.
WRITTEN DIMENSIONS SHALL TAKE PRECEDENCE OVER SCALED DIMENSIONS. ALL ANOMALIES SHALL BE REFERRED TO THE BUILDER/DESIGNER FOR CLARIFICATION BEFORE PUTTING WORK IN HAND.
ALL CARE HAS BEEN TAKEN TO ENSURE THE ACCURACY OF EXISTING CONDITIONS, EXACT SCOPE OF WORKS MAY VARY AS A RESULT OF UNFORESEEABLE FACTORS WITHIN ENCLOSED SPACES OF STRUCTURE OF BUILDING.

CLIENT: Rocco & Leah Mezzatesta
PROJECT: Internal Alterations and Addition **PROJECT No:** 22-031
ADDRESS: 9 Summerhills Ave. Lorne
DWG TITLE: Section A
DATE: November 2022 **DRAWN BY:** DK **SCALE @ A3:** 1 : 50

SHEET No: A012

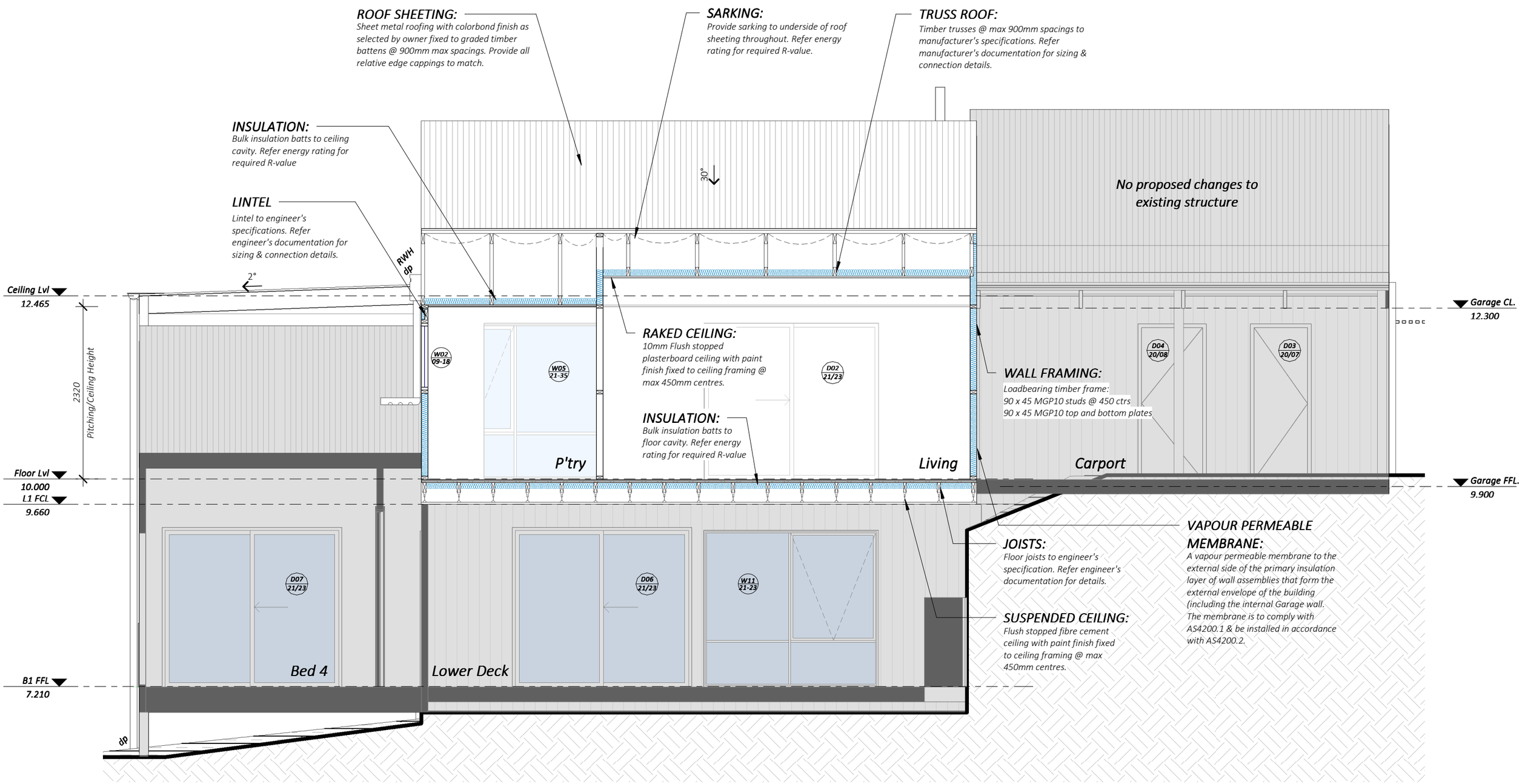

Section B-B A005

Scale: 1 : 50

Revision Schedule		
Revision	Issue:	Date
A	Client Concept	20/07/2022
B	Client Brief - Rev B	22/07/2022
C	Client Changes - Rev C	28/7/2022
D	Issue for Planning	4/8/2022
E	Preliminary WDs	25/10/2022
F	Issue for Construction	2/11/2022

© Design Copyright - Meenks Ink Design
This drawing is Copyright and property of the Designer and must not be retained, used or copied for any other project without the Designer's written authority.

Design Matters National
Meenks Ink. Design
Registered Building Practitioner DP-AD 45288
admin@meenksink.com.au 0427 008 190

Issue for Construction

THE CONTRACTOR SHALL VERIFY ALL DIMENSIONS WITH SITE CONDITIONS AND REFER ANY DISCREPANCIES TO THE BUILDER/DESIGNER PRIOR TO COMMENCING WORK.
DO NOT SCALE DRAWING.
WRITTEN DIMENSIONS SHALL TAKE PRECEDENCE OVER SCALED DIMENSIONS. ALL ANOMALIES SHALL BE REFERRED TO THE BUILDER/DESIGNER FOR CLARIFICATION BEFORE PUTTING WORK IN HAND.
ALL CARE HAS BEEN TAKEN TO ENSURE THE ACCURACY OF EXISTING CONDITIONS, EXACT SCOPE OF WORKS MAY VARY AS A RESULT OF UNFORESEEABLE FACTORS WITHIN ENCLOSED SPACES OF STRUCTURE OF BUILDING.

CLIENT: Rocco & Leah Mezzatesta
PROJECT: Internal Alterations and Addition **PROJECT No:** 22-031
ADDRESS: 9 Summerhills Ave. Lorne
DWG TITLE: Section B
DATE: November 2022 **DRAWN BY:** DK **SCALE @ A3:** 1 : 50

SHEET No: A013

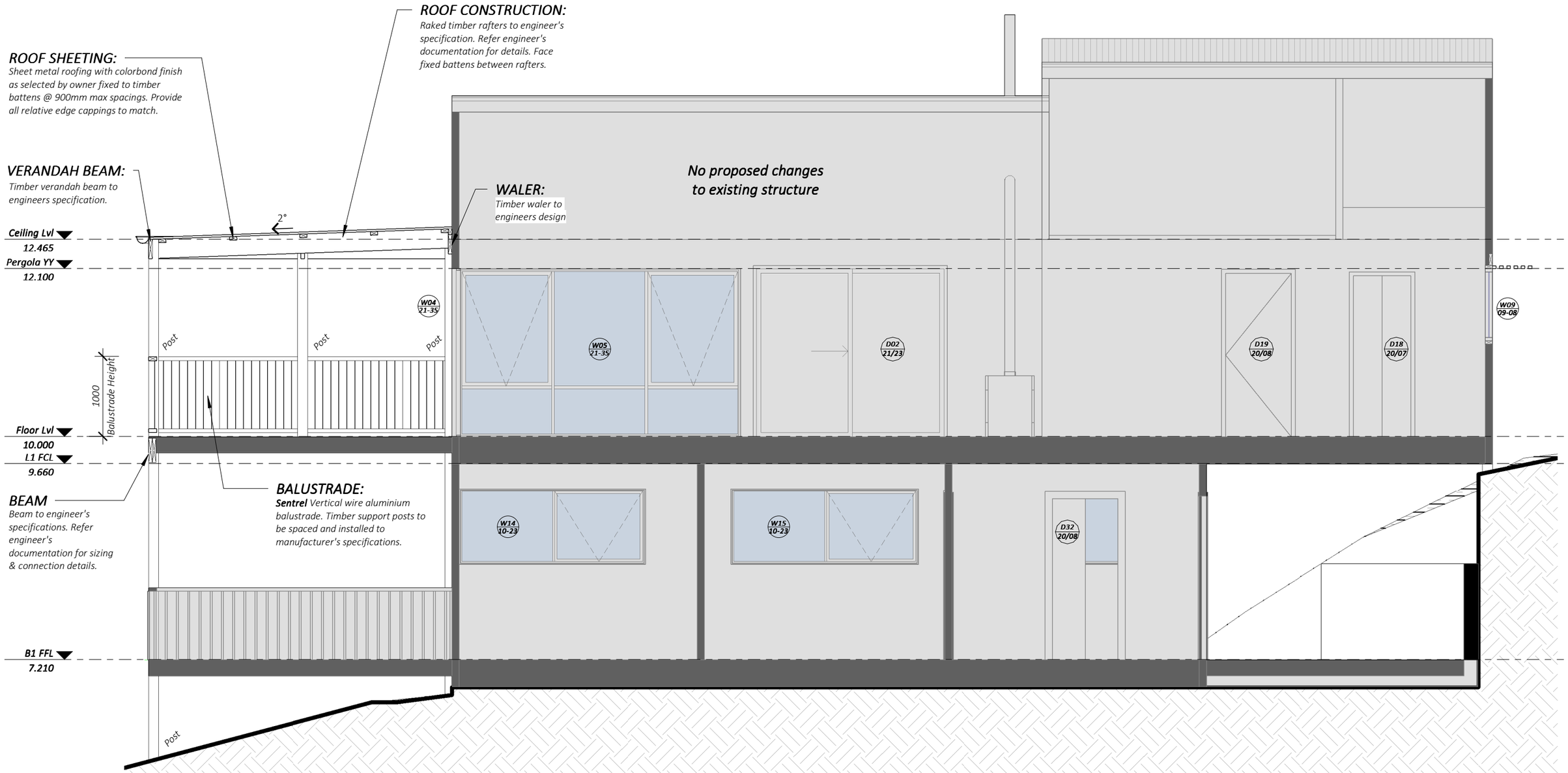

Section C-C

Scale: 1 : 50

A005

Revision Schedule		
Revision	Issue:	Date
A	Client Concept	20/07/2022
B	Client Brief - Rev B	22/07/2022
C	Client Changes - Rev C	28/7/2022
D	Issue for Planning	4/8/2022
E	Preliminary WDs	25/10/2022
F	Issue for Construction	2/11/2022

© Design Copyright - Meenks Ink Design
This drawing is Copyright and property of the Designer and must not be retained, used or copied for any other project without the Designer's written authority.

Design Matters National
Meenks Ink. Design
Registered Building Practitioner DP-AD 45288
admin@meenksink.com.au 0427 008 190

Issue for Construction

THE CONTRACTOR SHALL VERIFY ALL DIMENSIONS WITH SITE CONDITIONS AND REFER ANY DISCREPANCIES TO THE BUILDER/DESIGNER PRIOR TO COMMENCING WORK.
DO NOT SCALE DRAWING.
WRITTEN DIMENSIONS SHALL TAKE PRECEDENCE OVER SCALED DIMENSIONS. ALL ANOMALIES SHALL BE REFERRED TO THE BUILDER/DESIGNER FOR CLARIFICATION BEFORE PUTTING WORK IN HAND.
ALL CARE HAS BEEN TAKEN TO ENSURE THE ACCURACY OF EXISTING CONDITIONS, EXACT SCOPE OF WORKS MAY VARY AS A RESULT OF UNFORESEEABLE FACTORS WITHIN ENCLOSED SPACES OF STRUCTURE OF BUILDING.

CLIENT: Rocco & Leah Mezzatesta
PROJECT: Internal Alterations and Addition **PROJECT No:** 22-031
ADDRESS: 9 Summerhills Ave. Lorne
DWG TITLE: Section C
DATE: November 2022 **DRAWN BY:** DK **SCALE @ A3:** 1 : 50

SHEET No: A014

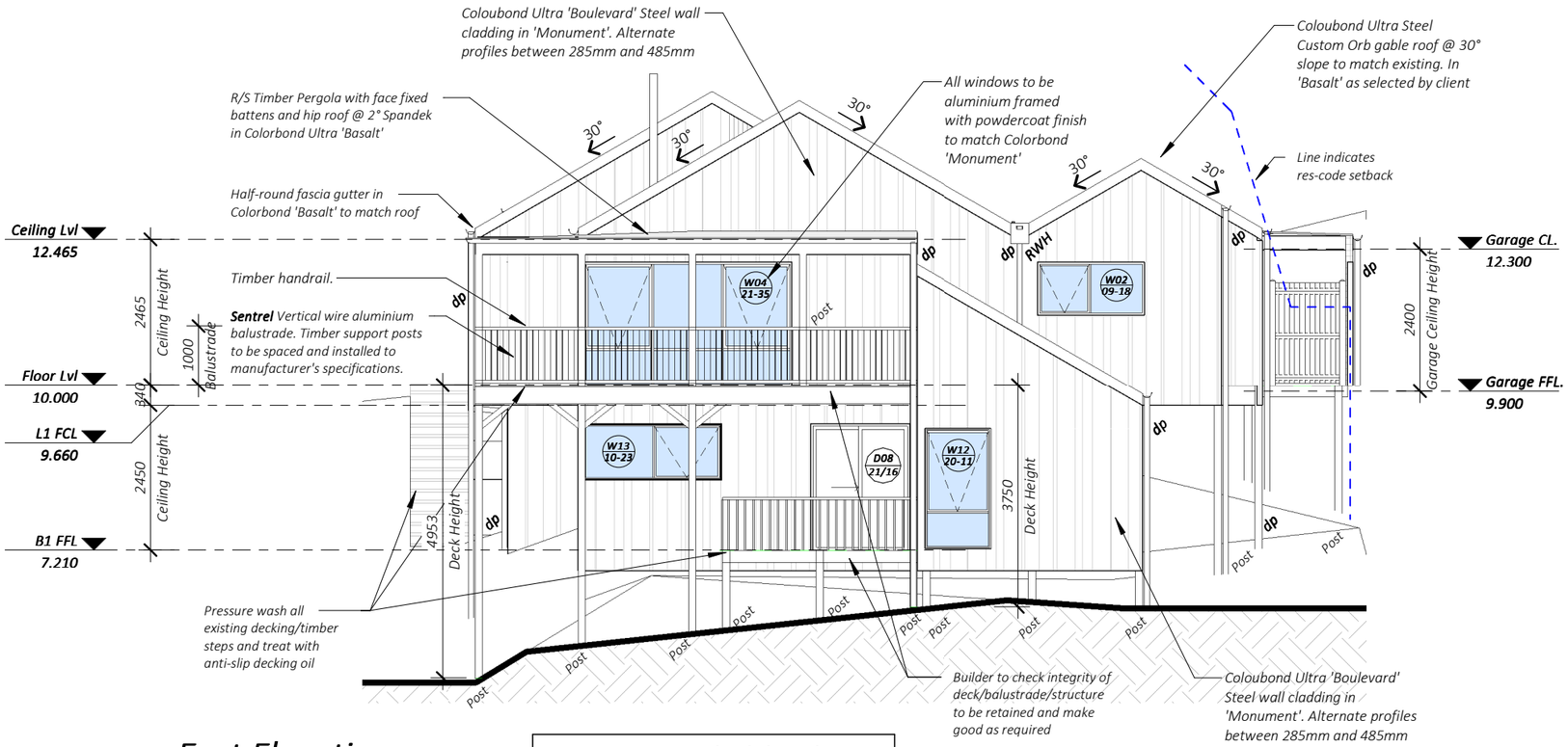

East Elevation

Scale: 1 : 100

Note: Existing deck height in relation to NGL is unchanged

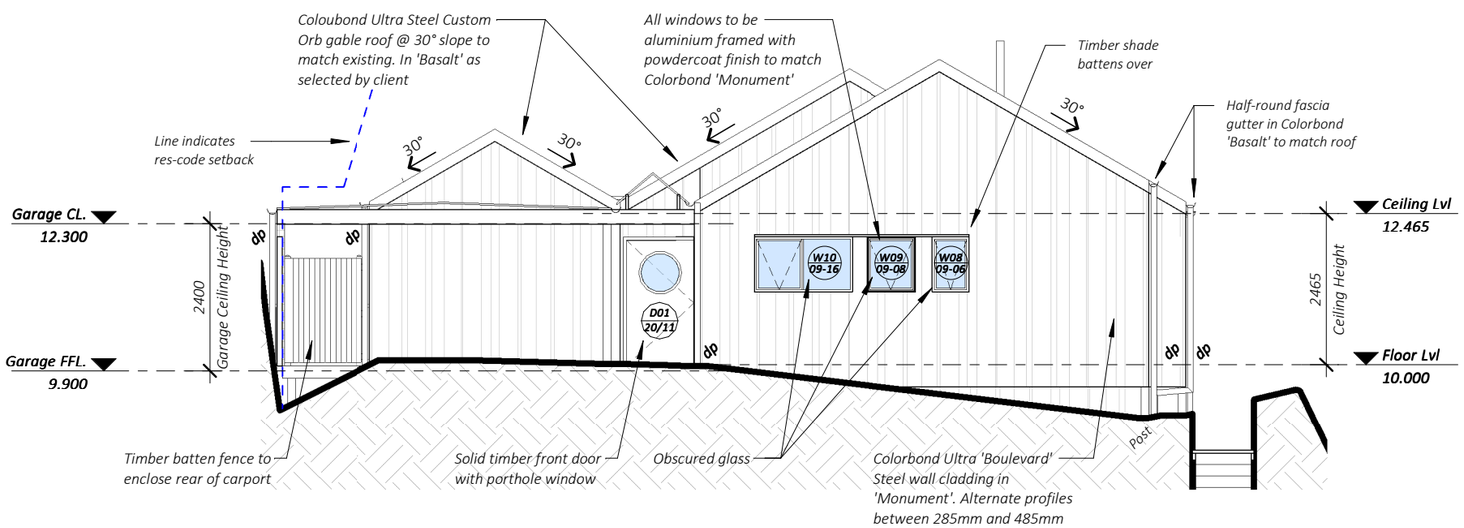

West Elevation

Scale: 1 : 100

Fielders "Boulevard" *express joint wall cladding in 285mm and 485mm widths.* ***Colorbond Ultra "Monument" Matte***

"Monument" *- Aluminium Window frames, painted external doors and existing retained timber posts, carport/pergola/deck framing*

Colorbond Custom Orb "Basalt" *- Roof cladding, including Edge Capping, Downpipes & Guttering*

Silvertop Ash Bevelled Edge R/S Battens *- Cantilever shade awning over windows to West Elevation*

Silvertop Ash - *Solid timber front door with natural finish*

Materials Legend

Revision Schedule		
Revision	Issue:	Date
A	Client Concept	20/07/2022
B	Client Brief - Rev B	22/07/2022
C	Client Changes - Rev C	28/7/2022
D	Issue for Planning	4/8/2022
E	Preliminary WDs	25/10/2022
F	Issue for Construction	2/11/2022

© Design Copyright - Meenks Ink Design
This drawing is Copyright and property of the Designer and must not be retained, used or copied for any other project without the Designer's written authority.

Design Matters National
Meenks Ink. Design
Registered Building Practitioner DP-AD 45288
admin@meenksink.com.au 0427 008 190

Issue for Construction

THE CONTRACTOR SHALL VERIFY ALL DIMENSIONS WITH SITE CONDITIONS AND REFER ANY DISCREPANCIES TO THE BUILDER/DESIGNER PRIOR TO COMMENCING WORK.
DO NOT SCALE DRAWING.
WRITTEN DIMENSIONS SHALL TAKE PRECEDENCE OVER SCALED DIMENSIONS. ALL ANOMALIES SHALL BE REFERRED TO THE BUILDER/DESIGNER FOR CLARIFICATION BEFORE PUTTING WORK IN HAND.
ALL CARE HAS BEEN TAKEN TO ENSURE THE ACCURACY OF EXISTING CONDITIONS, EXACT SCOPE OF WORKS MAY VARY AS A RESULT OF UNFORESEEABLE FACTORS WITHIN ENCLOSED SPACES OF STRUCTURE OF BUILDING.

CLIENT: Rocco & Leah Mezzatesta
PROJECT: Internal Alterations and Addition **PROJECT No:** 22-031
ADDRESS: 9 Summerhills Ave. Lorne
DWG TITLE: Elevations
DATE: November 2022 **DRAWN BY:** DK **SCALE @ A3:** 1 : 100

SHEET No: A010

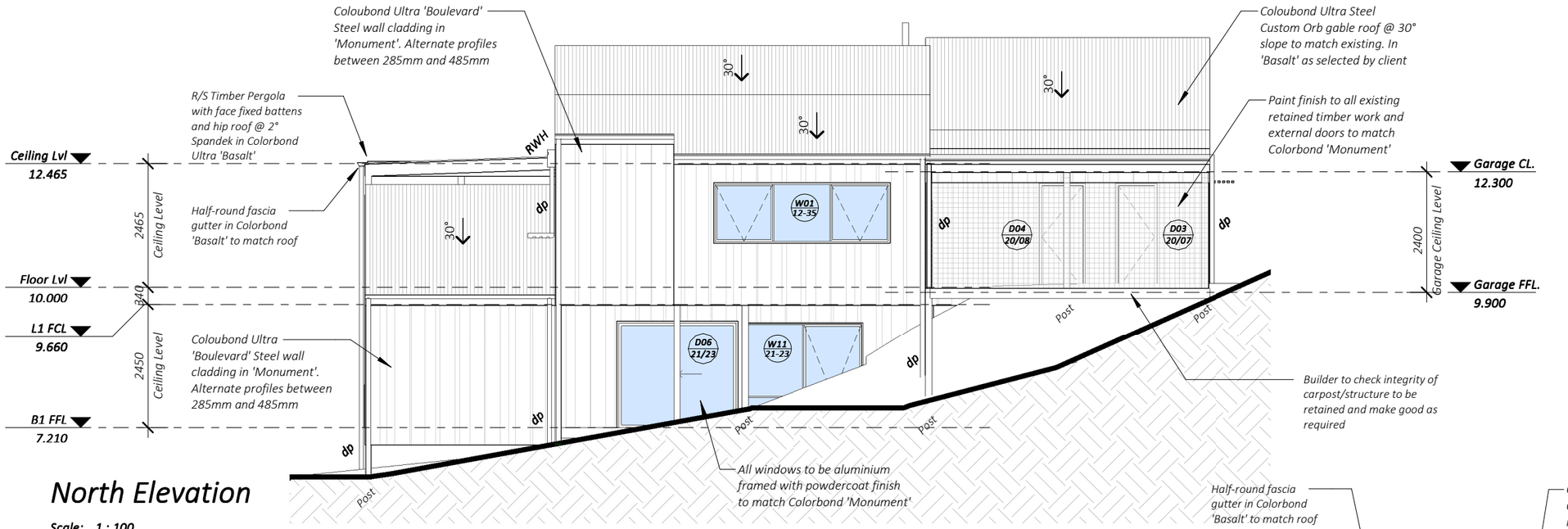

North Elevation

Scale: 1 : 100

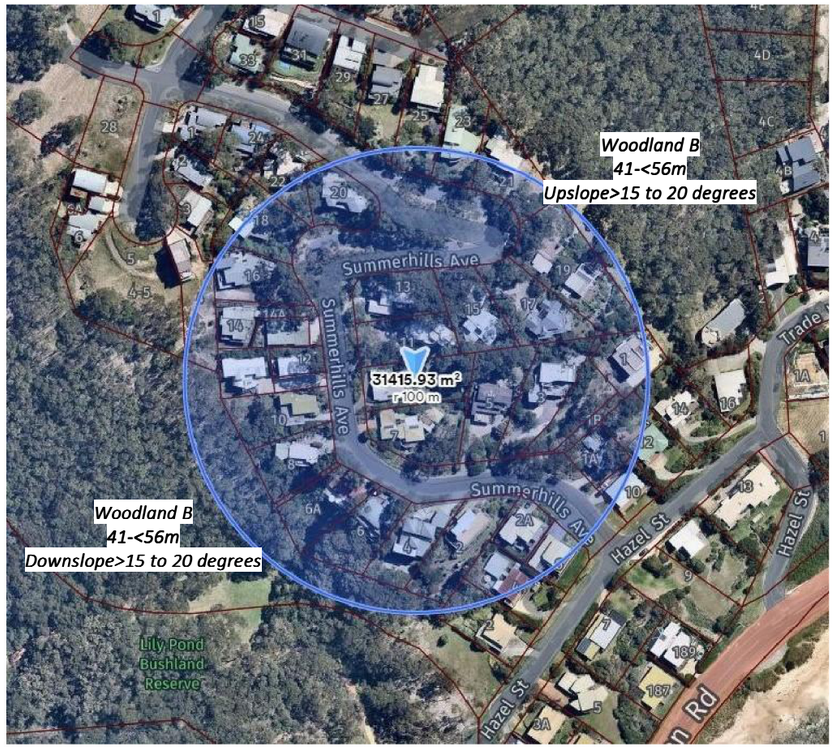

BAL Plan

Scale: 1 : 2000

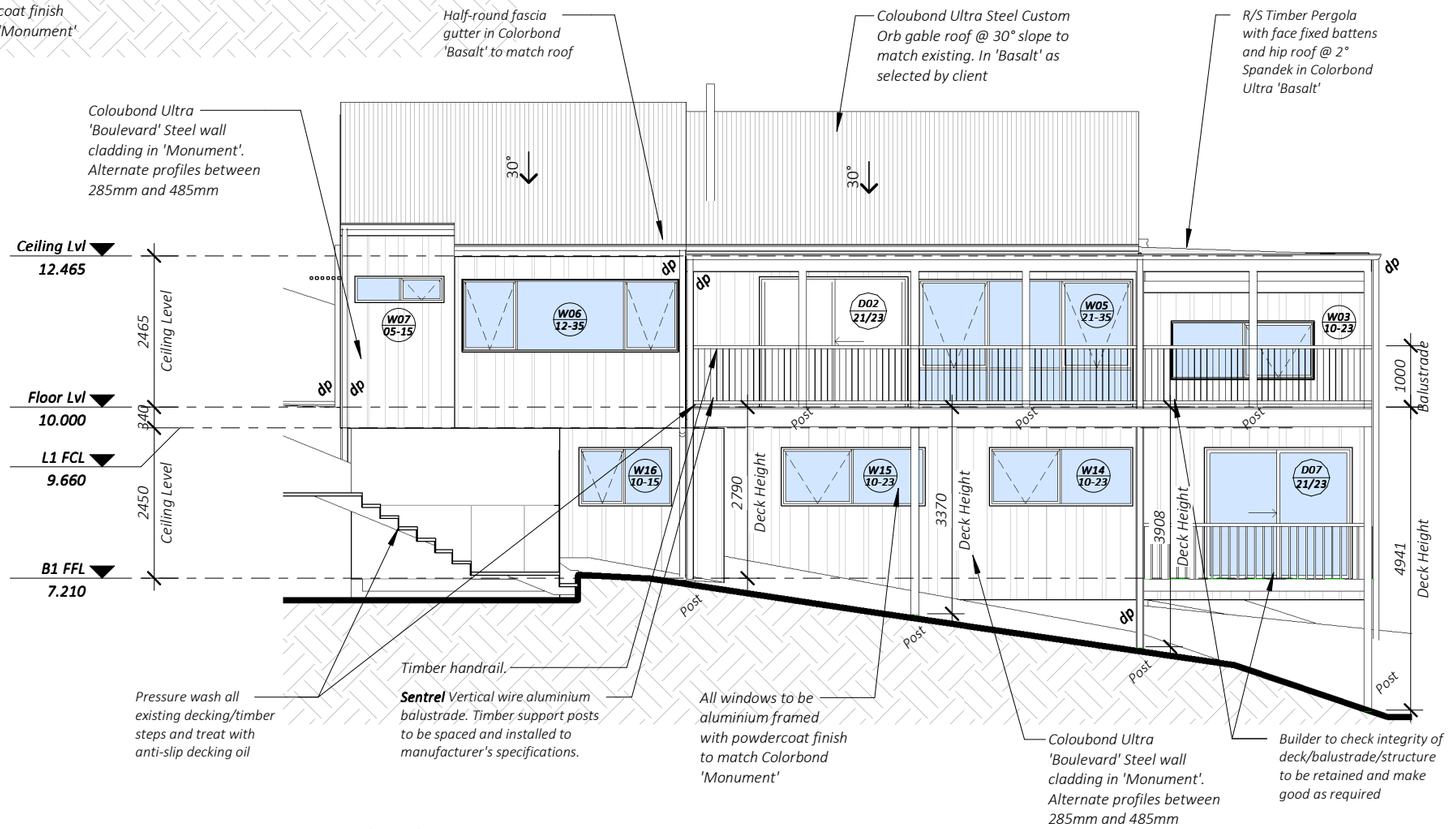

South Elevation

Scale: 1 : 100

Note: Existing deck height in relation to NGL is unchanged

Revision Schedule		
Revision	Issue:	Date
A	Client Concept	20/07/2022
B	Client Brief - Rev B	22/07/2022
C	Client Changes - Rev C	28/7/2022
D	Issue for Planning	4/8/2022
E	Preliminary WDs	25/10/2022
F	Issue for Construction	2/11/2022

© Design Copyright - Meenks Ink Design
This drawing is Copyright and property of the Designer and must not be retained, used or copied for any other project without the Designer's written authority.

Design Matters National
Meenks Ink. Design
Registered Building Practitioner DP-AD 45288
admin@meenksink.com.au 0427 008 190

Issue for Construction

THE CONTRACTOR SHALL VERIFY ALL DIMENSIONS WITH SITE CONDITIONS AND REFER ANY DISCREPANCIES TO THE BUILDER/DESIGNER PRIOR TO COMMENCING WORK.
DO NOT SCALE DRAWING.
WRITTEN DIMENSIONS SHALL TAKE PRECEDENCE OVER SCALED DIMENSIONS. ALL ANOMALIES SHALL BE REFERRED TO THE BUILDER/DESIGNER FOR CLARIFICATION BEFORE PUTTING WORK IN HAND.
ALL CARE HAS BEEN TAKEN TO ENSURE THE ACCURACY OF EXISTING CONDITIONS, EXACT SCOPE OF WORKS MAY VARY AS A RESULT OF UNFORESEEABLE FACTORS WITHIN ENCLOSED SPACES OF STRUCTURE OF BUILDING.

CLIENT: Rocco & Leah Mezzatesta
PROJECT: Internal Alterations and Addition **PROJECT No:** 22-031
ADDRESS: 9 Summerhills Ave. Lorne
DWG TITLE: Elevations
DATE: November 2022 **DRAWN BY:** DK **SCALE @ A3:** As indicated

SHEET No: A011

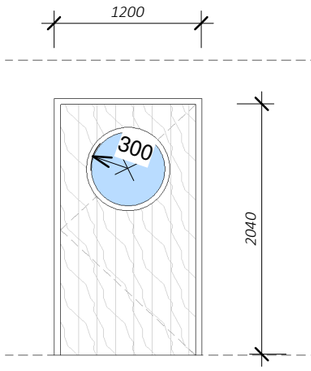

D01

DOOR TYPE 1
2040 x 1200mm Solid timber pivot door with porthole window.
Type & finish to be selected by client.
Semi-gloss finish to architrave.

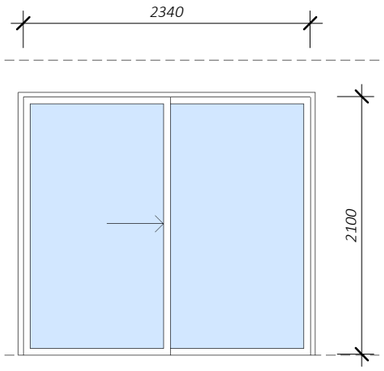

D02, D07

DOOR TYPE 2
2100 x 2340mm Glazed 2 panel sliding door.
Aluminium frame with powdercoat finish as selected by owners. **Provide opaque marking to glazed panels as per NCC Clause 3.6.4.6 Visibility of Glazing.**
Grade A safety glass.
Semi-gloss finish to architrave.
Refer to energy rating for SHGC & U - values.

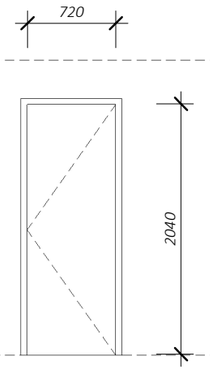

D03

DOOR TYPE 3
2040 x 720mm External grade solid flush swing door.
Semi-gloss finish to panel and architrave.

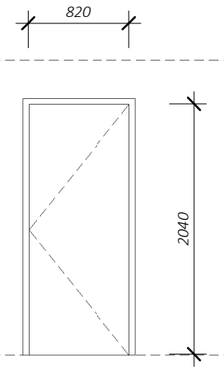

D04, D05

DOOR TYPE 4
2040 x 720mm External grade solid flush swing door.
Semi-gloss finish to panel and architrave.

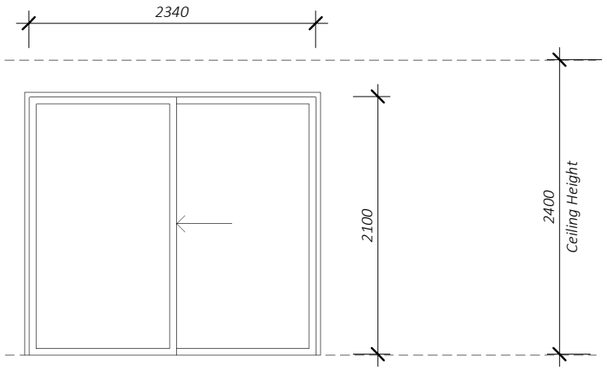

D06

DOOR TYPE 5
2100 x 2340mm Glazed 2 panel sliding door.
Aluminium frame with powdercoat finish as selected by owners. **Provide opaque marking to glazed panels as per NCC Clause 3.6.4.6 Visibility of Glazing.**
Grade A safety glass.
Semi-gloss finish to architrave.
Refer to energy rating for SHGC & U - values.

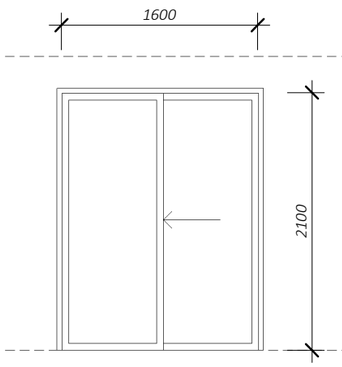

D08

DOOR TYPE 6
2100 x 1600mm Glazed 2 panel sliding door.
Aluminium frame with powdercoat finish as selected by owners. **Provide opaque marking to glazed panels as per NCC Clause 3.6.4.6 Visibility of Glazing.**
Grade A safety glass.
Semi-gloss finish to architrave.
Refer to energy rating for SHGC & U - values.

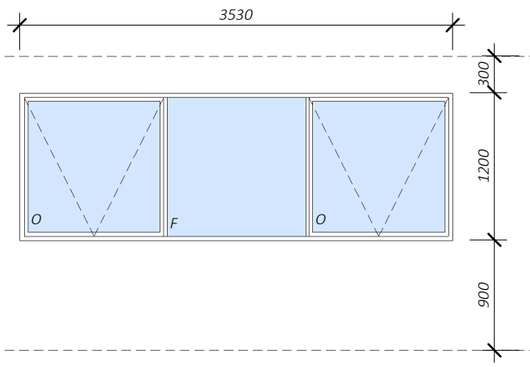

W01, W06

WINDOW TYPE 1
1200 x 3530mm Awning window with center fixed panel.
Lockable winder to awning.
Aluminium frame with powdercoat finish as selected by owners.
Refer to energy rating for SHGC & U - values.

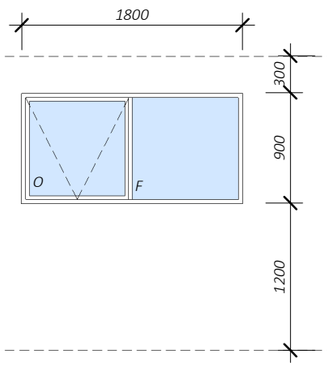

W02

WINDOW TYPE 2
900 x 1800mm Awning window with adjacent fixed panel.
Lockable winder to awning.
Aluminium frame with powdercoat finish as selected by owners.
Refer to energy rating for SHGC & U - values.

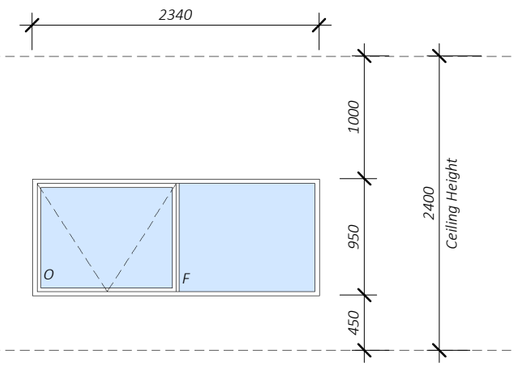

W03

WINDOW TYPE 3
950 x 2340mm Awning window with adjacent fixed panel.
Lockable winder to awning.
Aluminium frame with powdercoat finish as selected by owners. **Grade A safety glass.**
Refer to energy rating for SHGC & U - values.

Door and Window sizes are nominal only, final dimensions to be verified with manufacturer. All glazing to comply with AS 1288, AS 3959 and NCC part 3.6.

Supply steel mesh flyscreens to all external doors and operable windows

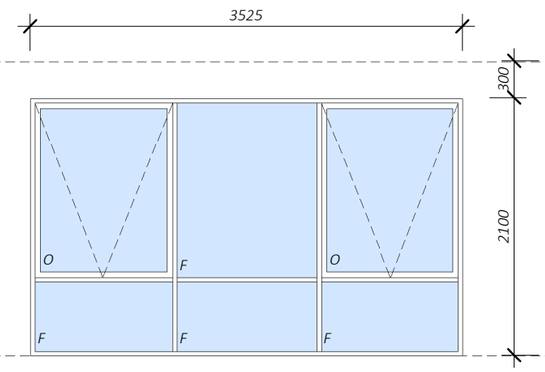

W04, W05

WINDOW TYPE 4
2100 x 3525mm Awning window with center fixed panel and fixed panel below. **Grade A safety glass to panes below 600mm above FFL.**
Lockable winder to awning. Aluminium frame with powdercoat finish as selected by owners. Refer to energy rating for SHGC & U - values.

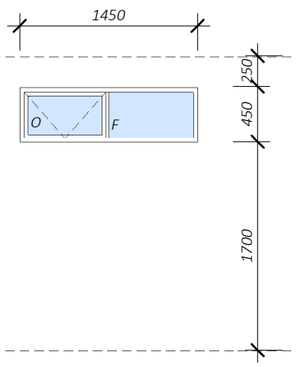

W07

WINDOW TYPE 5
450 x 1450mm Awning window with adjacent fixed panel .
Lockable winder to awning. **Grade A safety glass.**
Aluminium frame with powdercoat finish as selected by owners.
Refer to energy rating for SHGC & U - values.

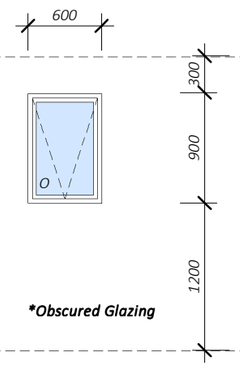

***Obscured Glazing**

W08

WINDOW TYPE 6
900 x 600mm Awning window.
Lockable winder to awning.
Aluminium frame with powdercoat finish as selected by owners.
Refer to energy rating for SHGC & U - values.

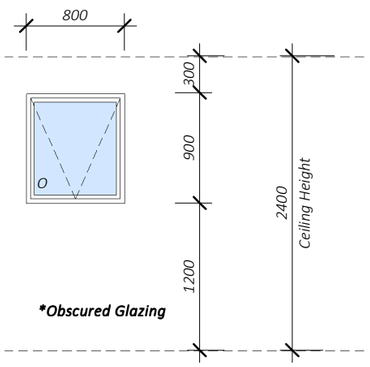

***Obscured Glazing**

W09

WINDOW TYPE 7
900 x 800mm Awning window.
Lockable winder to awning.
Aluminium frame with powdercoat finish as selected by owners.
Refer to energy rating for SHGC & U - values.

Design Matters National

Meenks Ink. Design
Registered Building Practitioner
DP-AD 45288
admin@meenksink.com.au 0427 008 190

CLIENT:	Rocco & Leah Mezzatesta	**DRAWN BY:**	DK
PROJECT:	Internal Alterations and Addition	**PROJECT No:**	22-031
ADDRESS:	9 Summerhills Ave. Lorne		
DWG TITLE:	Door & Window Schedule		
DATE:	November 2022	**SCALE @ A3:**	1 : 50

Issue for Construction

THE CONTRACTOR SHALL VERIFY ALL DIMENSIONS WITH SITE CONDITIONS AND REFER ANY DISCREPANCIES TO THE BUILDER/DESIGNER PRIOR TO COMMENCING WORK.
DO NOT SCALE DRAWING.
WRITTEN DIMENSIONS SHALL TAKE PRECEDENCE OVER SCALED DIMENSIONS. ALL ANOMALIES SHALL BE REFERRED TO THE BUILDER/DESIGNER FOR CLARIFICATION BEFORE PUTTING WORK IN HAND.
ALL CARE HAS BEEN TAKEN TO ENSURE THE ACCURACY OF EXISTING CONDITIONS, EXACT SCOPE OF WORKS MAY VARY AS A RESULT OF UNFORESEEABLE FACTORS WITHIN ENCLOSED SPACES OF STRUCTURE OF BUILDING.

Revision Schedule

Revision	Issue:	Date
A	Client Concept	20/07/2022
B	Client Brief - Rev B	22/07/2022
C	Client Changes - Rev C	28/7/2022
D	Issue for Planning	4/8/2022
E	Preliminary WDs	25/10/2022
F	Issue for Construction	2/11/2022

© Design Copyright - Paul Meenks
This drawing is Copyright and property of the Designer and must not be retained, used or copied for any other project without the Designer's written authority.

SHEET No:

A015

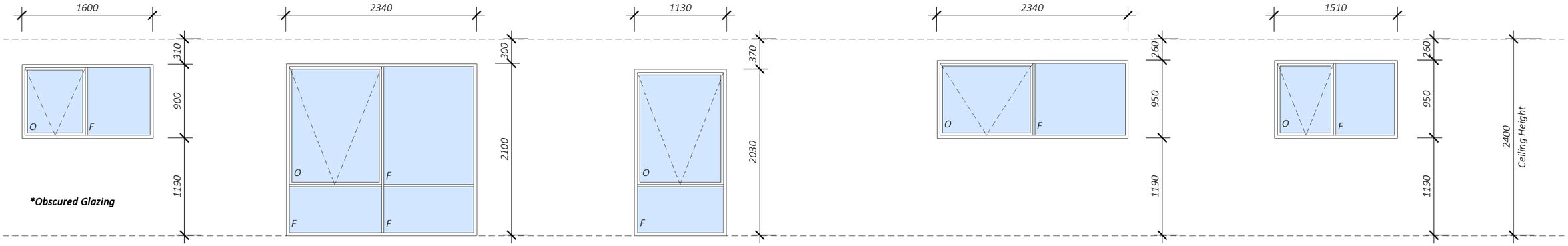

W10

WINDOW TYPE 8

900 x 1600mm Awning window with adjacent fixed panel.
Lockable winder to awning.
Aluminium frame with powdercoat finish as selected by owners.
Refer to energy rating for SHGC & U - values.

W11

WINDOW TYPE 9

2100 x 2340mm Awning window with adjacent fixed panel and fixed panel below.
Lockable winder to awning. ***Grade A safety glass to panes below 600mm above FFL.***
Aluminium frame with powdercoat finish as selected by owners.
Refer to energy rating for SHGC & U - values.

W12

WINDOW TYPE 10

2030 x 1130mm Awning window with adjacent fixed below.
Lockable winder to awning. ***Grade A safety glass to panes below 600mm above FFL.***
Aluminium frame with powdercoat finish as selected by owners.
Refer to energy rating for SHGC & U - values.

W13, W14, W15

WINDOW TYPE 11

950 x 2340mm Awning window with adjacent fixed panel.
Lockable winder to awning.
Aluminium frame with powdercoat finish as selected by owners.
Refer to energy rating for SHGC & U - values.

W16

WINDOW TYPE 12

950 x 1510mm Awning window with adjacent fixed panel .
Lockable winder to awning.
Grade A safety glass.
Aluminium frame with powdercoat finish as selected by owners.
Refer to energy rating for SHGC & U - values.

Window Schedule

Window No.	Location	Height	Width	Head Height	Material	Operation	U-Value	SHGC
W01	Living	1200	3530	2100	Aluminium	Awning	3.00	0.41
W02	P'try	900	1800	2100	Aluminium	Awning	3.00	0.41
W03	Deck	950	2340	1400	Aluminium	Awning	3.00	0.41
W04	Deck	2100	3525	2100	Aluminium	Awning	3.00	0.41
W05	Deck	2100	3525	4890	Aluminium	Awning	3.00	0.41
W06	Bed 1	1200	3530	2100	Aluminium	Awning	3.00	0.41
W07	Ensuite	450	1450	2150	Aluminium	Awning	3.00	0.41
W08	Pdr.	900	600	2100	Aluminium	Awning	3.00	0.41
W09	Kitchen/Lounge/Dining	900	800	2100	Aluminium	Awning	3.00	0.41
W10	L'dry	900	1600	2100	Aluminium	Awning	3.00	0.41
W11	Rumpus	2100	2340	2360	Aluminium	Awning	3.00	0.41
W12	Bed 4	2030	1130	2060	Aluminium	Awning	3.00	0.41
W13	Bed 3	950	2340	2140	Aluminium	Awning	3.00	0.41
W14	Bed 3	950	2340	2140	Aluminium	Awning	3.00	0.41
W15	Bed 2	950	2340	2140	Aluminium	Awning	3.00	0.41
W16	Bath	950	1510	2140	Aluminium	Awning	3.00	0.41

Grand total: 16

Door Schedule

Door No.	Location	Height	Width	Material	Operation	U-Value	SHGC
D01	Kitchen/Lounge/Dining	2040	1100	Aluminium	Pivot Door	N/A	0.51
D02	Deck	2100	2340	Aluminium	Sliding Door	2.06	0.51
D06	Rumpus	2100	2340	Aluminium	Sliding Door	2.06	0.51
D07	Bed 4	2100	2340	Aluminium	Sliding Door	2.06	0.51
D08	Rumpus	2100	1600	Aluminium	Sliding Door	2.06	0.51

Grand total: 5

Door and Window sizes are nominal only, final dimensions to be verified with manufacturer. All glazing to comply with AS 1288, AS 3959 and NCC part 3.6.

Supply steel mesh flyscreens to all external doors and operable windows

Revision Schedule

Revision	Issue:	Date
A	Client Concept	20/07/2022
B	Client Brief - Rev B	22/07/2022
C	Client Changes - Rev C	28/7/2022
D	Issue for Planning	4/8/2022
E	Preliminary WDs	25/10/2022
F	Issue for Construction	2/11/2022

© Design Copyright - Meenks Ink Design
This drawing is Copyright and property of the Designer and must not be retained, used or copied for any other project without the Designer's written authority.

Design Matters National
Meenks Ink. Design
Registered Building Practitioner DP-AD 45288
admin@meenksink.com.au 0427 008 190

Issue for Construction

THE CONTRACTOR SHALL VERIFY ALL DIMENSIONS WITH SITE CONDITIONS AND REFER ANY DISCREPANCIES TO THE BUILDER/DESIGNER PRIOR TO COMMENCING WORK.
DO NOT SCALE DRAWING.
WRITTEN DIMENSIONS SHALL TAKE PRECEDENCE OVER SCALED DIMENSIONS. ALL ANOMALIES SHALL BE REFERRED TO THE BUILDER/DESIGNER FOR CLARIFICATION BEFORE PUTTING WORK IN HAND.
ALL CARE HAS BEEN TAKEN TO ENSURE THE ACCURACY OF EXISTING CONDITIONS, EXACT SCOPE OF WORKS MAY VARY AS A RESULT OF UNFORESEEABLE FACTORS WITHIN ENCLOSED SPACES OF STRUCTURE OF BUILDING.

CLIENT: *Rocco & Leah Mezzatesta*
PROJECT: *Internal Alterations and Addition* ***PROJECT No:*** *22-031*
ADDRESS: *9 Summerhills Ave. Lorne*
DWG TITLE: *Door & Window Schedule*
DATE: *November 2022* ***DRAWN BY:*** *DK* ***SCALE @ A3:*** *1 : 50*

SHEET No:
A016

BAL - 29 Construction Requirements

7.1 GENERAL

A building assessed in Section 2 as being BAL—29 shall comply with Section 3 and Clauses 7.2 to 7.8.

NOTE: There are a number of Standards that specify requirements for construction; however, where this Standard does not provide construction requirements for a particular element, the other Standards apply.

Any element of construction or system that satisfies the test criteria of AS 1530.8.1 may be used in lieu of the applicable requirements of Clauses 7.2 to 7.8, see Clause 3.8.

NOTE: BAL—29 is primarily concerned with protection from ember attack, increased likelihood of flame contact and radiant heat greater than 19 kW/m² and up to and including 29 kW/m².

7.2 SUBFLOOR SUPPORTS

This Standard does not provide construction requirements for subfloor supports where the subfloor space is enclosed with—

(a) a wall that complies with Clause 7.4, except that sarking is not required where specified in Clause 7.4.1 (c); or

(b) a mesh or perforated sheet with a maximum aperture of 2 mm, made of corrosion resistant steel, bronze or aluminium; or

(c) a combination of Items (a) and (b) above.

Where the subfloor space is unenclosed, the support posts, columns, stumps, piers and poles shall be—

(i) of non-combustible material; or

(ii) of bushfire-resisting timber; or

(iii) a combination of Items (i) and (ii) above.

NOTE: This requirement applies to the principal building only and not to verandas, decks, steps, ramps and landings (see Clause 7.7).

7.3 FLOORS

7.3.1 Concrete slabs on ground

This Standard does not provide construction requirements for concrete slabs on ground.

7.3.2 Elevated floors

7.3.2.1 Enclosed subfloor space

This Standard does not provide construction requirements for elevated floors, including bearers, joists and flooring, where the subfloor space is enclosed with—

(a) a wall that complies with Clause 7.4, except that sarking is not required where specified in Clause 7.4.1 (c); or

(b) a mesh or perforated sheet with a maximum aperture of 2 mm, made of corrosion resistant steel, bronze or aluminium; or

(c) a combination of Items (a) and (b) above.

7.3.2.2 Unenclosed subfloor space

Where the subfloor space is unenclosed, the bearers, joists and flooring, less than 400mm above finished ground level, shall be one of the following:

(a) Materials that comply with the following:

(i) Bearers and joists shall be—

(A) non-combustible; or

(B) bushfire-resisting timber; or

(C) a combination of Items (A) and (B) above.

(ii) Flooring shall be—

(A) non-combustible; or

(B) bushfire-resisting timber; or

(C) timber (other than bushfire-resisting timber), particleboard or plywood flooring where the underside is lined with sarking-type material or mineral wool insulation; or

(D) a combination of any of Items (A), (B) or (C) above. or

(b) A system complying with AS 1530.8.1

This Standard does not provide construction requirements for elements of elevated floors, including bearers, joists and flooring, if the underside of the element is 400 mm or more above finished ground level.

7.4 EXTERNAL WALLS

7.4.1 Walls

The exposed components of external walls shall be:

(a) Non-combustible material.e.g., full masonry, brick veneer, mud brick, concrete, aerated concrete). or

(b) Timber logs of a species with a density of 680 kg/m³ or greater at a 12% moisture content; of a minimum nominal overall thickness of 90 mm and a minimum thickness of 70mm (see Clause 3.11); and gauge planed, or

(c) Cladding that is fixed externally to a timber-framed or a steel-framed wall that is sarked on the outside of the frame, and is—

(i) fibre-cement, a minimum of 6 mm in thickness; or

(ii) steel sheet; or

(iii) bushfire-resisting timber (see Appendix F); or

(iv) a combination of any of Items (i), (ii) or (iii) above.or

(d) A combination of any of Items (a), (b), or (c) above.

7.4.2 Joints

All joints in the external surface material of walls shall be covered, sealed, overlapped, backed or butt-jointed to prevent gaps greater than 3mm.

7.4.3 Vents and weepholes

Vents and weepholes in external walls shall be screened with a mesh with a maximum aperture of 2mm, made of corrosion-resistant steel, bronze or aluminium, except where they are less than 3mm (see Clause 3.6).

7.5 EXTERNAL GLAZED ELEMENTS AND ASSEMBLIES AND EXTERNAL DOORS

7.5.1 Bushfire shutters

Where fitted, bushfire shutters shall comply with Clause 3.7 and be made from—

(a) non-combustible material; or

(b) bushfire-resisting timber; or

(c) a combination of Items (a) and (b) above.

7.5.1A Screens for windows and doors

Where fitted, screens for windows and doors shall have a mesh or perforated sheet with a maximum aperture of 2 mm, made of corrosion-resistant steel, bronze or aluminium. Gaps between the perimeter of the screen assembly and the building element to which it is fitted shall not exceed 3mm.

The frame supporting the mesh or perforated sheet shall be made from—

(a) metal; or

(b) bushfire-resisting timber.

7.5.2 Windows

Windows shall comply with one of the following:

(a) They shall be completely protected by a bushfire shutter that complies with Clause 7.5.1.or

(b) They shall comply with the following:

(i) Window frames and window joinery and shall be made from:

(A) Bushfire-resisting timber, or

(B) Metal. or

(C) Metal-reinforced PVC-U. The reinforcing members shall be made from aluminium, stainless steel, or corrosion-resistant steel, and the frame and the sash shall satisfy the design load, performance and structural strength of the member.

(ii) Externally fitted hardware that supports the sash in its functions of opening and closing shall be metal.

(iii) Glazing shall be toughened glass minimum 5 mm.

(iv) Where glazing is less than 400 mm from the ground or less than 400mm above decks, carport roofs, awnings and similar elements or fittings having an angle less than 18° to the horizontal and extending more than 110mm in width from the window frame, that portion shall be screened externally with a screen that complies with Clause 7.5.1A.

(v) The openable portions of windows shall be screened internally or externally with screens that comply with Clause 7.5.1A.

7.5.3 Doors—Side-hung external doors (including French doors, panel fold and bi-fold doors)

Side-hung external doors, including French doors, panel fold and bi-fold doors, shall comply with one of the following:

(a) Doors and door frames shall be protected by bushfire shutters that comply with Clause 7.5.1.or

(b) Doors and door frames shall be protected externally by screens that comply with Clause 7.5.1A. or

(c) Doors and door frames shall comply with the following:

(i) Doors shall be—

(A) non-combustible; or

(B) a solid timber door, having a minimum thickness of 35mm for the first 400mm above the threshold; or

(C) a door, including a hollow core door, protected externally by a screen that complies with Clause 7.5.1A; or

(D) a fully framed glazed door, where the framing is made from non-combustible materials or from bushfire-resisting timber

(ii) Externally fitted hardware that supports the panel in its functions of opening and closing shall be metal.

(iii) Where doors incorporate glazing, the glazing shall be toughened glass minimum 6mm.

(iv) Where glazing is less than 400 mm from the ground or less than 400mm above decks, carport roofs, awnings and similar elements or fittings having an angle less than 18° to the horizontal and extending more than 110 mm in width from the door, that portion shall be screened externally with screens that comply with Clause 7.5.1A.

(v) Door frames shall be made from:

(A) Bushfire-resisting timber. or

(B) Metal. or

(C) Metal-reinforced PVC-U. The reinforcing members shall be made from aluminium, stainless steel, or corrosion-resistant steel and the door assembly shall satisfy the design load, performance and structural strength of the member.

(vi) Doors shall be tight-fitting to the door frame and to an abutting door, if applicable.

(vii) Weather strips, draught excluders or draught seals shall be installed at the base of side-hung external doors

7.5.4 Doors—Sliding doors

Sliding doors shall comply with one of the following:

(a) They shall be protected by a bushfire shutter that complies with Clause 7.5.1. or

(b) They shall be completely protected externally by screens that comply with Clause 7.5.1A. or

(c) They shall comply with the following:

(i) Both the door frame supporting the sliding door and the framing surrounding any glazing shall be made from:

(A) Bushfire-resisting timber; or

(B) Metal; or

(C) Metal-reinforced PVC-U. The reinforcing members shall be made from aluminium, stainless steel, or corrosion-resistant steel and the door assembly shall satisfy the design load, performance and structural strength of the member.

(ii) Externally fitted hardware that supports the panel in its functions of opening and closing shall be metal.

(iii) Where sliding doors incorporate glazing, the glazing shall be toughened glass minimum 6mm.

(iv) Sliding doors shall be tight-fitting in the frames.

7.5.5 Doors—Vehicle access doors (garage doors)

The following apply to vehicle access doors:

(a) Vehicle access doors shall be made from—

(i) non-combustible material; or

(ii) bushfire-resisting timber; or

(iii) fibre-cement sheet, a minimum of 6 mm in thickness; or

(iv) a combination of any of Items (i), (ii) or (iii) above.

(b) Panel lift, tilt doors or side-hung doors shall be fitted with suitable weather strips, draught excluders, draught seals or guide tracks, as appropriate to the door type, with a maximum gap no greater than 3mm.

(c) Roller doors shall have guide tracks with a maximum gap no greater than 3mm and shall be fitted with a nylon brush that is in contact with the door

(d) Vehicle access doors shall not include ventilation slots.

7.6 ROOFS (INCLUDING VERANDA AND ATTACHED CARPORT ROOFS, PENETRATIONS, EAVES, FASCIAS, GABLES, GUTTERS AND DOWNPIPES)

7.6.1 General

The following apply to all types of roofs and roofing systems:

(a) Roof tiles, roof sheets and roof-covering accessories shall be non-combustible.

(b) The roof/wall junction shall be sealed, to prevent openings greater than 3mm, either by the use of fascia and eaves linings or by sealing between the top of the wall and the underside of the roof and between the rafters at the line of the wall.

(c) Roof ventilation openings, such as gable and roof vents, shall be fitted with ember guards made of non-combustible material or a mesh or perforated sheet with a maximum aperture of 2mm, made of corrosion-resistant steel, bronze or aluminium.

(d) A pipe or conduit that penetrates the roof covering shall be non-combustible.

7.6.2 Tiled roofs

Tiled roofs shall be fully sarked. The sarking shall—

(a) be located on top of the roof framing, except that the roof battens may be fixed above the sarking;

(b) cover the entire roof area including ridges and hips; and

(c) extend into gutters and valleys.

7.6.3 Sheet roofs

Sheet roofs shall—

(a) be fully sarked in accordance with Clause 7.6.2, except that foil-backed insulation blankets may be installed over the battens; and

(b) have any gaps greater than 3mm (such as under corrugations or ribs of sheet roofing and between roof components) sealed at the fascia or wall line and at valleys, hips and ridges by—

(i) a mesh or perforated sheet with a maximum aperture of 2mm, made of corrosion-resistant steel, bronze or aluminium; or

(ii) mineral wool; or

(iii) other non-combustible material; or

(iv) a combination of any of Items (i), (ii) or (iii) above

7.6.4 Veranda, carport and awning roofs

The following apply to veranda, carport and awning roofs:

(a) A veranda, carport or awning roof forming part of the main roof space shall meet all the requirements for the main roof, as specified in Clauses 7.6.1, 7.6.2, 7.6.3, 7.6.5 and 7.6.6.

(b) A veranda, carport or awning roof separated from the main roof space by an external wall complying with Clause 7.4 shall have a non-combustible roof covering and the support structure shall be—

(i) of non-combustible material; or

(ii) bushfire-resisting timber; or

(iii) timber rafters lined on the underside with fibre-cement sheeting a minimum of 6mm in thickness, or with material complying with AS 1530.8.1; or

(iv) a combination of any of Items (i), (ii) or (iii) above.

7.6.5 Roof penetrations

The following apply to roof penetrations:

(a) Roof penetrations, including roof lights, roof ventilators, roof-mounted evaporative cooling units, aerials, vent pipes and supports for solar collectors, shall be adequately sealed at the roof to prevent gaps greater than 3mm. The material used to flash the penetration shall be non-combustible.

(b) Openings in vented roof lights, roof ventilators or vent pipes shall be fitted with ember guards made from a mesh or perforated sheet with a maximum aperture of 2mm, made of corrosion-resistant steel, bronze or aluminium. The requirements of this Item (b) do not apply to the exhaust flues of heating or cooking devices with closed combustion chambers. In the case of gas appliance flues, ember guards shall not be fitted.

NOTE: Gasfitters are required to provide a metal flue pipe above the roof and terminate with a certified gas flue cowl complying with AS 4566. Advice may be obtained from State gas technical regulators.

(c) All overhead glazing shall be Grade A safety glass complying with AS 1288.

(d) Glazed elements in roof lights and skylights may be of polymer provided a Grade A safety glass diffuser, complying with AS 1288, is installed under the glazing. Where glazing is an insulating glazing unit (IGU), Grade A toughened safety glass minimum 4mm, shall be used in the outer pane of the IGU.

(e) Flashing elements of tubular skylights shall be non-combustible. However, they may be of an alternative material, provided the integrity of the roof covering is maintained by an under-flashing made of non-combustible material.

(f) Where roof lights are installed in roofs having a pitch of less than 18° to the horizontal, the glazing shall be protected with ember guards made from a mesh or perforated sheet with a maximum aperture of 2mm, made of corrosion resistant steel, bronze or aluminium.

(g) Evaporative cooling units shall be fitted with butterfly closers at or near the ceiling level, or the unit shall be fitted with non-combustible covers with a mesh or perforated sheet with a maximum aperture of 2mm, made of corrosion resistant steel, bronze or aluminium.

(h) External single plane glazed elements of roof lights and skylights, where the pitch of the glazed element is 18° or less to the horizontal, shall be protected with ember guards made from a mesh or perforated sheet with a maximum aperture of 2mm, made of corrosion-resistant steel, bronze or aluminium.

7.6.6 Eaves linings, fascias and gables

The following apply to eaves linings, fascias and gables:

(a) Joints in eaves linings, fascias and gables may be sealed with plastic joining strips or timber storm moulds.

(b) Gables shall comply with Clause 7.4.

(c) Fascias and bargeboards shall—

(i) where timber is used, be made from bushfire-resisting timber; or

(ii) where made from metal, be fixed at 450 mm centres; or

(iii) be a combination of Items (i) and (ii) above.

(d) Eaves linings shall be—

(i) fibre-cement sheet, a minimum 4.5 mm in thickness; or

(ii) bushfire-resisting timber; or

(iii) a combination of Items (i) and (ii) above.

(e) Eaves penetrations shall be protected the same as for roof penetrations

(f) Eaves ventilation openings greater than 3 mm shall be fitted with ember guards made of non-combustible material or a mesh or perforated sheet with a maximum aperture of 2mm, made of corrosion-resistant steel, bronze or aluminium.

7.6.7 Gutters and downpipes

This Standard does not provide construction-specific material requirements for downpipes. If installed, gutter and valley leaf guards shall be non-combustible. With the exception of box gutters, gutters shall be metal or PVC-U. Box gutters shall be non-combustible and flashed at the junction with the roof, with non-combustible materials.

7.7 VERANDAS, DECKS, STEPS, RAMPS AND LANDINGS

7.7.1 General

Decking may be spaced.

There is no requirement to enclose the subfloor spaces of verandas, decks, steps, ramps or landings.

7.7.2 Enclosed subfloor spaces of verandas, decks, steps, ramps and landings

7.7.2.1 Materials to enclose a subfloor space

The subfloor spaces of verandas, decks, steps, ramps and landings are deemed to be 'enclosed' when—

(a) the material used to enclose the subfloor space complies with Clause 7.4, except that sarking is not required where specified in Clause 7.4.1 (c); and

(b) all openings greater than 3 mm are screened with a mesh or perforated sheet with a maximum aperture of 2 mm, made of corrosion-resistant steel, bronze or aluminium.

7.7.2.2 Supports

This Standard does not provide construction requirements for support posts, columns, stumps, stringers, piers and poles.

7.7.2.3 Framing

This Standard does not provide construction requirements for the framing of verandas, decks, ramps or landings (i.e., bearers and joists).

7.7.2.4 Decking, stair treads and the trafficable surfaces of ramps and landings

Decking, stair treads and the trafficable surfaces of ramps and landings shall be—

(a) of non-combustible material; or

(b) of bushfire-resisting timber; or

(c) a combination of Items (a) and (b) above.

7.7.3 Unenclosed subfloor spaces of verandas, decks, steps, ramps and landings

7.7.3.1 Supports

Support posts, columns, stumps, stringers, piers and poles shall be—

(a) of non-combustible material; or

(b) of bushfire-resisting timber; or

(c) a combination of Items (a) and (b) above.

7.7.3.2 Framing

Framing of verandas, decks, ramps or landings (i.e., bearers and joists) shall be—

(a) of non-combustible material; or

(b) of bushfire-resisting timber; or

(c) a combination of Items (a) and (b) above.

7.7.3.3 Decking, stair treads and the trafficable surfaces of ramps and landings

Decking, stair treads and the trafficable surfaces of ramps and landings shall be—

(a) of non-combustible material; or

(b) of bushfire-resisting timber; or

(c) a combination of Items (a) and (b) above.

7.7.4 Balustrades, handrails or other barriers

Those parts of the handrails and balustrades less than 125 mm from any glazing or any combustible wall shall be—

(a) of non-combustible material; or

(b) bushfire-resisting timber; or

(c) a combination of Items (a) and (b) above.

Those parts of the handrails and balustrades that are 125 mm or more from the building have no requirements.

7.8 WATER AND GAS SUPPLY PIPES

Above-ground, exposed water and gas supply pipes shall be metal.

Revision Schedule

Revision	Issue:	Date
A	Client Concept	20/07/2022
B	Client Brief - Rev B	22/07/2022
C	Client Changes - Rev C	28/7/2022
D	Issue for Planning	4/8/2022
E	Preliminary WDs	25/10/2022
F	Issue for Construction	2/11/2022

© Design Copyright - Meenks Ink Design
This drawing is Copyright and property of the Designer and must not be retained, used or copied for any other project without the Designer's written authority.

Design Matters National

Meenks Ink. Design
Registered Building Practitioner DP-AD 45288
admin@meenksink.com.au 0427 008 190

Issue for Construction

THE CONTRACTOR SHALL VERIFY ALL DIMENSIONS WITH SITE CONDITIONS AND REFER ANY DISCREPANCIES TO THE BUILDER/DESIGNER PRIOR TO COMMENCING WORK.
DO NOT SCALE DRAWING.
WRITTEN DIMENSIONS SHALL TAKE PRECEDENCE OVER SCALED DIMENSIONS. ALL ANOMALIES SHALL BE REFERRED TO THE BUILDER/DESIGNER FOR CLARIFICATION BEFORE PUTTING WORK IN HAND.
ALL CARE HAS BEEN TAKEN TO ENSURE THE ACCURACY OF EXISTING CONDITIONS, EXACT SCOPE OF WORKS MAY VARY AS A RESULT OF UNFORESEEABLE FACTORS WITHIN ENCLOSED SPACES OF STRUCTURE OF BUILDING.

CLIENT: Rocco & Leah Mezzatesta
PROJECT: Internal Alterations and Addition **PROJECT No:** 22-031
ADDRESS: 9 Summerhills Ave. Lorne
DWG TITLE: BAL Requirements
DATE: November 2022 **DRAWN BY:** DK **SCALE @ A3:** 1 : 100

SHEET No: A017