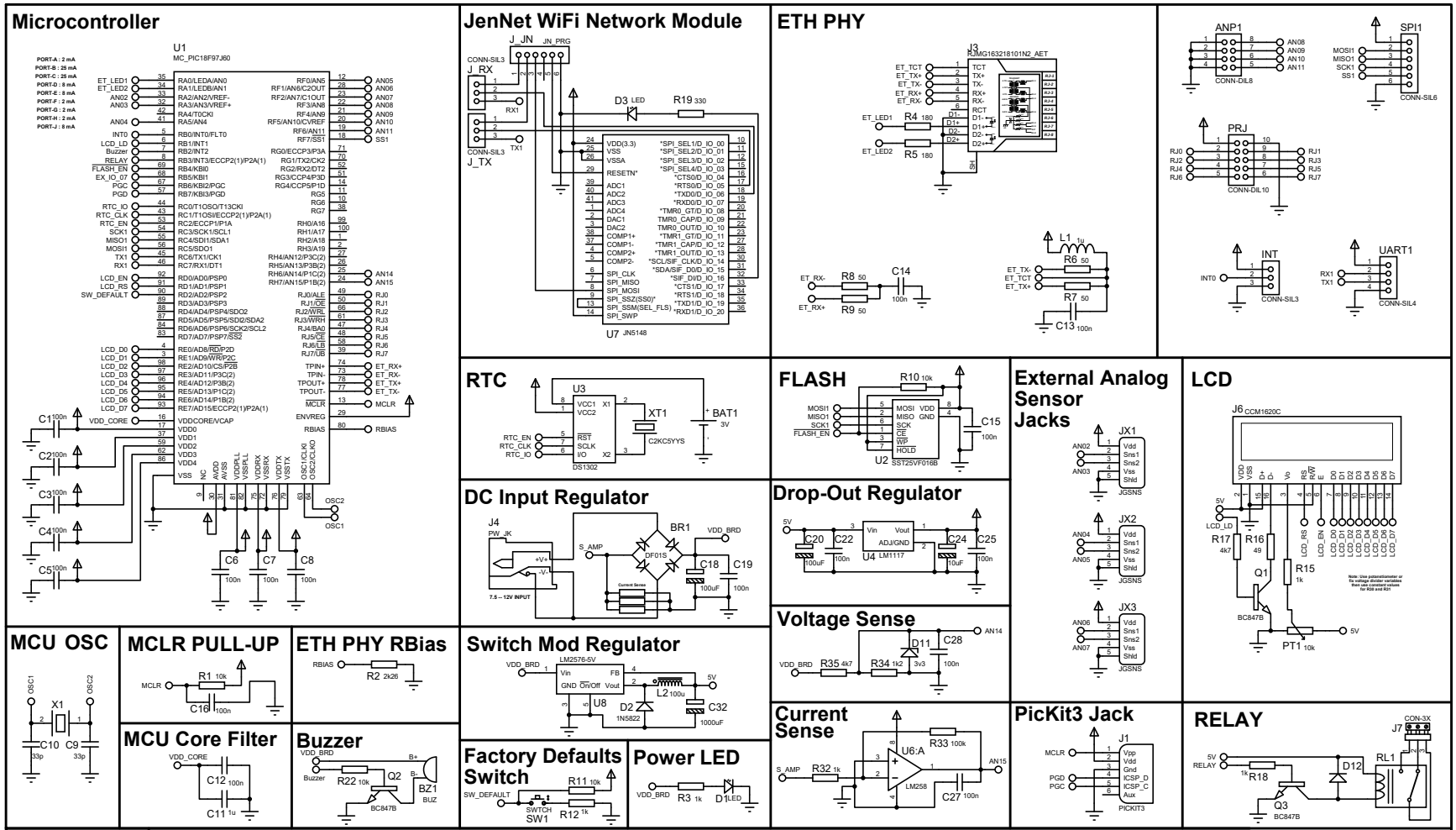

TITLE	SisDogX18 ETH for HOSPITAL (REV @ 07.06.2011)				
SHEET	MainBoardETH.DSN	START TIME	17.05.2011	RELEASE NOTES	Sisoft Healthcare Information Systems
TIME LINE	16.05.2011 - 03.06.2011	VERSION	VER.1	SisDogX18 Modüler Sensör takip sistemi	
CREATED BY	<NONE>	REVISION	<NONE>	PROJE BASKI DEVRE ÇÝZÝMÝ ÝLÝÞÝK DOSYADA	
EDITED BY	<NONE>	PAGE	1/1		