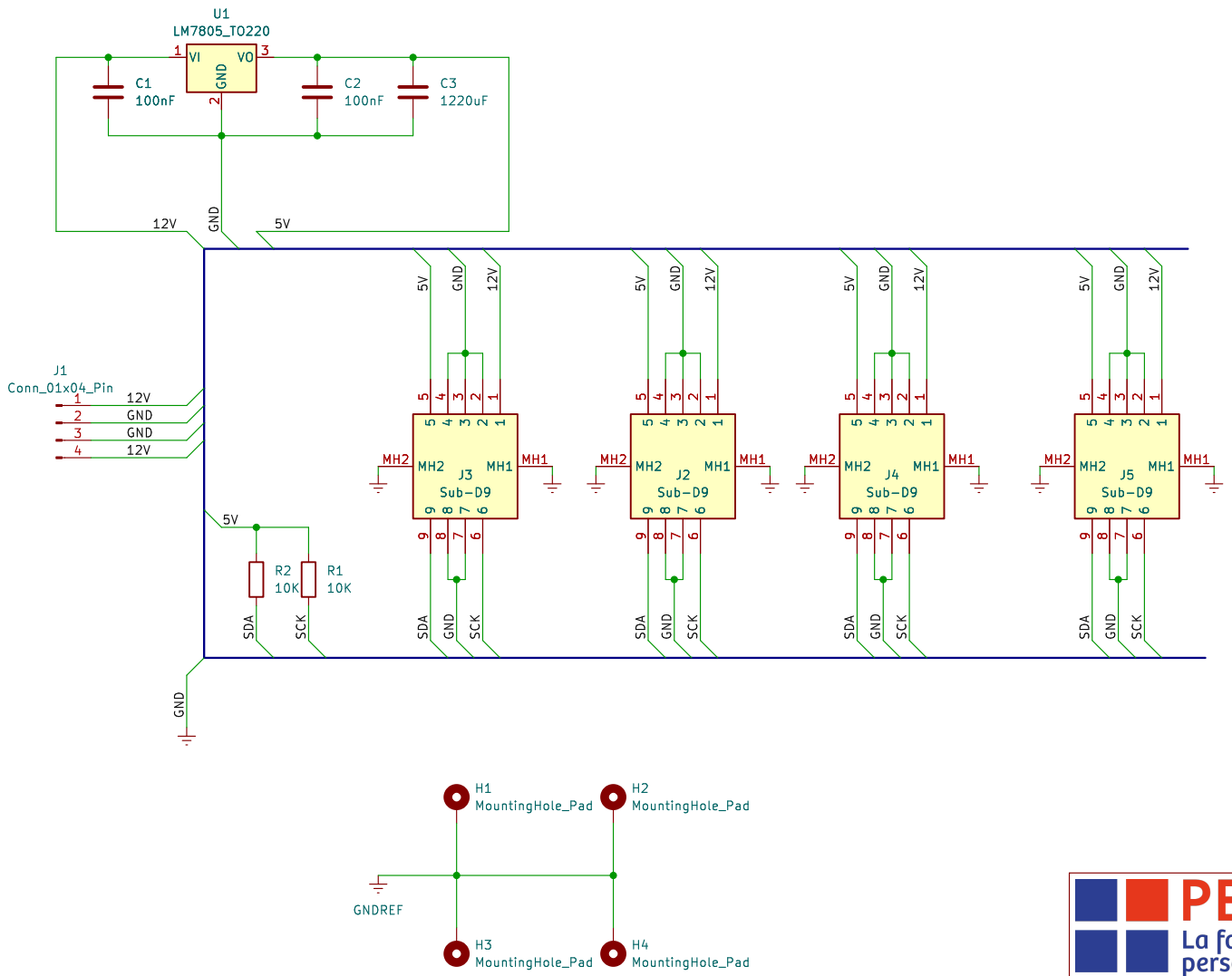

PERFO
La formation personnalisée

Sheet: /
File: Bus_fond_panier.kicad_sch

Title: Rack

Size: A4	Date: 2024-02-22	Rev:
KiCad E.D.A. kicad 8.0.0-rc1		Id: 1/1