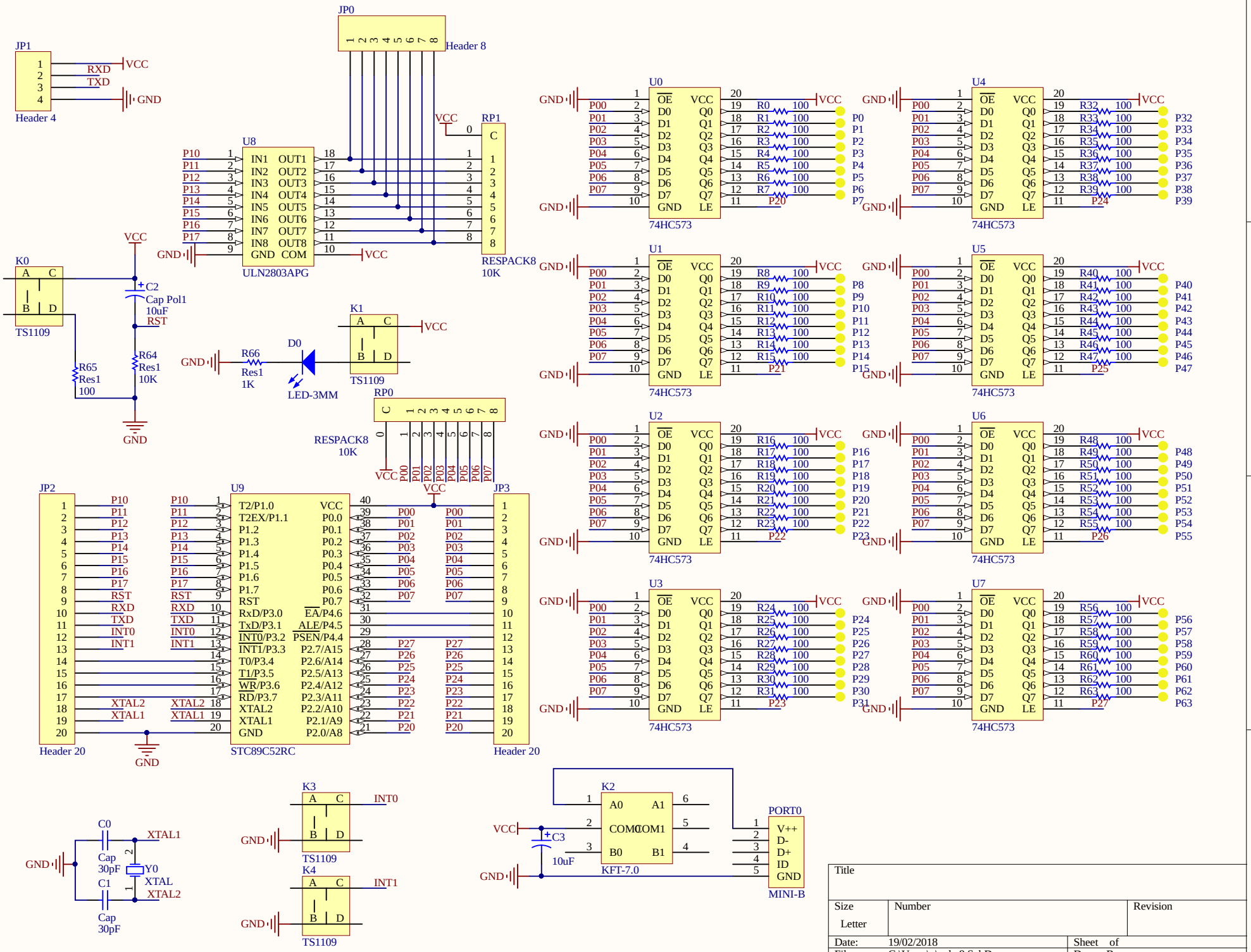
JP1
Header 4
RXD
TXD
VCC
GND
JP0
Header 8
U8
ULN2803APG
RP1
RESPACK8
10K
K0
TS1109
C2
Cap Pol1
10uF
RST
R65
Res1
100
R64
Res1
10K
R66
Res1
1K
D0
LED-3MM
K1
TS1109
RP0
RESPACK8
10K
JP2
Header 20
U9
STC89C52RC
JP3
Header 20
U0
U1
U2
U3
U4
U5
U6
U7
74HC573
K3
TS1109
K4
TS1109
C0
Cap
30pF
C1
Cap
30pF
XTAL1
XTAL2
Y0
XTAL
K2
KFT-7.0
C3
10uF
PORT0
MINI-B
Title
Size
Letter
Number
Revision
Date: 19/02/2018
Sheet of
File: C:\Users\..\cube8.SchDoc
Drawn By: