**Laboratory Report**

**On**

# Design and Simulation of Ring Counter using D Flip-Flop

*(Electronic Circuit Lab)*

**Submitted by**

**Ayushi Rai (2430262)**
**Shivam Vishwakarma(2430267)**
**Naba Kambou (2430263)**

**B. Tech Programme in Electronics and Computer Science Engineering**

**School of Electronics Engineering**
**Kalinga Institute of Industrial Technology, Deemed to be University**
**Bhubaneswar, India**

**2026**

## OBJECTIVE/AIM OF THE EXPERIMENT

The aim of this experiment is to design and analyze a **ring counter circuit using D flip-flops**. The circuit demonstrates sequential shifting of a binary value through flip-flops in a circular manner. The experiment helps in understanding sequential digital circuits and the operation of counters.

## THEORY

A ring counter is a type of sequential circuit constructed using flip-flops connected in a shift register configuration. In this counter, the output of the last flip-flop is fed back to the input of the first flip-flop, forming a closed loop.

The ring counter operates on the principle of Shift Register, where a single logic '1' circulates through the flip-flops with each clock pulse.

In this experiment, D Flip-Flop devices are used. A D flip-flop stores one bit of data and transfers the input value to the output on the triggering edge of the clock signal.

For a 4-bit ring counter:

- Initially only one flip-flop contains logic **1**
- The remaining flip-flops contain logic **0**
- With every clock pulse, the logic **1 moves to the next flip-flop**

Example sequence:

| Clock Pulse | Q1 | Q2 | Q3 | Q4 |
|---|---|---|---|---|
| Initial | 1 | 0 | 0 | 0 |
| 1 | 0 | 1 | 0 | 0 |
| 2 | 0 | 0 | 1 | 0 |
| 3 | 0 | 0 | 0 | 1 |
| 4 | 1 | 0 | 0 | 0 |

Thus, the logic '1' continuously circulates in the circuit, creating a repeating sequence.

Ring counters are commonly used in digital electronics for:

- Sequence generation
- Control circuits
- Timing applications

## REQUIREMENTS

The following components and equipment are required for the experiment:

| Component | Specification | Quantity |
|---|---|---|
| 7474 D Flip-Flop IC | Dual D Flip-Flop | 2 |
| Breadboard | Standard | 1 |
| LED indicators | Output display | 4 |
| Resistors | 330 Ω | 4 |
| Clock generator | Pulse generator | 1 |
| Power supply | +5V DC | 1 |
| Connecting wires | Jumper wires | As required |
| Switch | Input control | 1 |

## CIRCUIT DIAGRAM

The ring counter circuit consists of four **D flip-flops connected in series**. The output of each flip-flop is connected to the input of the next flip-flop. The output of the last flip-flop is connected back to the first flip-flop input, forming a circular path.

All flip-flops receive a **common clock signal**.

**Fig:- Ring Counter Circuit using D Flip-Flops**

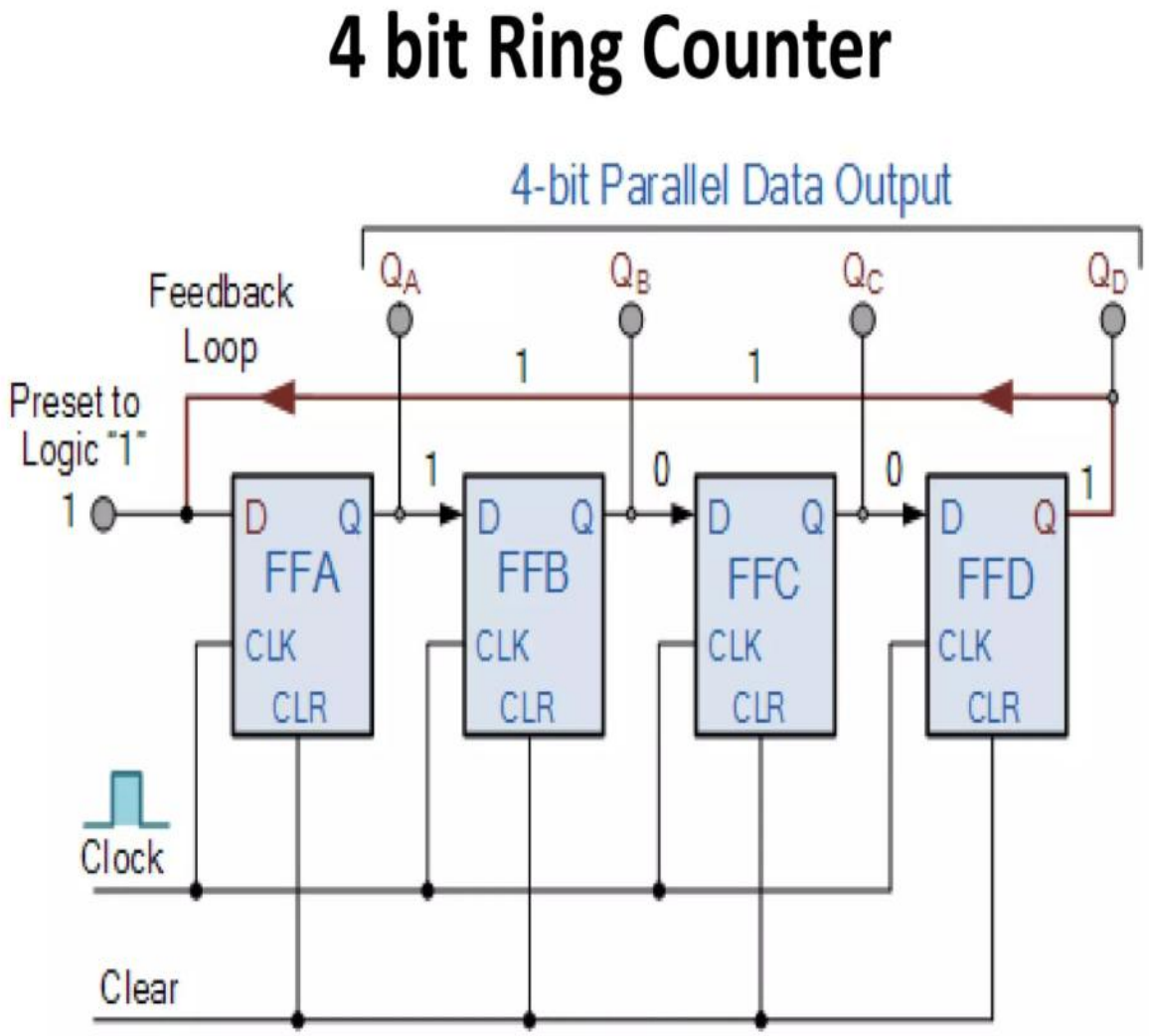

## DESIGN CALCULATIONS

For a ring counter using four flip-flops:

Number of states = **Number of flip-flops**

Therefore:

Number of states = **4**

The output sequence rotates after every clock pulse.

Binary sequence:

1000 → 0100 → 0010 → 0001 → 1000

This cyclic operation ensures continuous shifting of the stored bit.

## OBSERVATIONS / RESULTS

The operation of the ring counter was observed by applying clock pulses and monitoring the outputs of the flip-flops using LED indicators.

| Clock Pulse | Q1 | Q2 | Q3 | Q4 |
|---|---|---|---|---|
| Initial | 1 | 0 | 0 | 0 |
| 1 | 0 | 1 | 0 | 0 |
| 2 | 0 | 0 | 1 | 0 |
| 3 | 0 | 0 | 0 | 1 |
| 4 | 1 | 0 | 0 | 0 |

### Observation Explanation

When a clock pulse is applied, the stored logic value shifts from one flip-flop to the next. The logic **1 moves sequentially through the flip-flops**, creating a circular pattern of outputs.

The LEDs connected to each output indicate the active flip-flop at any given clock pulse.

# DESIGN SOURCE (Verilog Code)

The ring counter was implemented using **Verilog HDL** in Xilinx Vivado.
A 4-bit ring counter circulates a single logic ‘1’ through four flip-flops on every clock pulse.

```
module ring_counter(
    input clk,
    input reset,
    output reg [3:0] q
);

always @(posedge clk or posedge reset)
begin
    if(reset)
        q <= 4’b1000;
    else
        q <= {q[0], q[3:1]};
end

endmodule
```

## Explanation

**clk** → Clock signal

**reset** → Initializes the counter

**q[3:0]** → 4-bit output representing the ring counter state

The output rotates as:

1000 → 0100 → 0010 → 0001 → 1000

**Design source circuit**

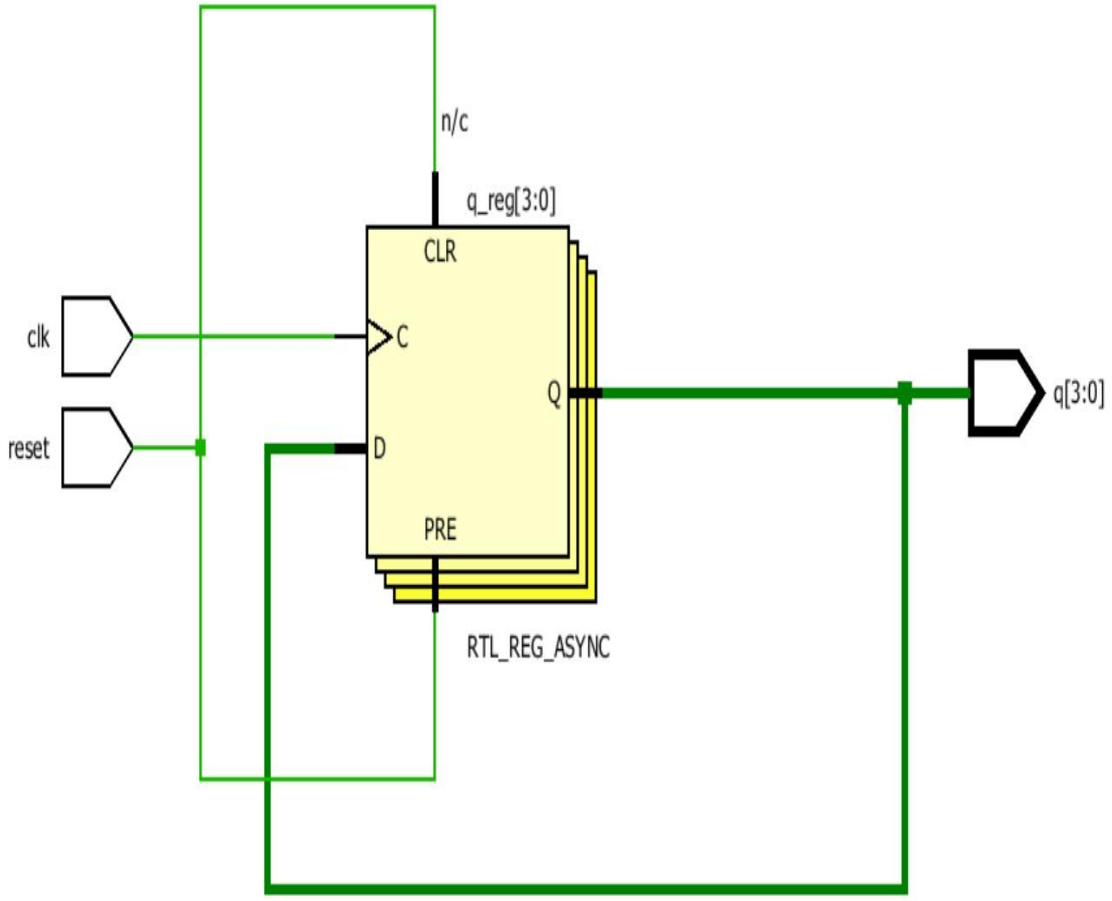


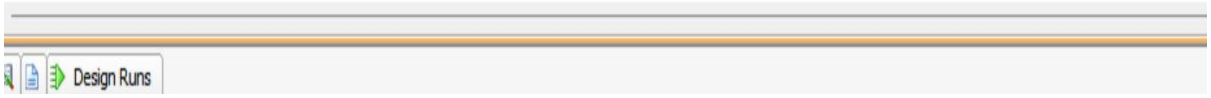

# SIMULATION / TESTBENCH

To verify the design, a **testbench** was written in Xilinx Vivado to generate clock and reset signals.

```
module ring_counter_tb;

reg clk;
reg reset;
wire [3:0] q;

ring_counter uut(
    .clk(clk),
    .reset(reset),
    .q(q)
);

initial begin
    clk = 0;
    forever #5 clk = ~clk;
end

initial begin
    reset = 1;
    #10 reset = 0;
    #100 $finish;
end

endmodule
```

---

# SIMULATION RESULT

The design was simulated using Xilinx Vivado.
The waveform shows the circular shifting of the logic value through the outputs.

| Clock Cycle | Q3 Q2 Q1 Q0 |
|---|---|
| 0 | 1000 |
| 1 | 0100 |
| 2 | 0010 |
| 3 | 0001 |
| 4 | 1000 |

## Waveform Output

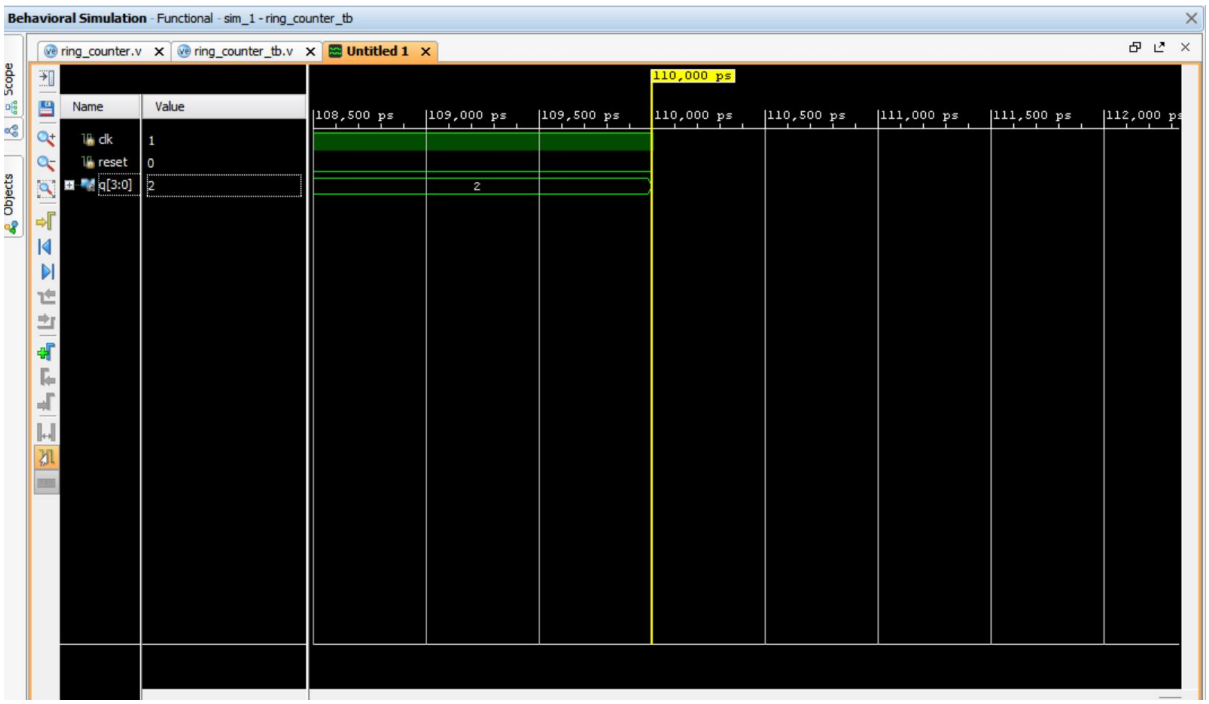


## DISCUSSION OF RESULTS

The results obtained from the design and simulation confirm the correct operation of the ring counter circuit. Each clock pulse shifts the stored bit to the next flip-flop output. After four clock pulses, the sequence repeats from the beginning.

The LED indicators clearly demonstrate the shifting pattern of the stored bit.

The simulation waveform confirms the correct operation of the ring counter. A single logic ‘1’ circulates through the four outputs on each clock pulse. This demonstrates the working principle of sequential circuits implemented using **Verilog HDL**.

## CONCLUSION:

The **ring counter using D flip-flops** was successfully designed, simulated, and tested. The experiment demonstrates the working of sequential digital circuits and the operation of ring counters used in timing and control applications.
The **ring counter** was successfully designed and simulated using Xilinx Vivado. The simulation waveform verifies the correct circular shifting operation of the counter.

## REFERENCES:


- M. Morris Mano, *Digital Logic and Computer Design*, Pearson Education.
- Thomas L. Floyd, *Digital Fundamentals*, Pearson Education.
- Xilinx, *User Guide for* Xilinx Vivado *Design Suite*, Xilinx Documentation.
- Samir Palnitkar, *Verilog HDL: A Guide to Digital Design and Synthesis*, Prentice Hall.


## STUDENT SIGNATURES