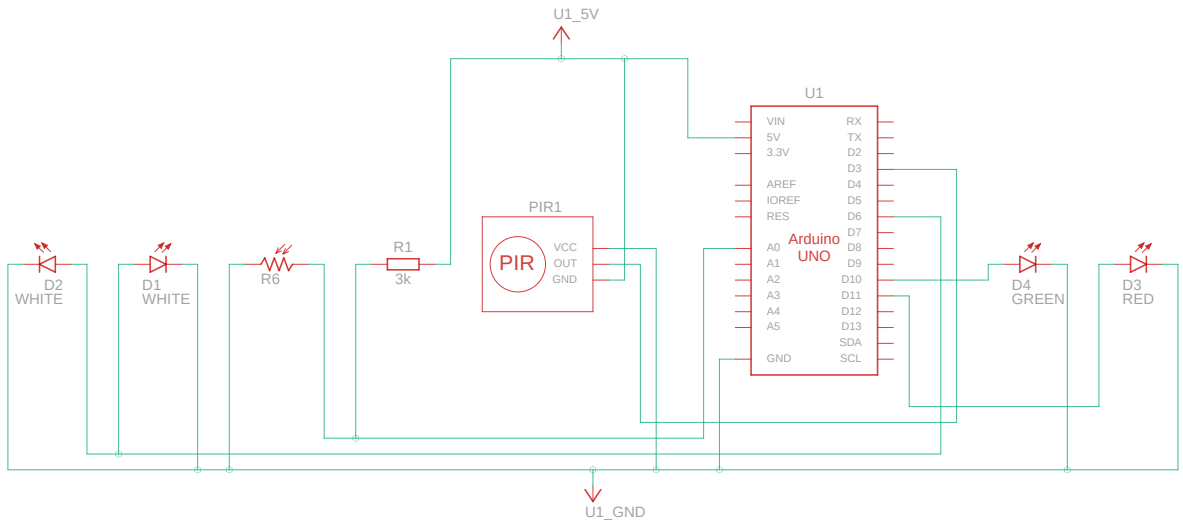

Made with Tinkercad®

Title: Smart Energy Campus	
Date: 18/11/2022, 17:39:11	Sheet: 1/1