HC-05 Data Sheet

Bluetooth to Serial Port Module

1、Overview 2

2、Feature 2

3、Product's picture 2

4、Application fields 4

5、Block diagram 4

6、 PINs description 5

7、AT Command 9

1、Overview

HC-05 module is an easy to use Bluetooth SPP (Serial Port Protocol) module, designed for transparent wireless serial connection setup.

Serial port Bluetooth module is fully qualified Bluetooth V2.0+EDR (Enhanced Data Rate) 3Mbps Modulation with complete 2.4GHz radio transceiver and baseband. It uses CSR Bluecore BC417143 chip. It has the footprint as small as 12.7mmx27mm. Hope it will simplify your overall design/development cycle.

2、Feature

- Sensitivity (Bit error rate) can reach -80dBm,The change range of output's power: -4 - +6dBm.
- Has an EDR module; and the change range of modulation depth: 2Mbps - 3Mbps.
- Has a build-in 2.4GHz antenna; user needn't test antenna.
- Has the external 8Mbit FLASH
- Can work at the low voltage (3.1V~4.2V). The current in pairing is in the range of 30～40mA.
- PIO control can be switched.
- This module can be used in the SMD.
- It's made through RoHS process.
- The board PIN is half hole size.
- Has a 2.4GHz digital wireless transceiver.
- Bases at CSR BC04 Bluetooth technology.
- Has the function of adaptive frequency hopping.
- Small (27mm×13mm×2mm)
- Peripherals circuit is simple.
- It's at the Bluetooth class 2 power level.
- Storage temperature range: -40 ℃ - 85℃， work temperature range: -25 ℃ - +75℃
- Any wave inter Interference: 2.4MHz， the power of emitting: 3 dBm.
- Bit error rate: 0. Only the signal decays at the transmission link, bit error may be produced. For example, when RS232 or TTL is being processed, some signals may decay.

3、Product's picture

HC-05 Data Sheet

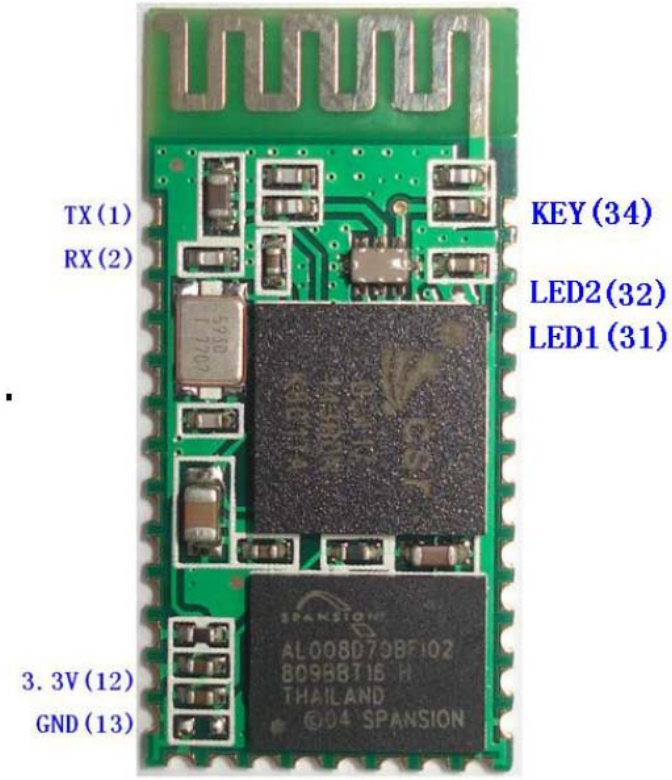

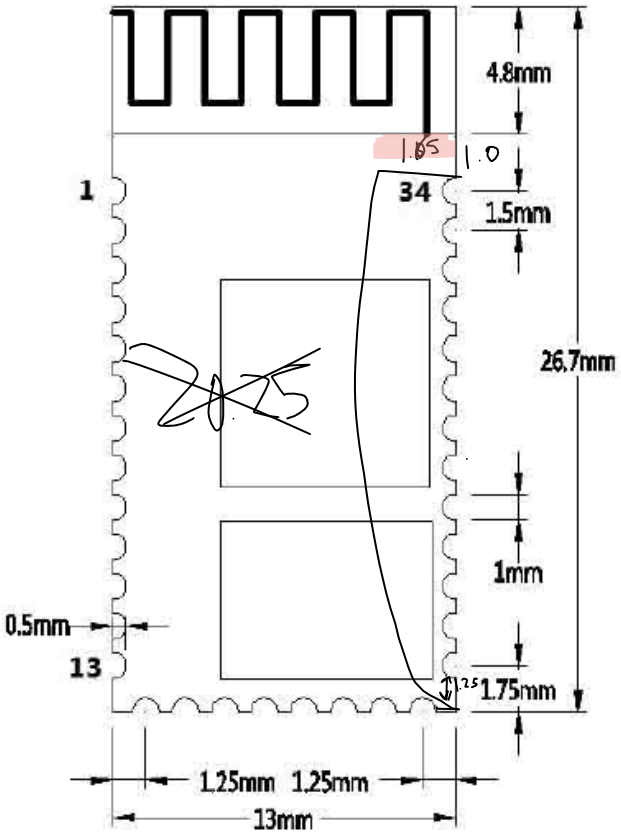

4、Application fields

- Bluetooth Car Handsfree Device
- Bluetooth GPS
- Bluetooth PCMCIA , USB Dongle
- Bluetooth Data Transfer
- Bluetooth Arduino module

5、Block diagram

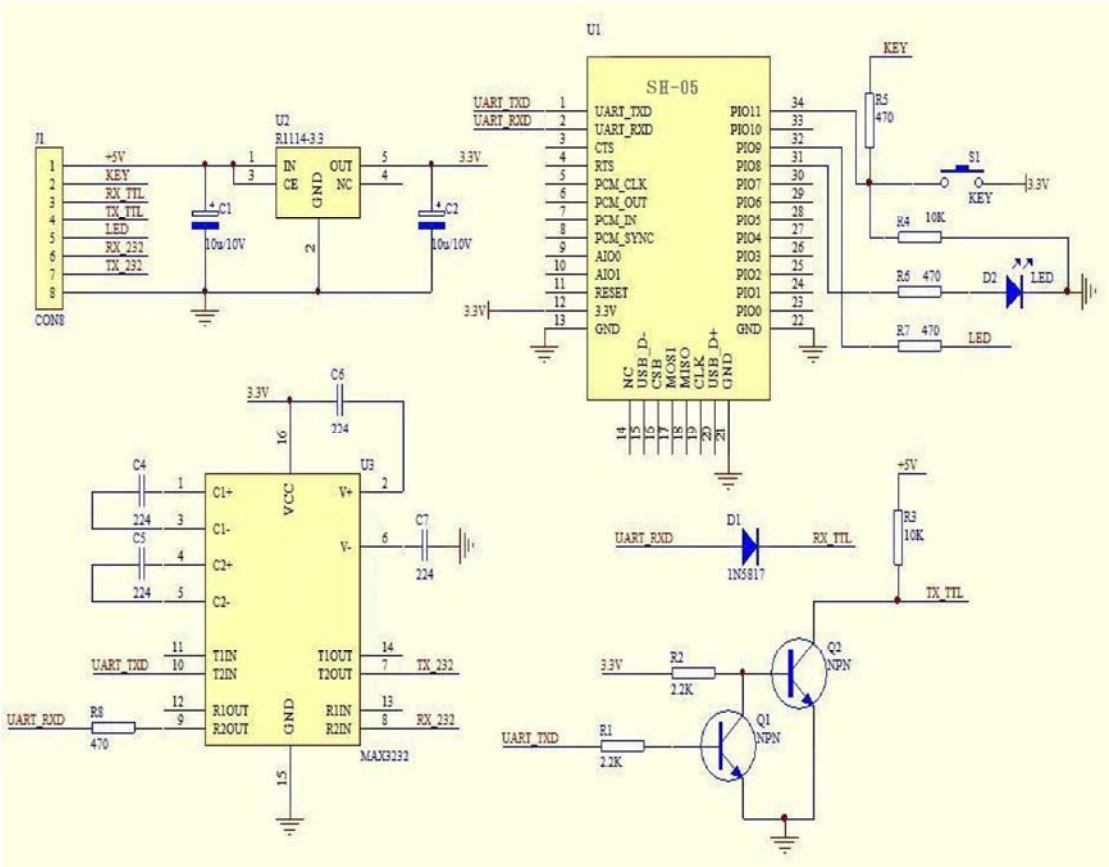

6、 PINs description

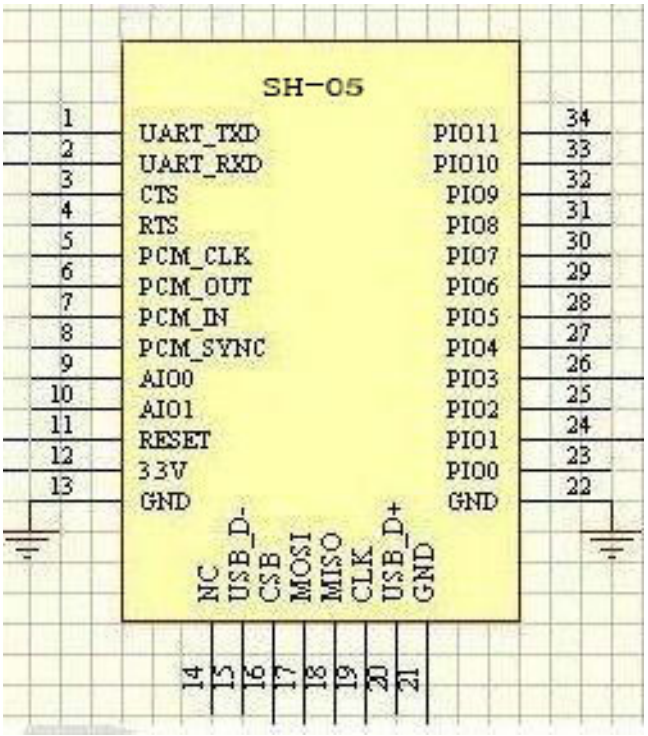

PIN Name	PIN	Pad type	Description	Note
UART_TX	1	CMOS output, Tri-stable with weak internal pull-up	UART Data output	
UART_RX	2	CMOS input with weak internal pull-down	UART Data input	
UART_CTS	3	CMOS input with weak internal pull-down	UART clear to send, active low	
UART_RTS	4	CMOS output, tri-stable with weak internal pull-up	UART r qu st to send, active low	
PCM_CLK	5	Bi-Directional		
PCM_OUT	6	CMOS output		
PCM_IN	7	CMOS Input		
PCM_SYNC	8	Bi-Directional		
AIO0	9	Bi-Directional		
AIO1	10	Bi-Directional		
RESETB	11	CMOS Input with RESETB 11 weak intemal pull-down		

VCC	12	3.3V		
GND	13	VSS	Ground pot	
1V8	14	VDD	Integrated 1.8V (+) supply with On-chip linear regulator output within 1.7-1.9V	
USB_-	15	Bi-Directional		
SPI_CSB	16	CMOS input with weak internal pull-up	Chip select for serial peripheral interface, active low	
SPI_MOSI	17	CMOS input with weak internal pull-down	Serial peripheral interface data input	
SPI_MISO	18	CMOS input with weak internal pull-down	Serial peripheral interface data Output	
SPI_CLK	19	CMOS input with weak internal	Serial peripheral interface clock	
USB_+	20	Bi-Directional		
GND	21	VSS	Ground pot	
GND	22	VSS	Ground pot	
PIO0	23	Bi-Directional RX EN	Programmable input/output line, control output for LNA(if fitted)	

PIO1	24	Bi-Directional TX EN	Programmable input/output line, control output for PA(if fitted)	
PIO2	25	Bi-Directional	Programmable input/output line	
PIO3	26	Bi-Directional	Programmable input/output line	
PIO4	27	Bi-Directional	Programmable input/output line	
PIO5	28	Bi-Directional	Programmable input/output line	
PIO6	29	Bi-Directional	Programmable input/output line	
PIO7	30	Bi-Directional	Programmable input/output line	
PIO8	31	Bi-Directional	Programmable input/output line	LED
PIO9	32	Bi-Directional	Programmable input/output line	LED
PIO10	33	Bi-Directional	Programmable input/output line	
PIO11	34	Bi-Directional	Programmable input/output line	KEY

7、AT Command

More information about command set is provided at hc-05-at-command.pdf.