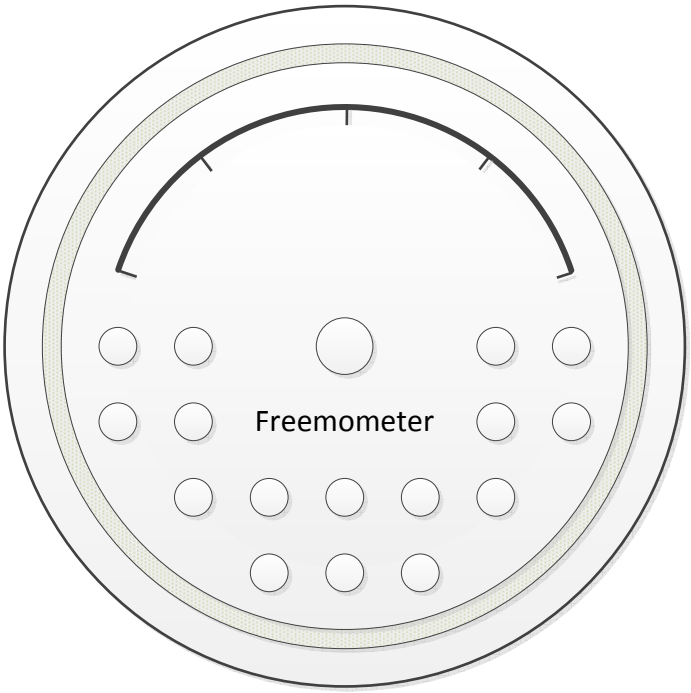
Freemometer

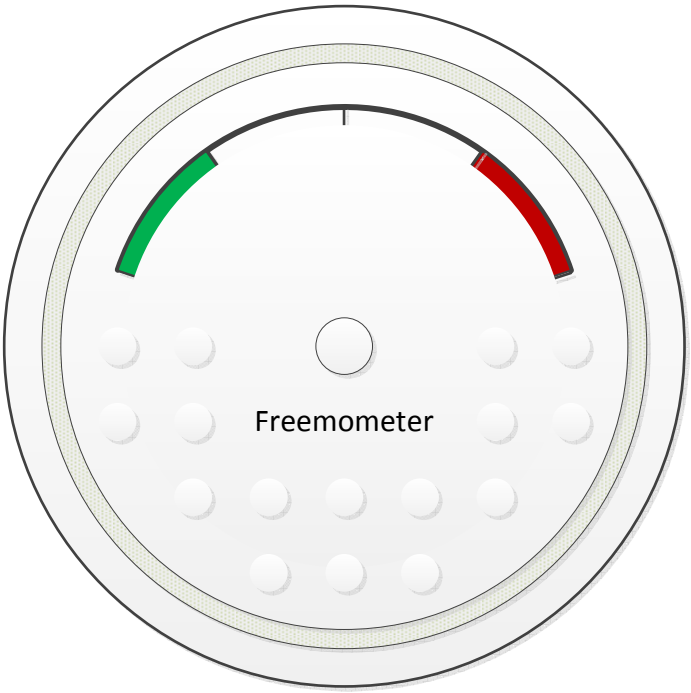
Freemometer

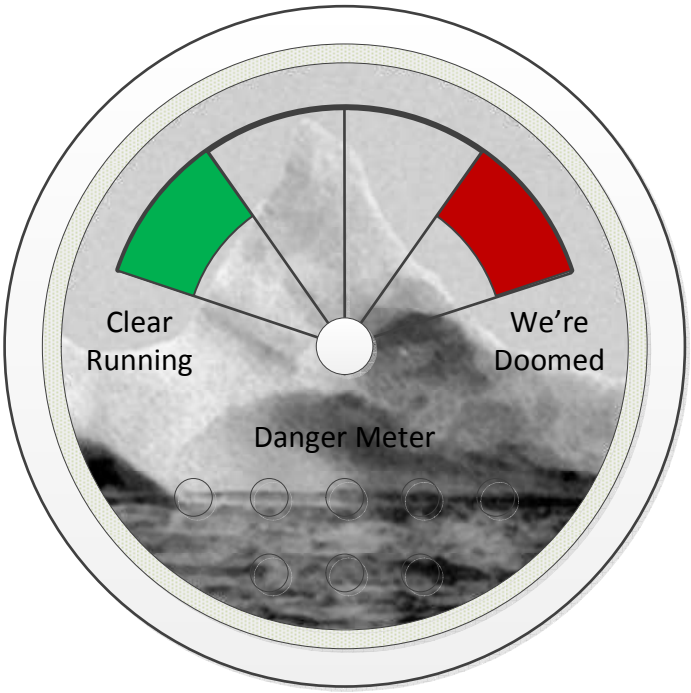
Clear
Running
We're
Doomed
Danger Meter

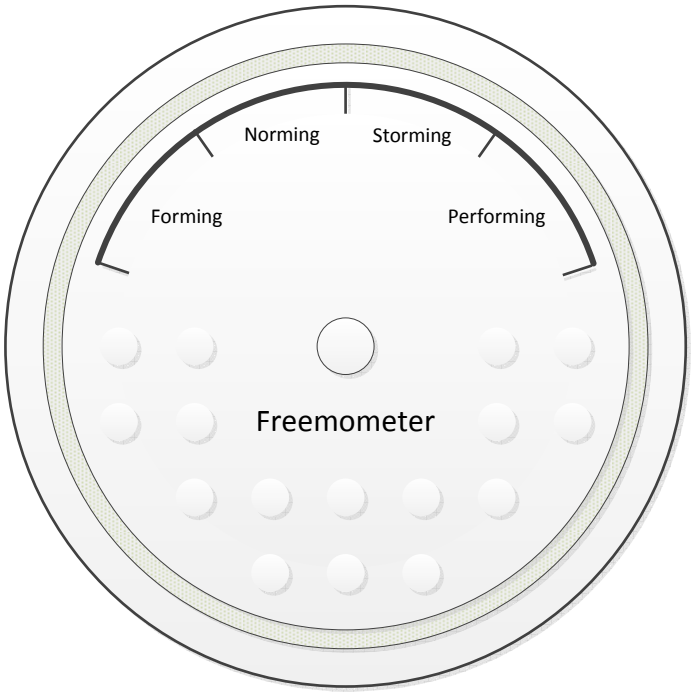
Norming
Storming
Forming
Performing
Freemometer

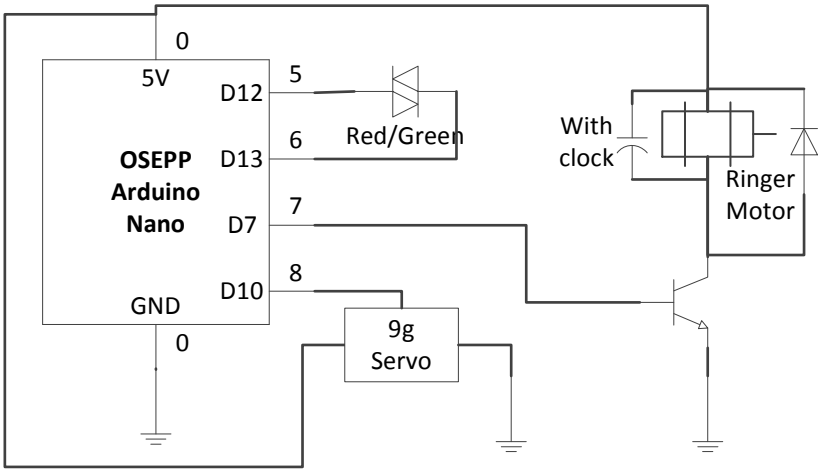
0
5V
D12
5
Red/Green
OSEPP
Arduino
Nano
D13
6
D7
7
D10
8
GND
0
9g
Servo
With
clock
Ringer
Motor

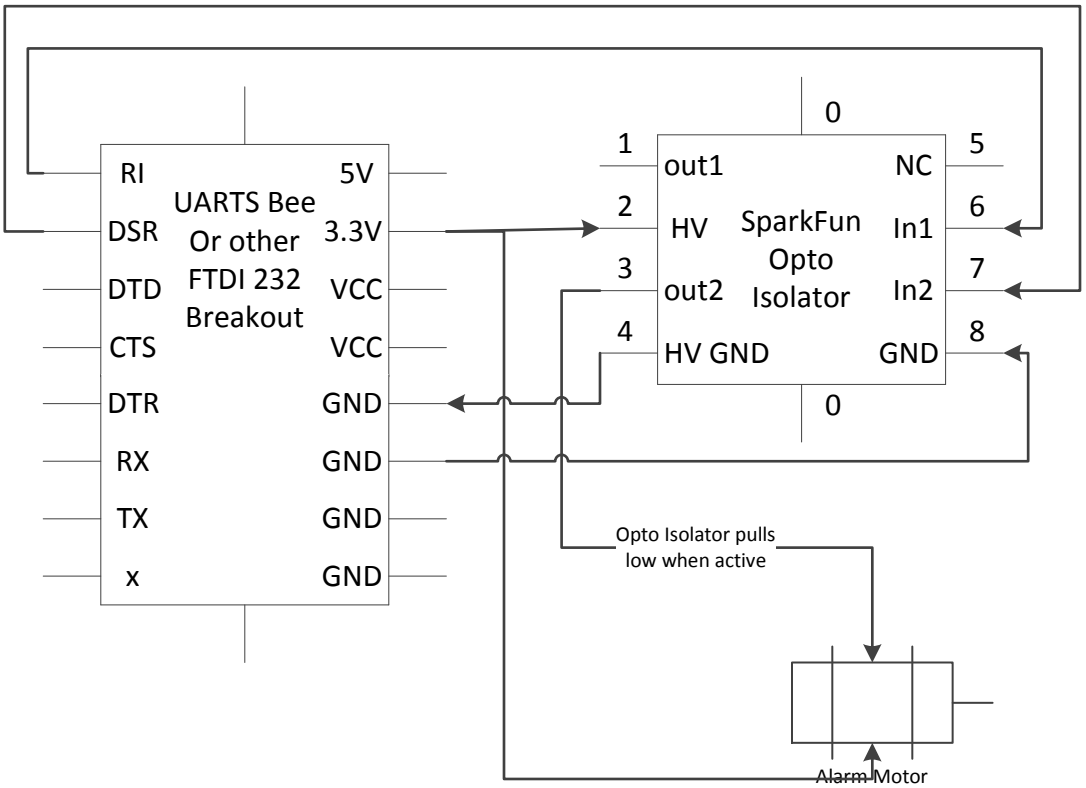
RI
DSR
DTD
CTS
DTR
RX
TX
x
UARTS Bee
Or other
FTDI 232
Breakout
5V
3.3V
VCC
VCC
GND
GND
GND
GND
0
1
out1
NC
5
2
HV
SparkFun
Opto
Isolator
In1
6
3
out2
In2
7
4
HV GND
GND
8
0
Opto Isolator pulls
low when active
Alarm Motor

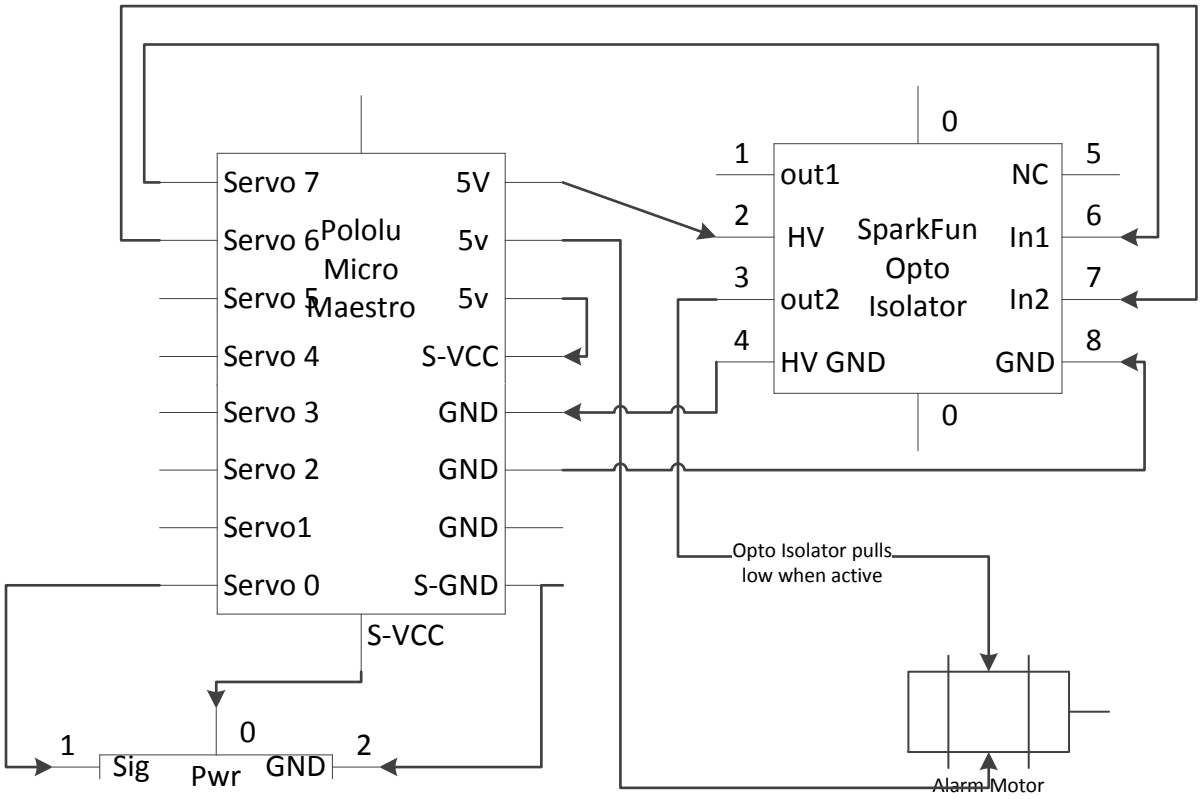
Servo 7
Servo 6
Servo 5
Servo 4
Servo 3
Servo 2
Servo1
Servo 0
Pololu
Micro
Maestro
5V
5v
5v
S-VCC
GND
GND
GND
S-GND
S-VCC
0
1
out1
NC
5
2
HV
SparkFun
Opto
Isolator
In1
6
3
out2
In2
7
4
HV GND
GND
8
0
Opto Isolator pulls
low when active
Alarm Motor
1
Sig
0
Pwr
GND
2

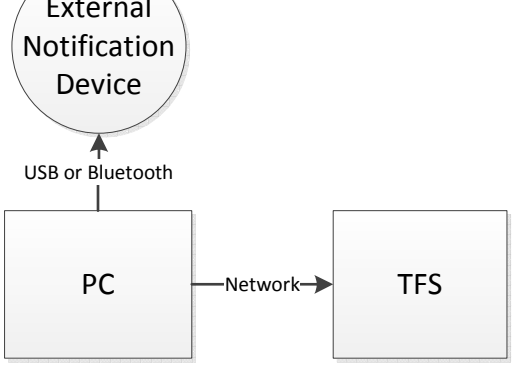
External Notification Device
USB or Bluetooth
PC
Network
TFS

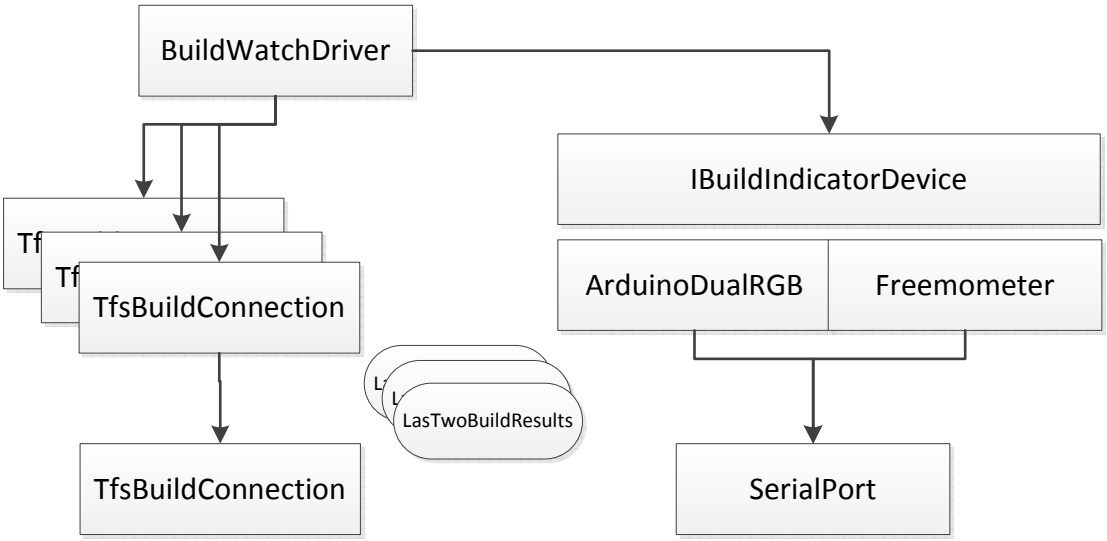
BuildWatchDriver
IBuildIndicatorDevice
TfsBuildConnection
ArduinoDualRGB
Freemometer
LasTwoBuildResults
TfsBuildConnection
SerialPort