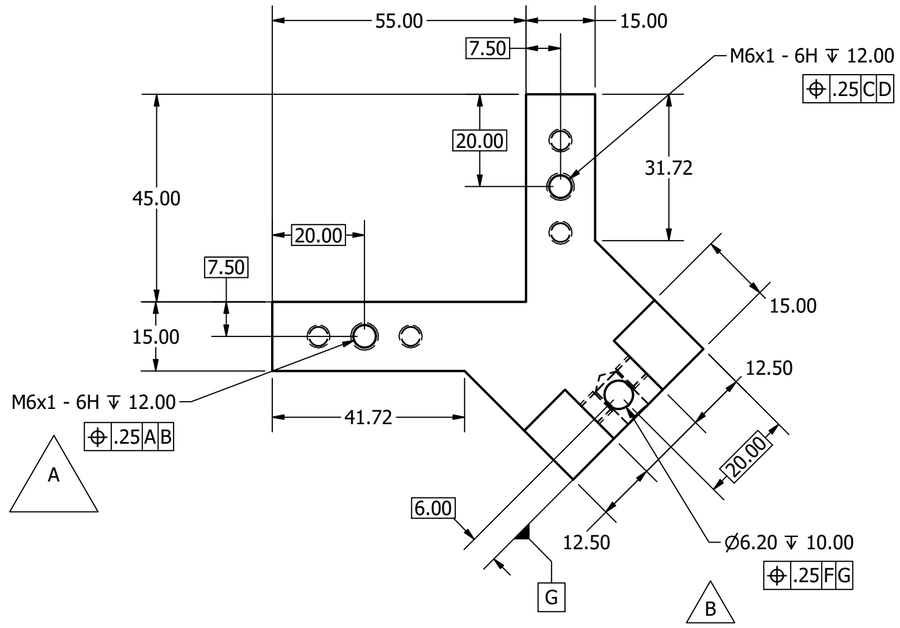

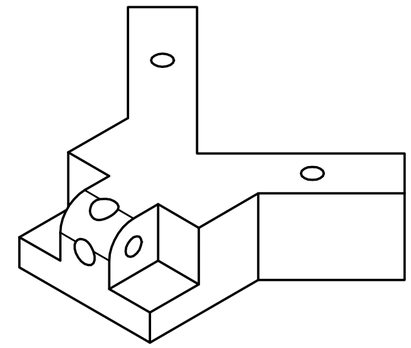

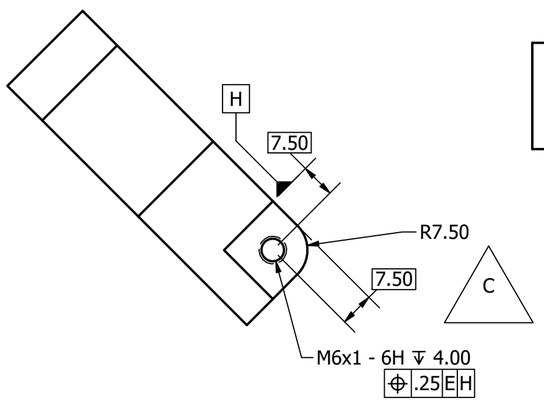

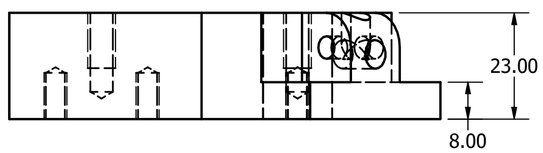

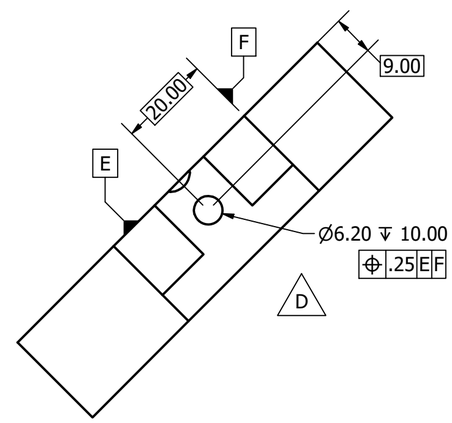

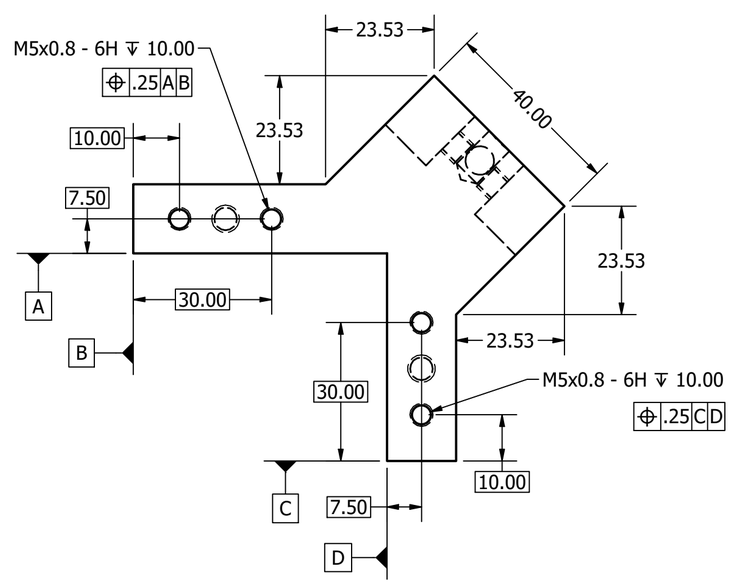

REVISION HISTORY			
REV	DESCRIPTION	DATE	APPROVED
A	Changed hole location to resolve interference with screw hole on opposite surface.	2020-11-30	ML
B	Added hole for locking mechanism. Removed material for interlocking surface between arm and l-bracket.	2020-11-30	EB
C	Added hole for pin. Filleted edge.	2020-11-30	ML
D	Added hole for locking mechanism.	2020-11-30	ML

All dimensions in mm.
All dimensions +/- 0.50 mm unless otherwise specified.

DRAWN MhLan	2020-11-30	Matthew Langendoen, 400030006
CHECKED Group 32		TITLE L Bracket
QA		
MFG		
APPROVED		
SIZE C	DWG NO l_bracket-1	REV D
SCALE 1 : 1		SHEET 1 OF 1