Multi-processor on Moebius

Overview

- Tutorial on highly redundant fault-tolerant multiprocessor system
  - System description
  - Composition model
  - San models
  - Other elements
- Exercise

System Description 1/2

At the highest level, the system consists of multiple computers.

The system is considered operational if at least 1 computer is operational.

Each computer is composed of

- 3 memory modules, of which 1 is a spare
- 3 CPU units, of which 1 is a spare
- 2 I/O ports, of which 1 is a spare
- 2 non-redundant error-handling chips

A computer is operational if:

- at least 2 memory modules are functioning
- at least 2 CPU units are functioning
- at least 1 I/O port is functioning
- the 2 error-handling chips are functioning.

System Description 2/2

Each memory module consists of:

41 RAM chips (2 are spare)

2 non-redundant interface chips.

A memory module is operational if at least 39 of its 41 RAM chips, and its 2 interface chips, are working.

Each CPU unit consists of

6 non-redundant chips.

A CPU unit is operational if all the 6 chips are working

Each I/O port consists of

6 non-redundant chips

An I/O port is operational if all the 6 chips are working

Computer Scheme

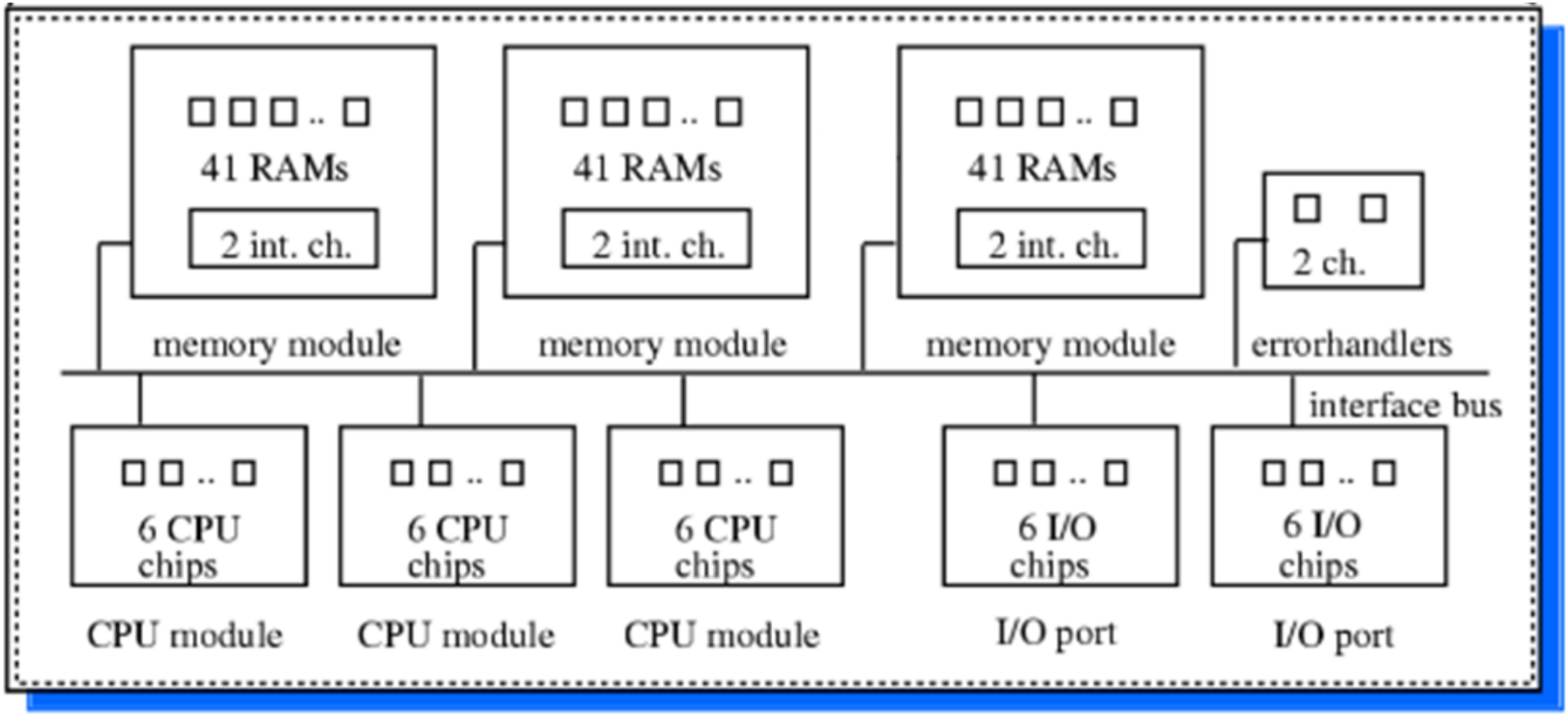

Composition model of the system

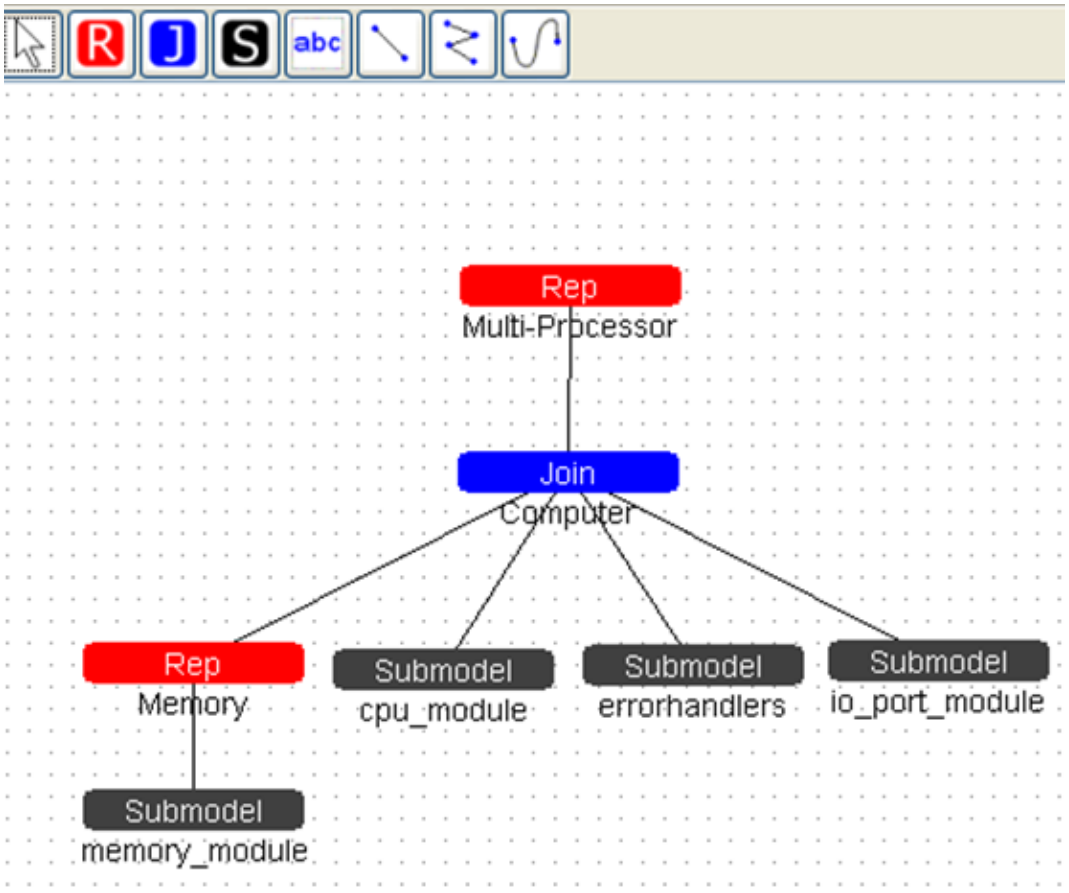

Rep : Repetition of the same submodel

Join : Union of different submodel

A computer is a union of

- 3 different submodels
- the repetition of the memory submodule

The whole system is the repetition of a computer

Study model

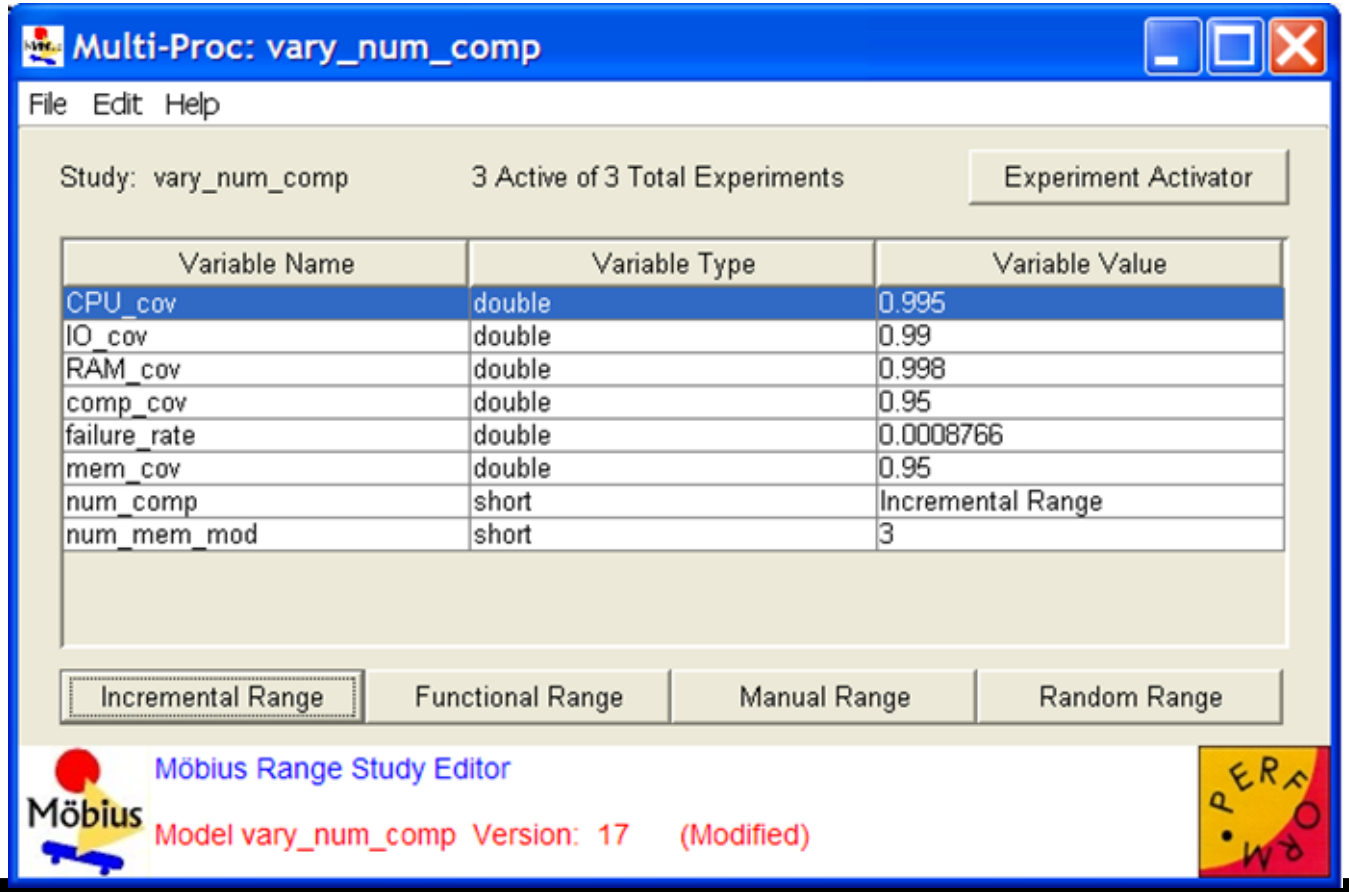

Variable Name	Variable Type	Variable Value
CPU_cov	double	0.995
IO_cov	double	0.99
RAM_cov	double	0.998
comp_cov	double	0.95
failure_rate	double	0.0008766
mem_cov	double	0.95
num_comp	short	Incremental Range
num_mem_mod	short	3

Error handlers Model (Ig_IG1)

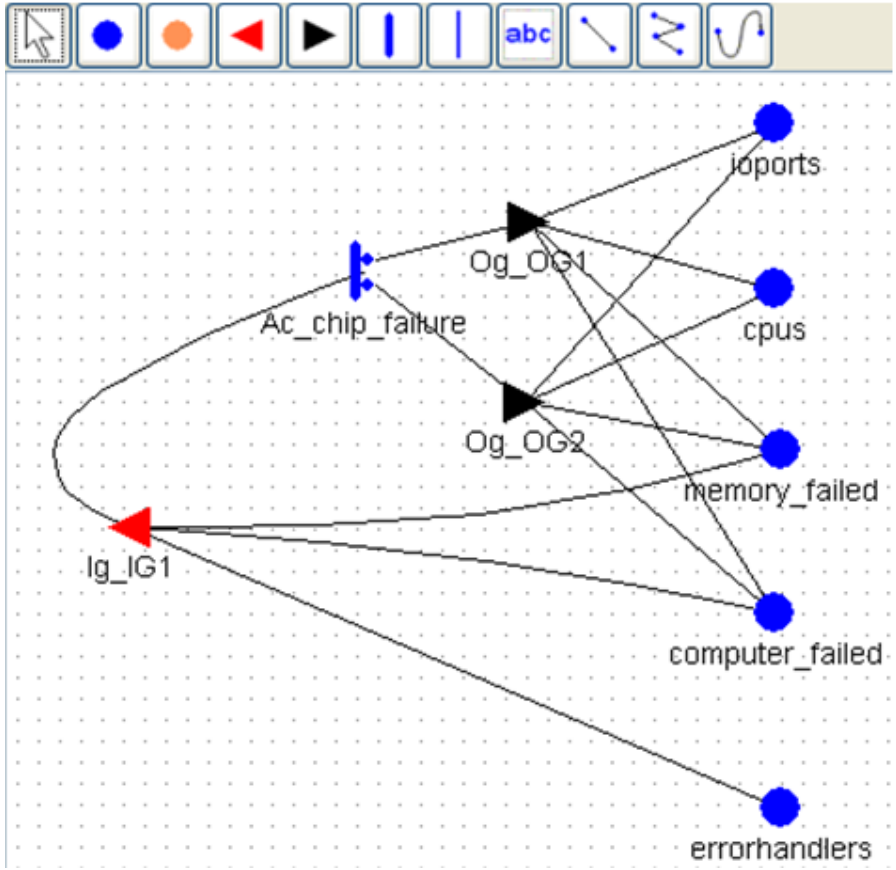

Name: Ig_IG1

Input Predicate

```
(errorhandlers->Mark() == 2) && (memory_failed->Mark() < 2) &&
(computer_failed->Mark() < num_comp)
```

Input Function

```
errorhandlers->Mark() = 0;
```

Error handlers Model(Ac_chip_failure)

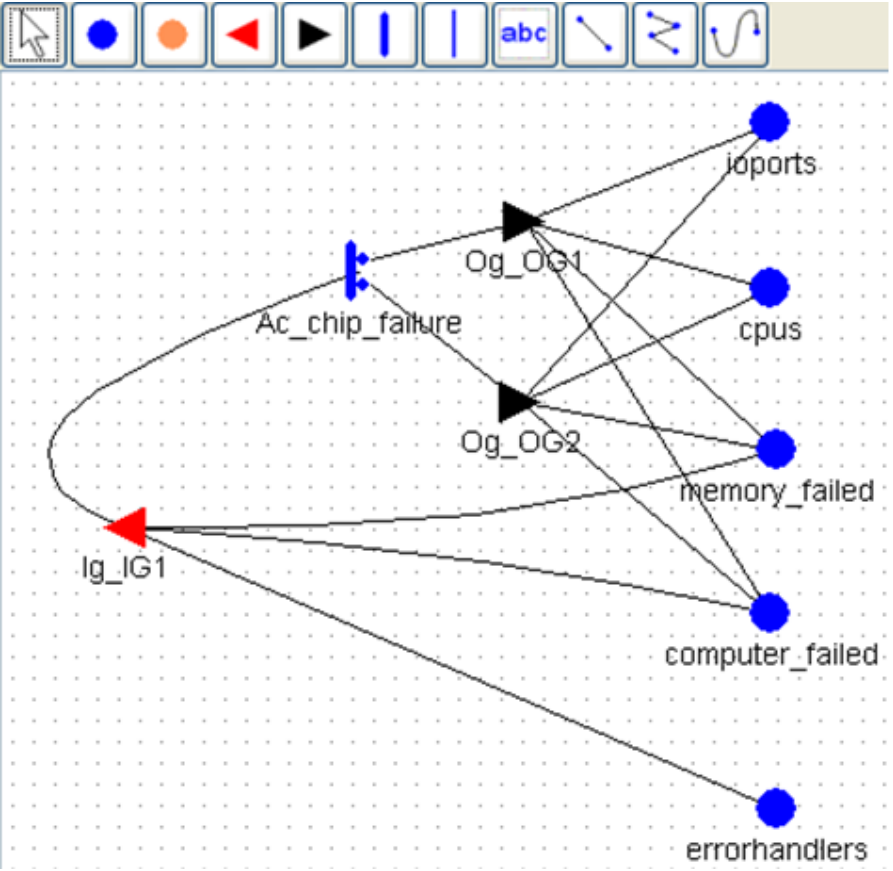

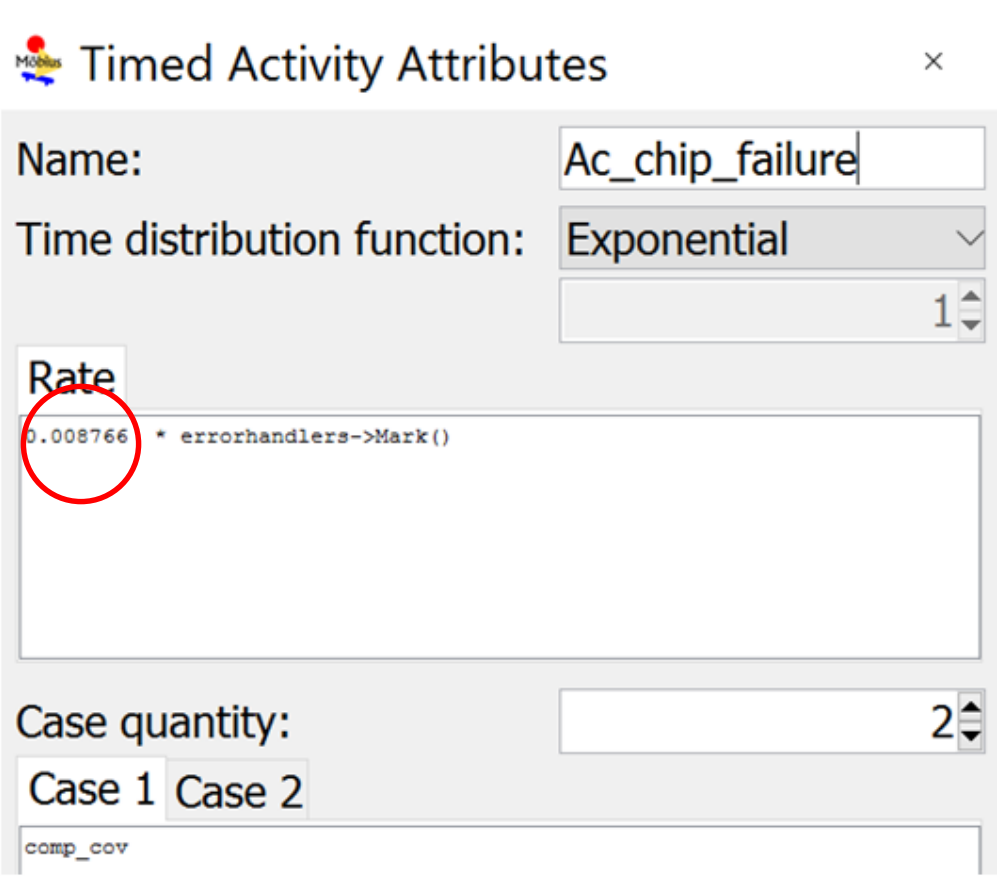

Reward Model

Performance Variables | Model

(Enter new variable name)

Add Variable:

Variable List

unreliability

Variable Name: unreliability

Submodels | Rate Rewards | Impulse Rewards | Simulation

Available State Variables (double click to insert)

cpu_module->cpus
cpu_module->ioports
cpu_module->errorhandlers
cpu_module->memory_failed
cpu_module->computer_failed

Reward Function

```
if (cpu_module->computer_failed->Mark() == num_comp)
{
        return 1.0/num_comp;
}
```

1/num_comp because we are replicating the module num_comp times

Time: Instant of time 20 years

Solver

The State Space Generator is the Flat State Space Generator.

De-activate experiment 3 because it will take too much time

And the Solver used is the Transient Solver

The result for the experiment 2 produced a mean value of 0.01746523

Exercises

Evaluate the reliability of the system and assess that it is 1-unreliability

Evaluate the numerical solution of the unreliability

References

https://www.mobius.illinois.edu/wiki/index.php/Fault-Tolerant_Multiprocessor_Model

https://www.mobius.illinois.edu/wiki/index.php/Möbius_Documentation

Thanks to prof. Andrea Domenici for previous version of the slides.